Series 2, Canopy Extractor, 53 cm, Stainless steel
DLN53AA50

D

LED Light

Made in Europe · Quality from Bosch

DWZ0IN0A0 Standard odor filter (replacement)
DWZ0IN0T0 Standard recirculation kit

The canopy cooker hood: offers you flexibility in your kitchen planning - mount it either on the wall or above a kitchen island.

- **Silence**: maximal extractor performance with little noise
- **Metal Grease Filter**: cleans the air, captures grease, easy monthly clean-up.

Typology:	Built-in/Built-under
Length electrical supply cord:	150 cm
Required niche size for installation (HxWxD):	208 x 493.0 x 257 mm
Height of the appliance:	208 mm
Minimum distance above an electric hob:	550 mm
Minimum distance above a gas hob:	650 mm
Net weight:	4.5 kg
Type of control:	mechanical
Number of speed settings:	3
Max. air extraction:	302 m^3/h
Max. air recirculation:	300 m^3/h
Maximum Air flow:	302 m^3/h
Number of lights:	2
Noise level:	62 dB(A) re 1 pW
Diameter of air outlet:	120 mm
Grease filter material:	Washable aluminium
EAN code:	4242005124893
Connection rating:	121 W
Fuse protection:	KSA A
Voltage:	220-240 V
Frequency:	50 Hz
Plug type:	South Africa plug
Installation typology:	Built-in

4 242005 124893

Series 2, Canopy Extractor, 53 cm, Stainless steel
DLN53AA50

The canopy cooker hood: offers you flexibility in your kitchen planning - mount it either on the wall or above a kitchen island.

- Energy Efficiency Class: D*
- Average Energy Consumption: 67.7 kWh/year*
- Blower Efficiency Class: E*
- Lighting Efficiency Class: D*
- Grease Filtering Efficiency Class: D*
- Noise max. Normal Level: 62 dB*

Measures:

- Canopy hood
- Suitable for ducted or recirculating operation
- Recirculating kit
- Sliding switch control for extractor speeds and light
- 3 speed operation
- Single motor
- Removable metal grease filters, dishwasher safe
- 2 x 4 W LED 3W E14
- Light Intensity: 78 lux
- Colour Temperature: 2700 K
- Ducted extraction rate according to DIN/EN 61591: max. 302 m^3/h
- Max. extraction rate: 302 m3/h
- Dimensions (HxWxD): 208 x 534 x 300 mm
- built-in dimensions (HxWxD): 208 x 493 x 257 mm
- Power rating: 121 W
- 120 mm diameter pipe

Series 2, Canopy Extractor, 53 cm, Stainless steel
DLN53AA50

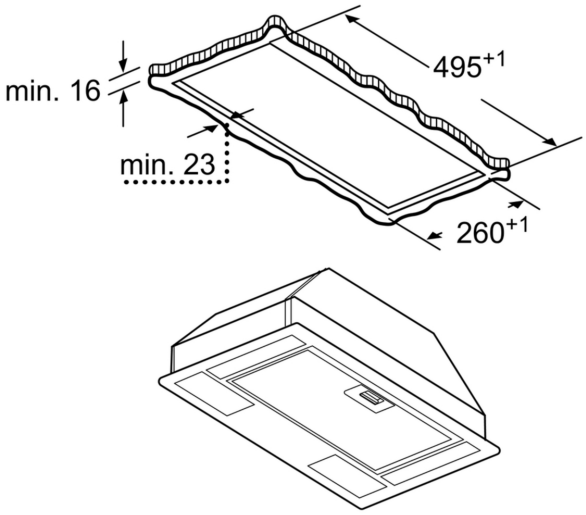

measurements in mm

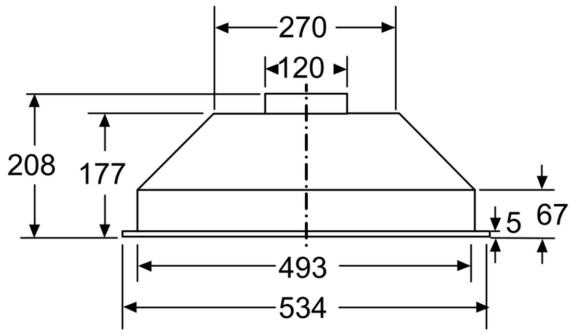

measurements in mm

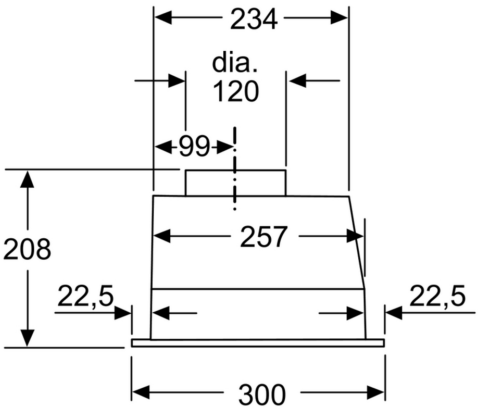

measurements in mm

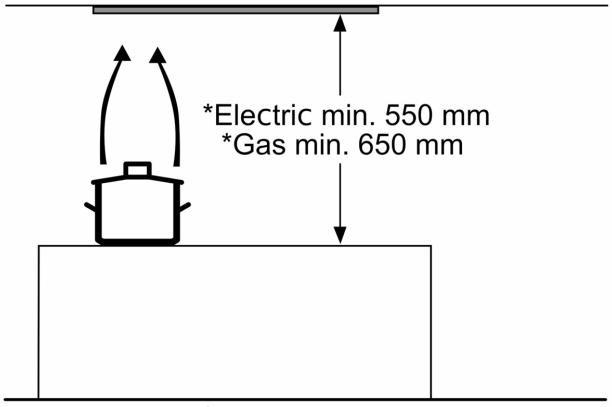

* from upper edge of pan support

measurements in mm