500 Series, French Door Bottom Mount Refrigerator, 36", Black Stainless Steel
B36FD52SNB

- **QuickIce Pro System™ for fast ice**
- **Spacious Standard Depth**
- **Bottle Fill for a hands-free filling experience**
- **UltraClarityPro® Water Filter**
- **Maintain temperature with MultiAirFlow**

UPC code:	825225970774
Color:	Black Stainless Steel
Panel Ready:	Not Possible
Silence Level:	40 dBA
Fuse protection:	10 A
Volts:	110-120 V
Frequency:	60 Hz
ENERGY STAR® certified:	Yes
Power Cord Length:	66 15/16
Plug Type:	120V-3 prong
Required Cutout Size (HxWxD) (in):	70 x 36 x 25
Product Packaging Dimensions (HxWxD):	73.03 x 39.29 x 35.98
Total Unit Gross Capacity - AHAM:	26.0 Cu Ft
Refrigerator Gross Capacity:	18.0 Cu Ft
Freezer Gross Capacity:	8.0 Cu Ft
Net Weight:	328.000 lbs
Gross Weight:	355.000 lbs

4 242005 417285

BORPLFTR55	Ultraclarity PRO water filter
FPETHKT50	Fresh Protect Ethylene Starter Kit
FPETHRF50	Fresh Protect Ethylene Refill Kit

500 Series, French Door Bottom Mount Refrigerator, 36", Black Stainless Steel
B36FD52SNB

Measurements in inches (mm)

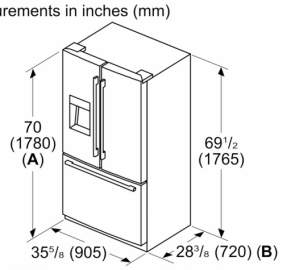

A: Add 1/4" (6 mm) with front leveling feet fully extended

B: Add 1" (25 mm) for fixed spacers on back

Measurements in inches (mm)

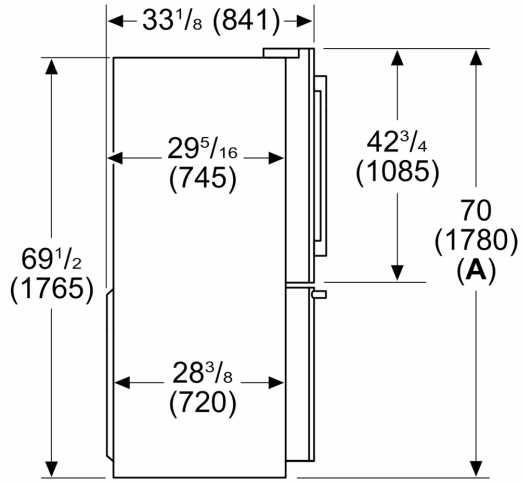

A: Add 1/4" (6 mm) with front leveling feet fully extended

Measurements in inches (mm)

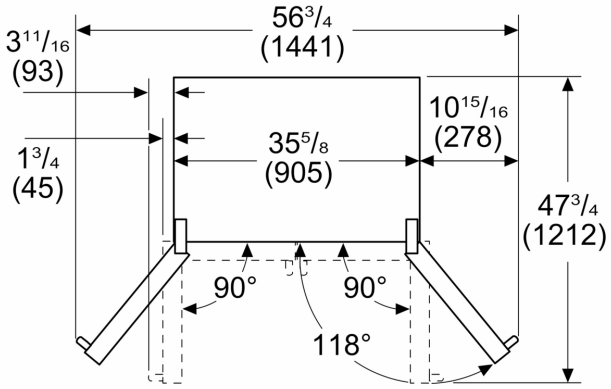

Drawers can be pulled out with door open to 90°
Drawers can be taken out with door completely opened

measurements in inches (mm)

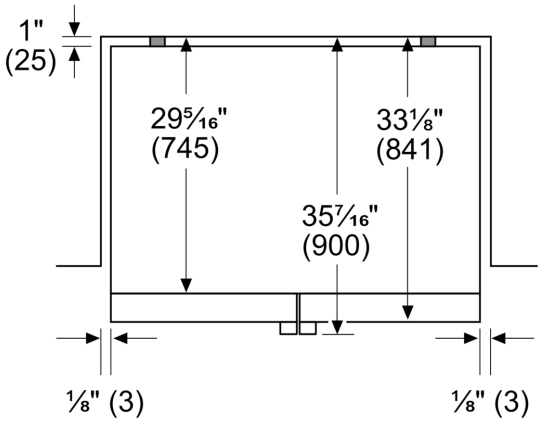

measurements in inches (mm)

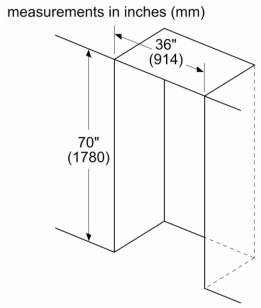

Leave ½" (12.7) gap at the top and 1" (25.4) behind the refrigerator for proper ventilation.

It is recommended that you do not install the refrigerator near a heat source such as a stove or a range.