Serie | 4, Semi-integrated dishwasher, 45 cm, Stainless steel
SPI50E95EU

The ActiveWater 45cm dishwasher with extra space for large and bulky items.

- **7-Segment Display:** indicates remaining time and standard info, such as re-fill status.
- **Height-adjustable top basket:** Allows more flexibility to move the upper basket to accommodate all types and sizes of dishes
- **EcoSilence Drive:** Revolutionary technology to generate a powerful, durable, quiet and efficient wash
- **AquaStop:** Ensures 100% protection from water damage for the entire life of the appliance
- **10-year guarantee:** our convincing promise of quality against rusting of the inner tub.

Technical Data

Energy Efficiency Class (Regulation (EU) 2017/1369): F
Energy Consumption for 100 cycles Eco Programme (EU 2017/1369): 78 kWh
Maximum number of place settings (EU 2017/1369): 9
The water consumption of the eco programme in liters per cycle (EU 2017/1369): 9.5 l
Programme duration (EU 2017/1369): 3:15 h
Airborne acoustical noise emissions (EU 2017/1369): 46 dB(A) re 1 pW
Airborne acoustical noise emission class (EU 2017/1369): C
Cleaning performance: A
Water consumption: 9.5 l
Total annual energy consumption 220 days: 172 kWh
Total annual water consumption 220 days: 2090 l
Built-in / Free-standing: Built-in
Removable top: No
Door panel options: Not possible
Height of removable worktop: 0 mm
Height of the product: 815 mm
Adjustable feet: Yes - all from front
Maximum adjustability feet: 60 mm
Net weight: 31.027 kg
Gross weight: 32.8 kg
Connection Rating: 2400 W
Fuse protection: 10 A
Voltage: 220-240 V
Frequency: 50; 60 Hz
Approval certificates: CE, VDE
Length electrical supply cord: 175 cm
Plug type: Gardy plug w/ earthing
Length inlet hose: 165 cm
Length outlet hose: 205 cm
Hidden heating element: Yes
Water protection system description: Triple water protection 24h
Child saftety devices: No
Water softener: Yes
Top basket type: low
Adjustable upper basket: Single
Bottom basket type: low
3rd Rack: None
Cutlery Basket: Standard
Optional accessories: SGZ1010, SGZ3003, SMZ1051EU, SMZ5000, SMZ5003, SMZ5005, SMZ5300
Included accessories 2: vapor barrier plate
Number of place settings: 9
Color / Material panel: Stainless steel, metallic
Color / Material body: Lacquered
Dimensions of the product (HxWxD): 815 x 448 x 573 mm
Dimensions of the packed product (HxWxD): 880 x 670 x 500 mm

Serie | 4, Semi-integrated dishwasher, 45 cm, Stainless steel
SPI50E95EU

The ActiveWater 45cm dishwasher with extra space for large and bulky items.

Features

- Easy Clean Filter System
- Dosage Assist Basket ensures the tablets are dissolving properly
- BLDC Motor
- 2 bent spray arms in upper basket
- Aqua Sensor, Load Sensor
- Heat exchanger.
- Alternating spray
- Full Electronic Control
- Inner Tub: Stainless Steel
- Glass Care System

Specification

- Dimension (WxHxD): 44.8 x 81.5 x 57.3 cm

Programmes

- 5 programmes:
  Intensive 70 °C, Auto 45-65 °C, Eco 50 °C, Quick wash 45 °C, Pre-Rinse
- 2 Special Options: Intensive Zone, Vario Speed
- Time Delay: 1 - 24 hours
- LED Salt Refill Indicator
- LED Rinse Aid Refill Indicator
- Programme Selector with Integrated Start Button
- Remaining programme time indicator (mins)
- 3-fold corrugated filter

Baskets and Racks

- Vario Basket System
- Adjustable upper rack: Single
- 2 Foldable Plate Racks in Bottom Basket
- Cutlery rack in top basket
- Cutlery basket LR: variable small

Safety

- Aqua Stop - Prevent Water Leakage
- Door Latch

Serie | 4, Semi-integrated dishwasher, 45 cm, Stainless steel
SPI50E95EU

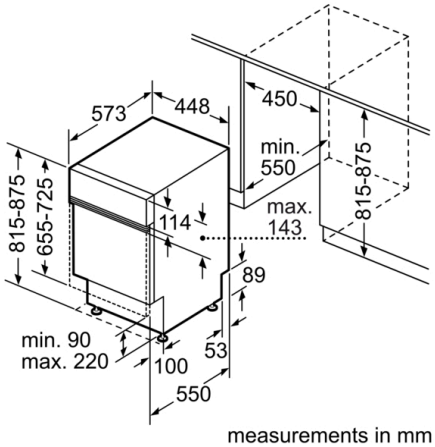
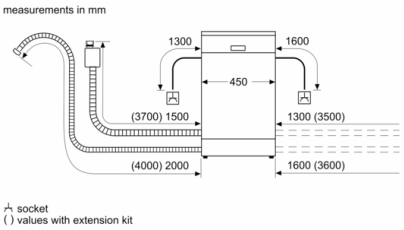
measurements in mm