Series 4, integrated rangehood, 75 cm, Silver metallic
DHL755BAU

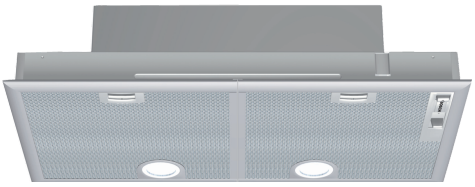

LED Light

DHZ7305	Standard odor filter
DHZ7402	Installation kit for canopy

The canopy cooker hood: offers you flexibility in your kitchen planning - mount it either on the wall or above a kitchen island.

- **Especially silent**: maximum rangehood performance with minimal noise.

Typology: ..... Built-in/Built-under
Length electrical supply cord: ..... 130.0 cm
Min. required niche size for installation (HxWxD): 255mm x 700.0mm x 350mm mm
Minimum distance above an electric hob: ..... 600 mm
Minimum distance above a gas hob: .....650 mm
Net weight: .....8.0 kg
Type of control: .....mechanical
Number of speed settings: ..... 3-stages + intensive setting
Max. air extraction: ..... 379 m^3/h
Boost position output recirculating: .....408.0 m^3/h
Max. air recirculation: ..... 278 m^3/h
Boost position air extraction: ..... 638 m^3/h
Number of lights: 2
Noise level: .....56 dB(A) re 1 pW
Diameter of air outlet: ..... 150 / 120 mm
Grease filter material: .....Washable aluminium
EAN code: 4242002721651
Connection rating: ..... 206 W
Fuse protection: .....10 A
Voltage: .....220-240 V
Frequency: ..... 50 Hz
Plug type: ..... AU plug
Installation type: .....Built-in

4 242002 721651

Series 4, integrated rangehood, 75 cm, Silver metallic
DHL755BAU

The canopy cooker hood: offers you flexibility in your kitchen planning - mount it either on the wall or above a kitchen island.

Design

- Appliance colour: silver metallic
- 73 cm, Integrated Rangehood
- Suitable for ducted or recirculating operation

Convenience

- 3 power settings plus intensive setting
- Push Button controls for power and light
- 2 dishwasher-safe metal grease filters
- Perforated stainless steel filter covers
- Powerful twin motor

Technical Information

- 2 x LED lighting
- 206 W total connected load
- Extraction rate according to EN 61591:
- Min:198.9m³/h
- Intensive:638 m³/h
- Extraction rate exhaust air according to EN 61591:
- max. normal use379 m³/h, intensive 638 m³/h
- 120 or 150mm tube connected diameter
- Noise level according to EN 60704-3 und EN 60704-2-13 exhaust air:
- Max. normal use:56 dB(A) re 1 pW sound pressure:43dB(A)
- Intensive:68 dB(A) re 1 pW (55 dB(A) re 20 µPa sound pressure)

Series 4, integrated rangehood, 75 cm, Silver metallic
DHL755BAU

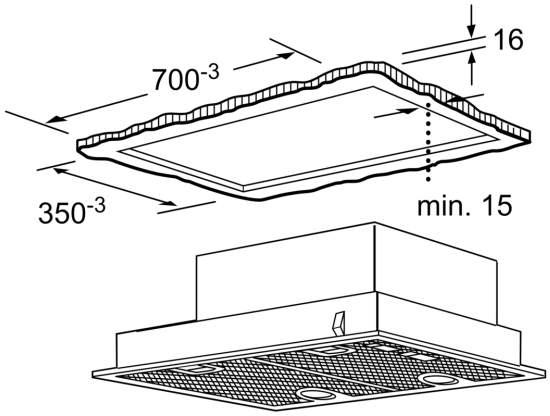

measurements in mm

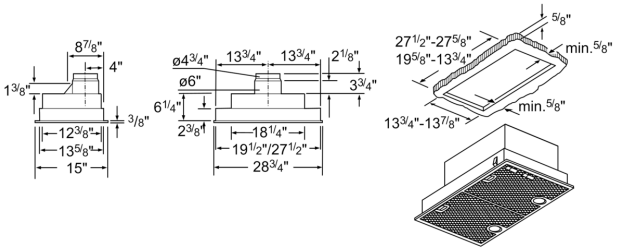

measurements in inches

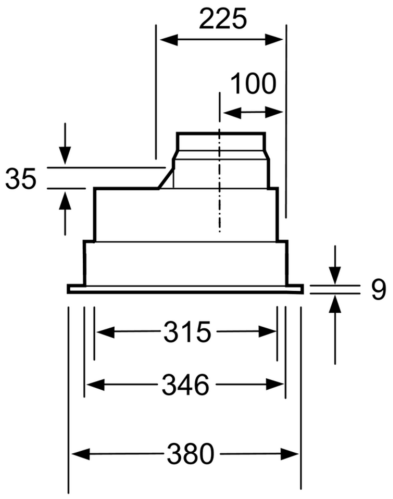

measurements in mm

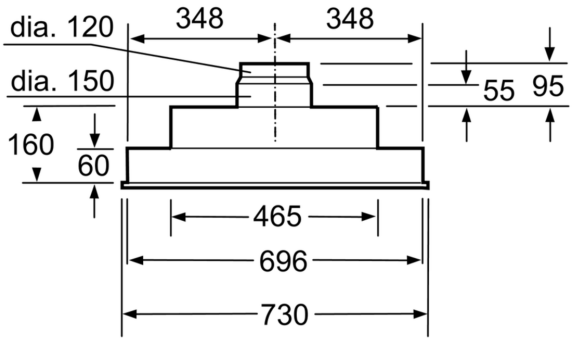

measurements in mm

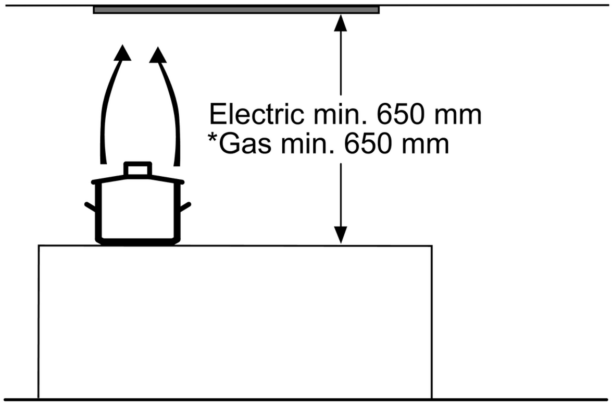

* from upper edge of pan support

measurements in mm