## Series 4, Induction Hob, 60 cm, surface mount without frame PID631BB5E

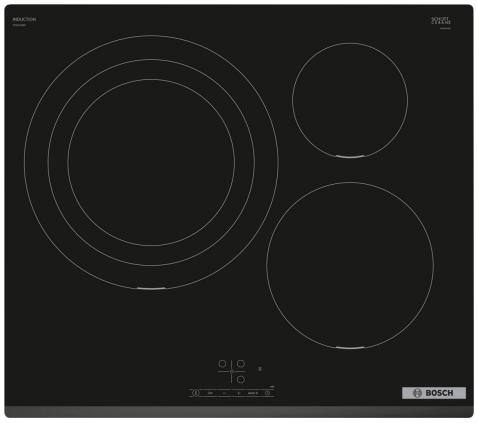

HEZ9SE040 4 pieces Set
HEZ9SE060 6 pieces Set

## The induction hob: cook fast, clean and safely

- **17 Power Levels for Each Cooking Zone**
- **Touch Select**: selection of the desired cooking zone and easy setting of the desired power level.
- **Front Bevel**: Elegant, appealing design with bevelled front.
- **Power Boost**: up to 35% faster heating compared to highest power level.
- **Quick Start**: start straight away and select the desired cooking level.

Product name/family: ..... Cooking zone ceramic
Built-in / Free-standing: ..... Built-in
Energy input: ..... Electric
Total number of positions that can be used at the same time: ..... 3
Required niche size for installation (HxWxD): 51 x 560-560 x 490-500 mm
Width of the appliance: ..... 592 mm
Dimensions (HxWxD): ..... 51x592x522 mm
Dimensions of the packed product (HxWxD): ..... 126x753x603 mm
Net weight: ..... 13.0 kg
Gross weight: ..... 14.1 kg
Residual heat indicator: ..... Separate
Location of control panel: ..... Front
Basic surface material: ..... Ceramic
Color of surface: ..... Black
Length electrical supply cord: ..... 110 cm
Sealed Burners: ..... No
Heating with booster: ..... All
Power of 2nd heating element (kW): ..... 2200.0 ; 2600.0 ; 3300.0 W
Power of 5th heating element (kW): ..... 1400.0 W
Power of 5th heating element (kW in boost): ..... [2.2] kW
Connection rating: ..... 7400 W
Fuse protection: ..... GENERAL.N_A A
Voltage: ..... 220-240 V
Frequency: ..... 50; 60 Hz
Energy input: ..... Electric
Gas type preset: ..... Not applicable
Plug type: ..... no plug
Appliance Dimensions (h x w x d) (in): ..... x x
Dimensions of the packed product: ..... 4.96 x 23.74 x 29.64
Net weight: ..... 29.000 lbs
Gross weight: ..... 31.000 lbs
Total number of positions that can be used at the same time: ..... 3
Length electrical supply cord: ..... 110 cm
Required niche size for installation (HxWxD): 51 x 560-560 x 490-500 mm
Dimensions (HxWxD): ..... 51x592x522 mm
Dimensions of the packed product (HxWxD): ..... 126x753x603 mm
Net weight: ..... 13.0 kg
Gross weight: ..... 14.1 kg

4 242005 320752

# Series 4, Induction Hob, 60 cm, surface mount without frame PID631BB5E

## The induction hob: cook fast, clean and safely

- 60 cm: space for 3 pots or pans.

**Flexibility of cooking zones**

- Ring zone triple: use regular up to extra large cookware (e.g. paella pans) on the expandable cooking zone.
- Cooking zone rear left: 210 mm, 260 mm, 320 mm, 2.2 KW (max. power 3.7 KW)
- Cooking zone rear right: 145 mm , 1.4 KW (max power 2.2 KW)
- Cooking zone front right: 210 mm, 2.2 KW (max. power 3.7 KW)

**Features**

- Easytouch electronic control panel: control the power with imprinted +/- touch buttons.
- 17 power levels: precisely adapt the heat with 17 power levels (9 main levels and 8 intermediate levels).
- on device: switches off the cooking zone at the end of the time set (e.g. for boiled eggs).
- on device: an alarm sounds at the end of the time set (e.g. for pasta).

**Time saving & efficiency**

- Boost function for all zones: boil water more quickly thanks to 50% more energy than at the highest standard level.
- yes: when switching on, the hob automatically selects the cooking zone with cookware (placed in off-mode).
- ReStart Function: in case of unintentional switch-off, restore all previous settings by switching on the hob again within 4 seconds.
- yes: quickly switch off a cooking zone with one longer touch.

**Design**

- Front facette design

**Safety**

- Digital 2 stage residual heat indicator: indicates which cooking zones are still hot or warm.
- Childproof lock: prevent unintended activation of the hob.
- Main switch: switch off all cooking zones at the touch of a button.
- Safety switch-off: for safety reasons, heating stops after a preset time without interaction.

**Installation**

- Dimensions of the product (HxWxD mm): 51 x 592 x 522
- Required niche size for installation (HxWxD mm) : 51 x 560 x (490 - 500)
- Min. worktop thickness: 16 mm
- Connected load: 7.4 KW
- PowerManagement Function: limit the maximum power if needed (depends on fuse protection of electric installation).
- Power cord: 1.1 m, connected to terminal block

## Series 4, Induction Hob, 60 cm, surface mount without frame
## PID631BB5E

measurements in mm

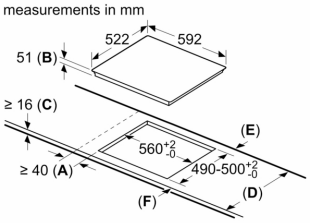


**A**: Minimum distance from the hob cut-out to the wall.
**B**: Recessed depth
**C**: The clearance between the surface of the worktop and the top of the front of the oven must be 30 mm. See space requirements for the oven.

The worktop into which the hob is installed must withstand loads of approx. 60 kg; suitable substructures must be used if required.

| D | E | F |
|---|---|---|
| 585-600 | 50 | ≥ 35 |
| > 600 | ≥ 50 | ≥ 50 |

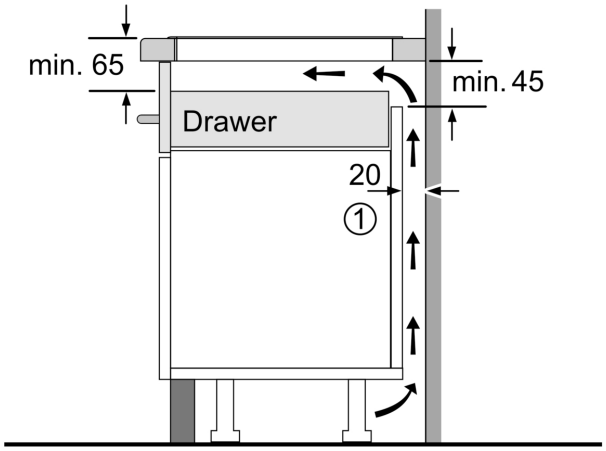


① Ventilation gap must be present.

Measurements in mm

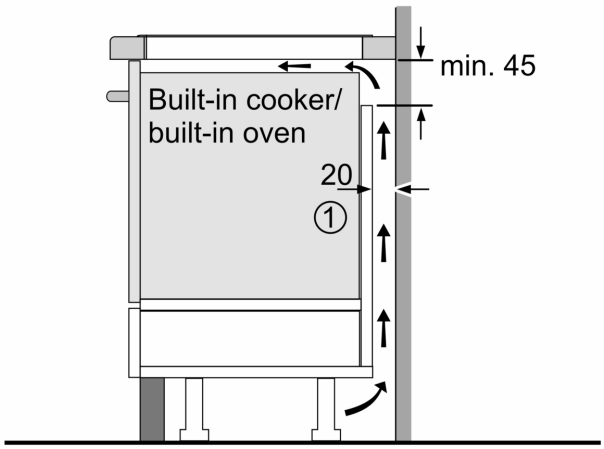


① Ventilation gap must be present

All measurements in mm

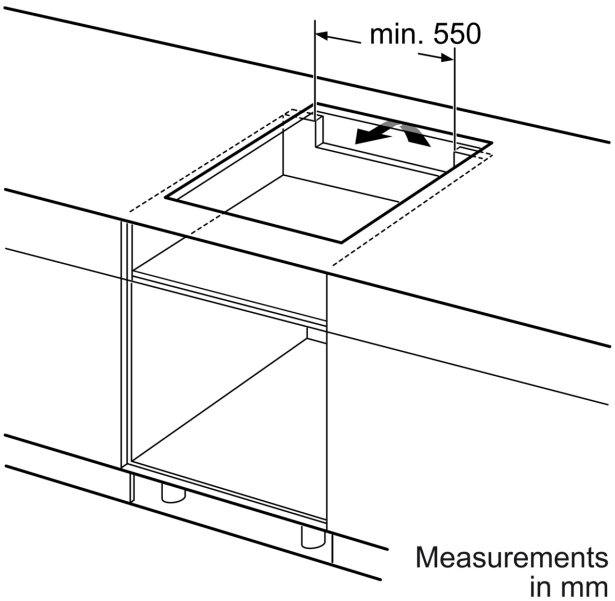


Measurements in mm