Series 8, Built-in oven, 60 x 60 cm, Black
HBG633NB1

A+

- **4D hotair**: even heat distribution for perfect results – on any level.
- **TFT Touch Display**: easy-to-use thanks to the Control Ring with clear text and symbols.
- **EcoClean Direct**: less cleaning effort thanks to a special coating of the rear wall that automatically absorbs grime.
- **Flap door with SoftOpen and SoftClose**: the oven door opens and closes especially gently and quietly.
- **1-stage telescoping rails, fully extendable**: for safe, easy insertion and removal of baking trays.

1 x combination grid, 1 x universal pan

HEZ327000 Pizza stone, HEZ530000 Half tray, HEZ531010 Baking tray, non-stick ceramic coated, HEZ532010 Universal pan, non-stick ceramic coated, HEZ617000 Pizza pan, enamelled, HEZ625071 Grill tray, anthracite, HEZ631070 Baking tray, enamelled, HEZ632070 Multipurpose pan, enamelled, HEZ633001 Lid for professional pan, enamelled, HEZ633070 Professional pan, enamelled, HEZ634000 Baking and roasting grid (standard), HEZ635000 Barbecue-Set, HEZ636000 Glass pan, HEZ638200 2 level telescopic shelf rails, full ext, HEZ638300 3 level telescopic rails, full ext, HEZ660050 Cover Strip, HEZ664000 Baking and roasting grid (steam), HEZ915003 Glass roasting dish, 5,4 L, HEZG0AS00 Connecting cable 3m

Gross weight: ..... 37.2 kg
Built-in / Free-standing: ..... Built-in
Integrated Cleaning system: ..... EcoClean program, Hydrolytic
Min. required niche size for installation (HxWxD): 585-595 x 560-568 x 550 mm
Dimensions: ..... 595 x 594 x 548 mm
Dimensions of the packed product (HxWxD): ..... 670 x 670 x 680 mm
Control Panel Material: ..... Glass
Door Material: ..... Glass
Net weight: ..... 34.8 kg
Usable volume of cavity: ..... 71 l
Heating modes:: 4D hotair, Defrost, Full width grill, Hot Air-Eco, Half width grill, Conventional heat, Conventional heat ECO, Pizza setting, Bottom heat, Hot air grilling
Number of interior lights: 1
Length electrical supply cord: ..... 120.0 cm
Interior Lights - cavity 1: 1
Pull-out system: 1-level
Included accessories: ..... 1 x combination grid, 1 x universal pan
Broil Element Wattages cavity 1: ..... 2800 W
Convection Element Wattages cavity 1: ..... 2200 W
Energy efficiency rating: ..... A+
Energy consumption per cycle conventional (2010/30/EC): ..... 0.87 kWh/cycle
Energy consumption per cycle forced air convection (2010/30/EC): 0.69 kWh/cycle
Energy efficiency index (2010/30/EC): ..... 81.2 %
Connection rating: ..... 3600 W
Fuse protection: ..... 16 A
Voltage: ..... 220-240 V
Frequency: ..... 60; 50 Hz
Plug type: ..... Gardy plug w/ earthing
Alternative colors available: HBG633NS1, HBG633NW1
Energy input: ..... Electric
Required cutout/niche size for installation (in): x
Dimensions of the packed product: ..... 26.37 x 26.37 x 26.77
Net weight: ..... 77.000 lbs
Gross weight: ..... 82.000 lbs
Length electrical supply cord: ..... 120.0 cm
Net weight: ..... 34.8 kg

4 242002 807614

Series 8, Built-in oven, 60 x 60 cm, Black
HBG633NB1

Type of oven / heating system:

- Oven with 10 heating methods: 4D hotair, Hotair Eco,, Conventional heat, Conventional heat ECO, Hot air grilling, Full width grill, Half width grill, Pizza setting, Bottom heat, Defrost
- Temperature range 30 °C - 300 °C
- Cavity volume: 71 l

Hook-in racks / rails

- Number of shelf levels: 5 PC
- 1 level telescopic shelf, full extension, with Stop function

Design:

- Rotary swivel

Cleaning:

- EcoClean Direct: coating of back panel

Comfort:

- 2,5“-TFT-color and text display with touch-control buttons
- Electronic clock
- Temperature proposal
- Actual temperature display Heating-up control Sabbath setting
- Oven door with SoftOpen and SoftClose, Drop down door
- Bar handle
- Rapid heating-up
- Halogen interior lighting, Switch for oven illumination
- Integral cooling fan

Accessory:

- universal pan, combination grid

Environment and Safety:

- low door temperature
- Child lock
- Automatic switch off Residual heat indicator Start-/Stop button Door contact switch

Technical Information

- Length of mains cable: 120 cm
- Nominal voltage: 220 - 240 V
- Total connected load electric: 3.6 KW
- Energy efficiency rating (acc. EU Nr. 65/2014): A+(at a range of energy efficiency classes from A+++ to D)
- Energy consumption per cycle in conventional mode:0.87 kWh
- Energy consumption per cycle in fan-forced convection mode:0.69 kWh
- Number of cavities: 1 Heat source: electrical Cavity volume:71 l

Dimensions:

- Appliance dimension (hxwxd): 595 mm x 594 mm x 548 mm
- Niche dimension (hxwxd): 585 mm - 595 mm x 560 mm - 568 mm x 550 mm
- “Please reference the built-in dimensions provided in the installation drawing”
- We recommend you to choose complementary products within Series 8, in order to assure an optimal design combination of your Built-In appliances.

Series 8, Built-in oven, 60 x 60 cm, Black
HBG633NB1

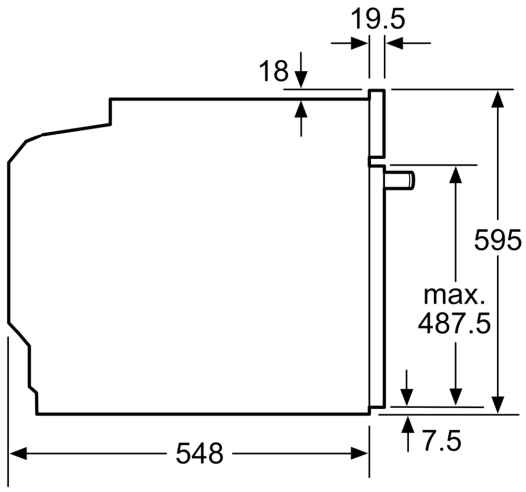

measurements in mm

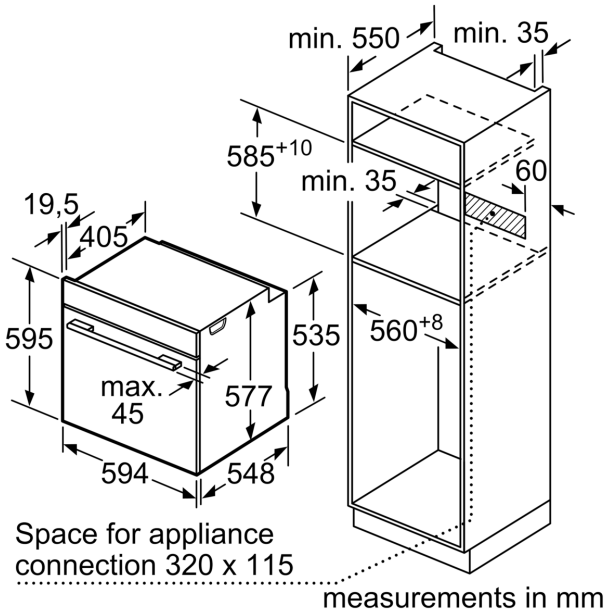

measurements in mm

If the appliance will be installed underneath a hob, the following worktop thicknesses (including substructure if necessary) must be taken into account.

Hob type	min. worktop thickness	
	fitted	flush
Induction hob	37 mm	38 mm
Full surface Induction hob	47 mm	48 mm
Gas hob	30 mm	38 mm
Electric hob	27 mm	30 mm

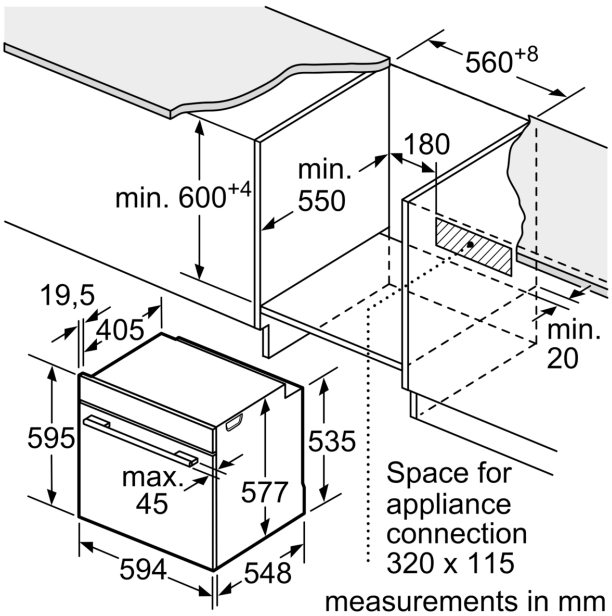

measurements in mm