## Series 4, Induction hob with integrated ventilation system, 60 cm, surface mount without frame PIE611B15E

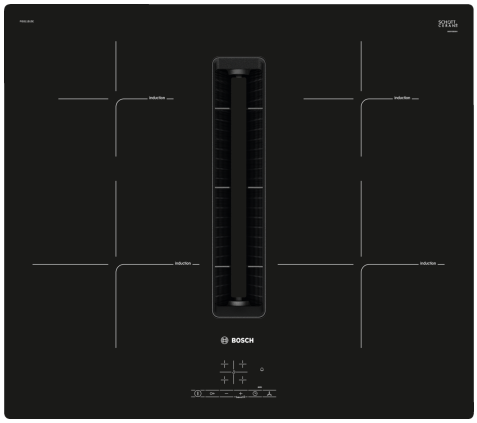

B

TouchSelect ReStart

1 x Slider for unducted recirculation, 1 x Clean Air Plus odor filter

HEZ9ES100 Espresso maker 4 cups, HEZ9FE280 Iron pan Ø 18 / 28 cm, HEZ9SE040 4 pieces Set, HEZ9SE060 6 pieces Set, HEZ9VDKE1 Exhaust kit, HEZ9VDKR0 Recirculation kit 2 L-bow (70cm), HEZ9VDKR1 Recirculation kit S and L-bow (60cm), HEZ9VDKR2 Recirculation kit 1x L-bow, HEZ9VDSB1 90° flat duct bend horizontal, HEZ9VDSB2 90° flat duct L vertical, HEZ9VDSB3 90° flat duct M vertical, HEZ9VDSB4 90° flat duct S vertical, HEZ9VDSI0 Adapter round-flat, HEZ9VDSI1 90° Adapter round-flat, HEZ9VDSM1 Straight tube 500mm, HEZ9VDSM2 Straight tube 1000mm, HEZ9VDSS1 Connector sleeve (female), HEZ9VDSS2 Flex sleeve (female), HEZ9VEDU0 Acoustics Filter, HEZ9VRCR0 cleanAir recirculation replenishment fil, HEZ9VRCR1 Clean Air Plus odor filter (replacement), HEZ9VRPD1 Plinth Diffusor

## The induction hob with integrated ventilation module: combines induction with ventilation technology for perfect results.

- **TouchSelect**: Selection of the desired cooking zone and easy setting of the desired power level.
- **PowerBoost**: up to 50% more power for faster heating on your induction hob.
- **If you turn off the cooktop it saves the last selected setting for a short time. If the cooktop is switched off within a short time again the former settings are still available.**
- **Timer with switch-off function: Turns off the assigned cooking zone after the set time.**
- **The handy ChildLock locks the control panel to prevent accidental changes in settings.**

Appliance type: ....Cooking zone ceramic
Built-in / Free-standing: ....Built-in
Heating type: ....Electric hob
Min. required niche size for installation (HxWxD): ....223 x 560-560 x 490-490 mm
Width of the appliance: ....592 mm
Dimensions: ....223x592x522 mm
Dimensions of the packed product (HxWxD): ....430 x 690 x 670 mm
Net weight: ....23.1 kg
Gross weight: ....27.9 kg
Residual heat indicator: ....Separate
Location of control panel: ....Front
Basic surface material: ....Ceramic glass
Color of surface: ....Black
Length electrical supply cord: ....110.0 cm
Sealed Burners: ....No
heating with booster: ....All
Power of heating element (kW): ....2.2 kW
Power of 3rd heating element (kW): ....1.4 kW
Power of 5th heating element (kW): ....1.4 kW
Power of 3rd heating element (kW in boost): ....[2.2] kW
Number of speed settings: ....3-stages + intensive setting
Max. air extraction: ....500 $m^3/h$
Boost position output recirculating: ....595.0 $m^3/h$
Max. air recirculation: ....441 $m^3/h$
Boost position air extraction: ....622 $m^3/h$
Noise level: ....69 dB(A) re 1pW
Odour filter: ....No
Air circulation: ....Convertible
Voltage: ....220-240/380-415 V
Frequency: ....50; 60 Hz
Included accessories: 1 x Slider for unducted recirculation, 1 x Clean Air Plus odor filter

4 242005 250288

# Series 4, Induction hob with integrated ventilation system, 60 cm, surface mount without frame PIE611B15E

## The induction hob with integrated ventilation module: combines induction with ventilation technology for perfect results.

---

**Design**

- Frameless design
- 60 cm: space for 4 pots or pans.

**Flexibility of cooking zones**

- Cooking zone front left: 210 mm, 2.2 KW (max. power 3.7 KW)
- Cooking zone rear left: 150 mm, 1.4 KW (max. power 2.2 KW)
- Cooking zone rear right: 150 mm , 1.4 KW (max power 2.2 KW)
- Cooking zone front right: 210 mm, 2.2 KW (max. power 3.7 KW)

**Usage convenience**

- TouchSelect: control the power with imprinted +/- touch buttons.
- Variable 17-stage power settings for each zone: precisely adapt the heat with 17 power levels (9 main levels and 8 intermediate levels).
- Timer for all zones
- : switches off the cooking zone at the end of the time set (e.g. for boiled eggs).
- Timer - shows how long the cooktop is in use
- : an alarm sounds at the end of the time set (e.g. for pasta).

**Time saving & efficiency**

- PowerBoost function for all zones
- : boil water faster thanks to 50% more energy than at the highest standard level.
- QuickStart function: when switching on, the hob automatically selects the cooking zone with cookware (when placed on a zone whilst the hob is off).
- ReStart function: in case of unintentional switch-off, this feature restores all previous settings by switching on the hob again within 4 seconds.
- Quick Stop: quickly switch off a cooking zone with one longer touch.

**Safety**

- 2 stage residual heat indicator for each zone: indicates which cooking zones are still hot or warm.
- Control panel lock: prevent unintended activation of the hob.
- Freeze function: wipe overboiled liquids without unintentionally changing settings (blocking all touch buttons for 30 seconds).
- Main on/off switch: switch off all cooking zones at the touch of a button.
- Automatic safety shut off: for safety reasons, heating stops after a preset time if not used (possible to customise).

**Installation**

- Dimensions of the product (HxWxD mm): 223 x 592 x 522
- Required niche size for installation (HxWxD mm) : 223 x 560 x (490 - 490)
- Min. worktop thickness: 16 mm
- Connected load: 7.4 KW
- Power management options for 16A, 13A or 10A connection: limit the maximum power if needed (depends on fuse protection of electric installation).
- Power cord: 1.1 m, Cable included
- Suitable for installation into a 60 cm base cabinet
- Suitable for ducted or recirculated extraction installations in 4 different options (unducted, partly and fully ducted recirculation or ducted extraction). Installation accessories for unducted recirculation, among these four cleanAir odor filters and a telescopic slider element, are included in the cooktop. The included accessories allow easy and quick installations and can be planned in all worktop depths ≥60cm. For other types of installation, one of the following accessory kits is recommended:
- HEZ9VDKR1 for partly-ducted recirculation in worktops of ≥60cm depth with max. worktop height of 960 mm. HEZ9VDKR0 for partly-ducted recirculation in worktops of ≥70cm depth with max. worktop height of 960 mm.
- HEZ9VDKE1 as starter kit for ducted extraction in worktops of ≥60cm depth.
- To complete the fully ducted extraction or to do any other individual recirculation planning different ducting accessories are available.

**Integrated ventilation downdraft system**

- Induction cooktop with fully integrated high-performance downdraft extractor.
- Suitable for ducted or recirculated extraction configuration (incl. differentiated software modes). Installation accessories for unducted recirculation, among these four cleanAir odor filters and a telescopic slider element, are included in the cooktop. Accessories for other installation options are available, details in the planning notes.
-
- Aesthetically integrated fully flush air intake design with floating, heat resistant glass ceramics element for free movement and placement of cookware.
- Ventilation system with 3 electronically controlled fan power levels and 1 Boost-/Intensive fan power levels (with automatic revert) via TouchSelect user interface
- - Automatic switch-on of ventilation system when a cooking zone is used.
- - Automatic delayed shut-off after cooking to erase residual odors after cooking (in specific ultra low-noise fan level, 12min in ducted extraction, 30min in recirculated extraction, can be shut-off manually).
- - Fully manual control possible via TouchSelect.
- High-performance, low-noise blower with energy-effcienct BLDC-technology. High extraction rates at very low noises with pleasant noise frequencies through psycho-acoustically and aerodynamically optimized interieur with enclosed, non-visible blower. Highly pressuredrop resistant even with longer and more complex ductings.
- Easy-to-detach and easy-to-clean grease filter and liquid collector unit:
- - Convenient one-hand removal of unit via floating glass ceramics handle.
- - Integrated, large-scale, high performance stainless-steel grease filters with 12 filtration layers and one black top layer for enhanced aesthetical integration. Grease filtration efficiency of 94 %.
- - All parts of the unit are easy-to-clean, fully dishwasher safe and heat resistant.
- - (Upper) Liquid collector unit with 200ml of capacity for standard

accidental spillages or cooking condensate.

- - Powerful drainage system for spillages that exceed 200ml of liquids.
- - Liquid safety collector with additional capacity of 700ml for more severe accidental situations. Dishwasher safe. Easily accessible and detachable from below.
- - Overall capturing capacity of 900ml (200ml + 700ml).
- - Watertight blower system.
- Ventilation system performance:
- - Extraction performance in ducted extraction (according to EN 61591): min. normal setting 330 m3/h , max. normal setting 500 m3/h , max. Boost-/Intensive setting 622 m3/h .
- - Extraction performance in recirculated extraction (according to EN 61591): min. normal setting 252 m3/h , max. normal setting 441 m3/h , max. Boost-/Intensive setting 595 m3/h.
- - Noise level in ducted extraction (Sound power level according to EN 60704-3): min. normal setting 61 dB re 1 pW, max. normal setting 69 dB re 1 pW, max. Boost-/Intensive setting 74 dB re 1 pW.
- - Noise level in recirculated extraction (Sound power level according to EN 60704-3. ): min. normal setting 55 dB re 1 pW, max. normal setting 66 dB re 1 pW, max. Boost-/Intensive setting 72 dB re 1 pW.
- - Grease filter efficiency (according to EN 61591) 94 %.
- Consumption data and energy efficiency (according to Regulation (EU) No 65/2014):
- - Energy Efficiency Class: B (at a range of energy efficiency classes from A+++ to D).
- - Fluid Dynamic Efficiency: A .
- - Average energy consumption: 57 .
- - Grease filtration effciency class: B .
- - Noise min. normal setting & max. normal setting: 61 dB & 69 dB .
- For recirculation configuration: 2 x 2 battery of directly integrated, high-performance cleanAir odor filters.
- - Optimised odour reduction performance for cooking applications with complex odour molecules (e.g. fish).
- - Large scale filter surface with high odour reduction capabilities.
- - Lifetime of 360 hours of cooking (non-regenerative).
- - Low-noise filters with optimised psycho-acoustics.
- - Easy-to-access and easy-to-remove from above.
- - Replenishment cleanAir filter set HEZ9VRCR0.
- For ducted extraction configuration: 2 x 2 sets of directly integrated, high-performance low-noise acoustic filters for significantly lower noise and improved psycho-acoustics.

**Planning & installation notes**

- Planning suggestions:
- - Installation is possible in island as well as wall oriented configurations.
- The product and its accessories comply with the Needle Flame Test (according to IEC 60695-11-5) and the V2 flammability class (according to UL94).
- - The max. immersion depth is 223 mm below worktop surface.
- - The appliance must be freely accessible from below (i.e. for accessing the lower liquid safety collector).
- - No false floor is necessary below the cooktop with integrated downdraft ventilation system. The drawers and/or shelves in the floor unit must be removable. The backpanel of the floor unit can be kept - only a cut-out for the air outlet is needed (position and size can be taken from the installation instructions).
- An installation with unducted recirculation requires a vertical aperture of min. 25mm behind the backpanel of the furniture. Suggested for ideal performance are 50mm.
- The minimum worktop thickness is 16 mm for top mounted and flush installed appliances with the standard installation system. Installation in even thinner worktops is also possible with the spare part: content 626792.
- - The overall appliance weight is 26kg - the bearing capacity and stability, in the case of very thin worktops in particular, must be supported using suitable substructures. The overall appliance weight and the worktop manufacturer's structural integrity specifications are to be taken into account.
- - For partly ducted and unducted recirculation extraction installations, a return-flow aperture of ≥400cm² is to be respected in the plinth area. The aperture can be realized via outlet grids, lamella grids or subtly shortened plinths depending on the assortment of the kitchen furniture manufacturer.
- - The air outlet on the backside of the appliance can directly be accessed with a male flat duct element (DN 150).
- - The pressuredrop resistant blower allows longer and more complex ductings up to 8m with three 90° bows while keeping sufficient performance.
- - When installing a ventilation hood with ducted extraction and a chimney-vented fireplace, the power supply line of the appliance needs a suitable safety switch. This is not required for configurations in recirculated extraction.
- - In ducted extraction configuration a one-way flap (or backflow trap) with a maximum opening pressure of 65Pa should be installed.

# Series 4, Induction hob with integrated ventilation system, 60 cm, surface mount without frame
# PIE611B15E

measurements in mm

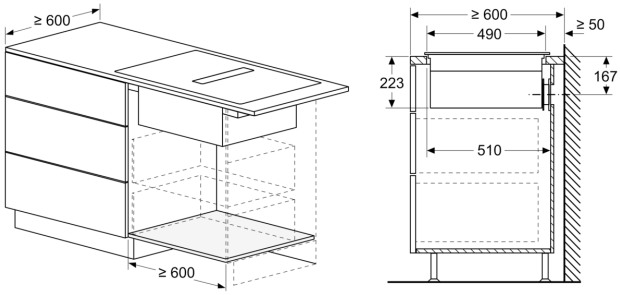


measurements in mm

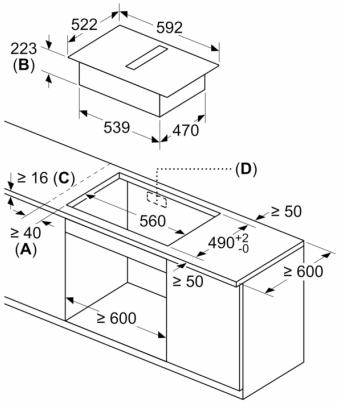


**A**: Minimum distance from the hob cut-out to the wall
**B**: Recessing depth
**C**: The worktop into which the hob is installed must withstand loads of approx. 60kg; suitable substructures must be used if required.
**D**: Cut-out in back panel required for pipework. Exact size and position can be taken from specific drawing.

Measurements in mm

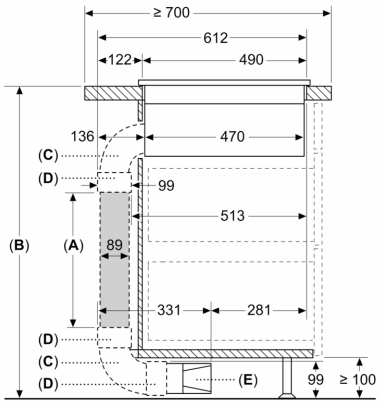


**A:** Tube length
**B:** Kitchen height
**C:** 90° L-size bow
**D:** Connector sleeve
**E:** Diffusor

Ducting kit available for ≥ 700 mm depth worktops and up to 960 mm height

The installer has to select the tube length and if necessary cut it according to the kitchen height

| A | B |
|---|---|
| 500 | ≤ 960 |
| 1000 | > 960 |

Measurements in mm

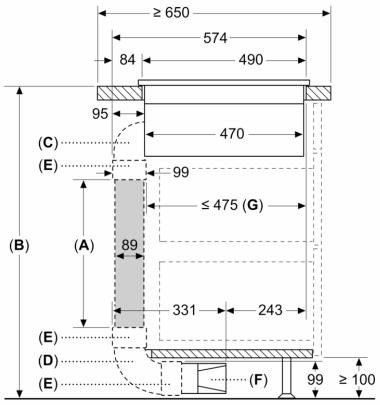


**A:** Tube length
**B:** Kitchen height
**C:** 90° M-size bow
**D:** 90° L-size bow
**E:** Connector sleeve
**F:** Diffusor
**G:** Shortened Drawer

The installer has to select the tube length and if necessary cut it according to the kitchen height

| A | B |
|---|---|
| 500 | ≤ 940 |
| 1000 | > 940 |

Measurements in mm

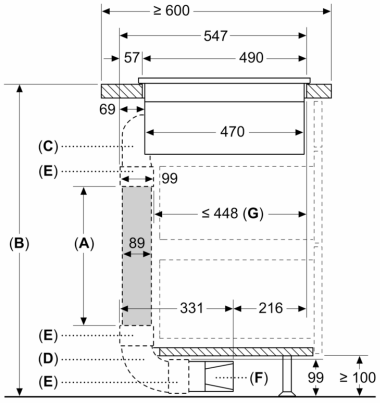


**A:** Tube length
**B:** Kitchen height
**C:** 90° S-size bow
**D:** 90° L-size bow
**E:** Connector sleeve
**F:** Diffusor
**G:** Shortened Drawer

Ducting kit available for ≥ 600 mm depth worktops and up to 960 mm height

The installer has to select the tube length and if necessary cut it according to the kitchen height

| A | B |
|---|---|
| 500 | ≤ 990 |
| 1000 | > 990 |

measurements in mm

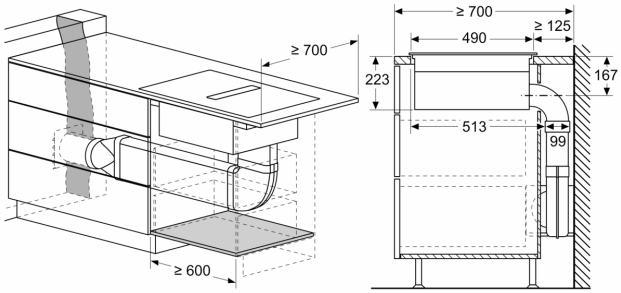


measurements in mm

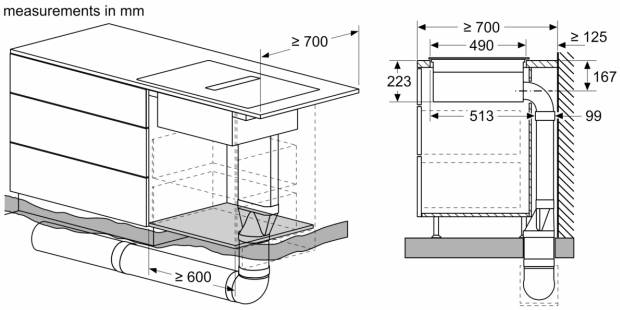


measurements in mm

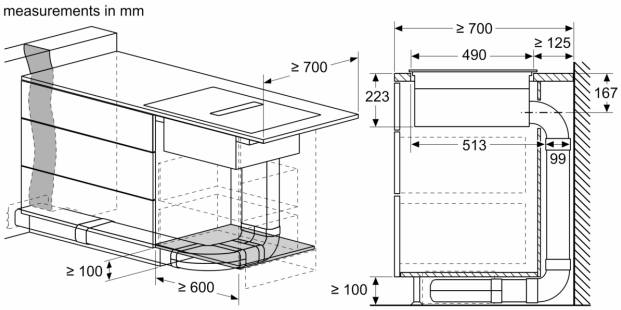


measurements in mm

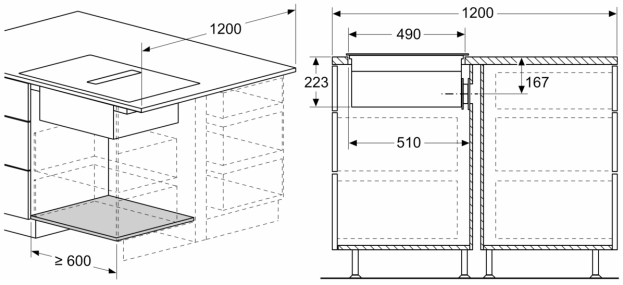


measurements in mm

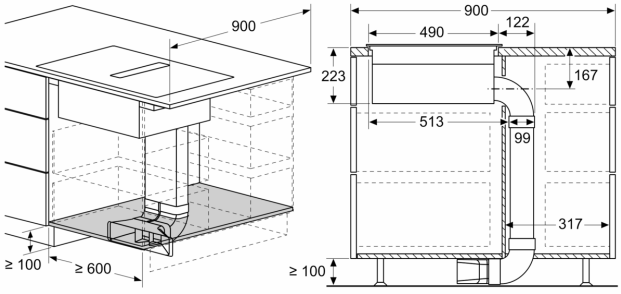

Measurements in mm

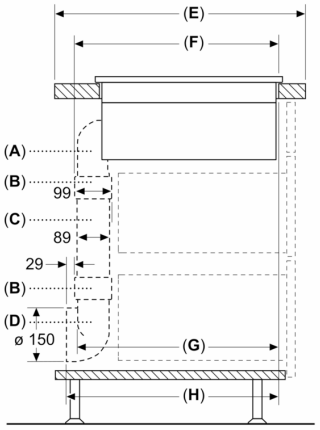


| A | E | F | G | H |
|---|---|---|---|---|
| S-size | ≥ 600 | 547 | 545 | 579 |
| M-size | ≥ 650 | 574 | 569 | 603 |
| L-size | ≥ 700 | 612 | 609 | 643 |

**A:** 90° Bow
**B:** Connector sleeve
**C:** Straight tube
**D:** 90° Adapter round–flat

Measurements in mm

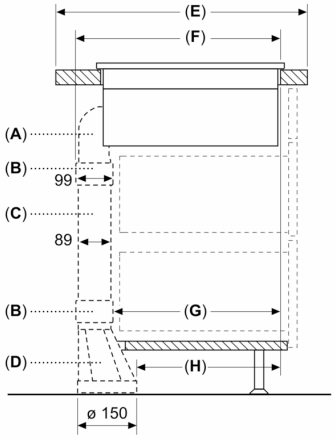


| A | E | F | G | H |
|---|---|---|---|---|
| S-size | ≥ 600 | 547 | 451 | 389 |
| M-size | ≥ 650 | 574 | 475 | 413 |
| L-size | ≥ 700 | 612 | 515 | 453 |

**A:** 90° Bow
**B:** Connector sleeve
**C:** Straight tube
**D:** Straight adapter round-flat

measurements in mm
Front view

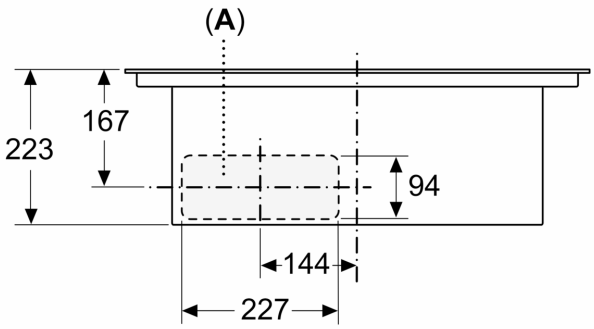


measurements in mm
Front view – unit cut-out
for unducted recirculation

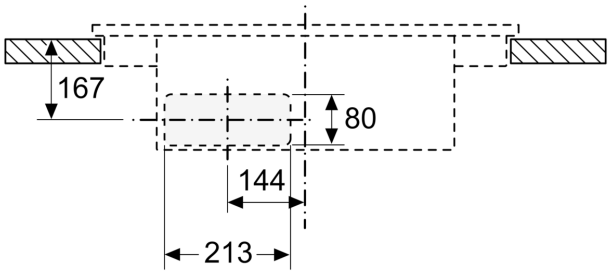


**A**: Connected directly at the rear

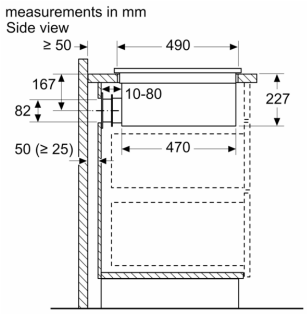

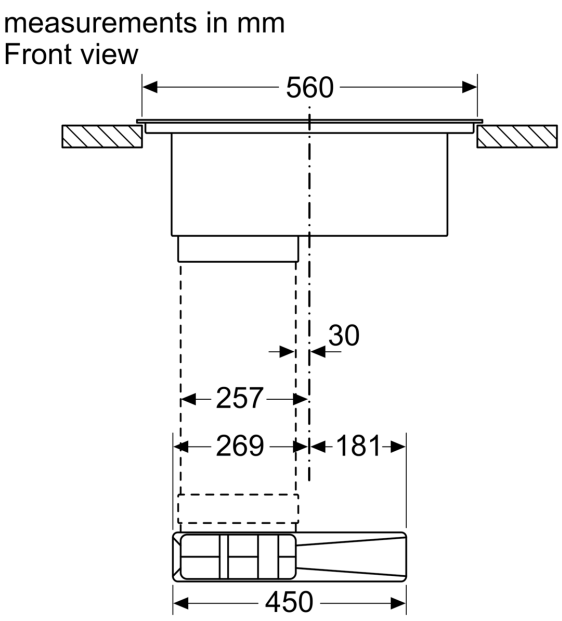
When installing directly against outer walls that are not insulated (μ ≥ 0.5 W/m² °C), we recommend using partially or fully ducted recirculation configurations.