Series 2, Built-in fridge-freezer with freezer at bottom, 177.2 x 54.1 cm, sliding hinge
KIN85NSF0G

KSZB6R00	Bottle Rack
KSZGGM00	Butter box

The spacious built-in fridge-freezer combination with NoFrost provides optimal food storage and ice formation is no longer an issue.

- **Eco Airflow**: maintains optimal air circulation and a constant temperature level throughout the cooling area.
- **LED lighting**: all your items in perfect view.
- **Super Freezing function**: prevents the food in your freezer from defrosting.
- **No Frost**: never defrost again, thanks to perfect protection from ice formation - that saves time and effort.

Energy Efficiency Class: ..... F
Average annual energy consumption in kilowatt hour per year (kWh/a): ..... 298 kWh/annum
Sum of volume of frozen compartments: ..... 99 l
Sum of volume of chill compartments: ..... 150 l
Airborne acoustical noise emissions : ..... 39 dB(A) re 1pW
Airborne acoustical noise emission class: C
Built-in / Free-standing: ..... Built-in
Door panel options: ..... Not possible
Height: ..... 1772 mm
Width of the appliance: ..... 541 mm
Depth: ..... 548 mm
Min. required niche size for installation (HxWxD): 1775.0 x 560 x 550 mm
Net weight: ..... 50.9 kg
Fuse protection: ..... 10 A
Door hinge: ..... Right reversible
Voltage: ..... 220-240 V
Frequency: ..... 50 Hz
Length electrical supply cord: ..... 230.0 cm
Number of compressors: 1
Number of independent cooling systems: 1
Interior ventilator: ..... No
Reversible Door Hinge: ..... Yes
Number of Adjustable Shelves in fridge compartment: 2
Shelves for Bottles: ..... No
Frost free system: ..... Freezer
Installation typology: ..... Integrated

4 242005 244911

Series 2, Built-in fridge-freezer with freezer at bottom, 177.2 x 54.1 cm, sliding hinge
KIN85NSF0G

The spacious built-in fridge-freezer combination with NoFrost provides optimal food storage and ice formation is no longer an issue.

- EU19_Fast freezer facility_D

Design features
- NoFrost freezer, Built-in fridge-freezer
- Sliding hinge, softClosing door: No
- Easy Installation

Functions
- Bright interior LED fridge light in fridge section

Design features
- LED electronic control
- 1 compressor
- Super Cooling: No
- Optical and accoustical

Design features
- 2 door trays, including 0x dairy compartment

Freshness System
- 1 MultiBox - Transparent drawer with a rippled bottom, ideal for storing fruits and vegetables.

Food freshness system
- NO_FROST_NEU_BL, never have to defrost ever again
- SuperFreezing function with automatic deactivation

Dimension and installation
- Dimensions: 177.2 cm H x 54.1 cm W x 54.8 cm D
- Niche Dimensions: 177.5 cm H x 56 cm W x 55 cm D

Key features - Fridge section
- Right hinged door, door reversible
- 220 - 240 V

Key features - Freezer section
- KIN85NSF0G
- bottle holder in door tray

Country Specific Options
- Based on the results of the standard 24-hour test. Actual consumption depends on usage/position of the appliance.

Additional features
- 3 safety glass shelves in fridge compartment of which 2 are height adjustable
- 4 freezer drawers

Performance and Consumption
- EU19_EEK_D: F
- Total Volume : 249 l
- Net Fridge Volume : 150 l
- Net Freezer Volume : 99 l
- Freezing capacity 24h : 5.5 kg
- Annual Energy Consumption: 298 kWh/a
- Noise Level : 39 dB , EU19_Noise emission class_D: C
- Climate Class: SN-ST
- Temperature rise time : EU19_Temperature rise time_D: 10 H

Series 2, Built-in fridge-freezer with freezer at bottom, 177.2 x 54.1 cm, sliding hinge
KIN85NSF0G

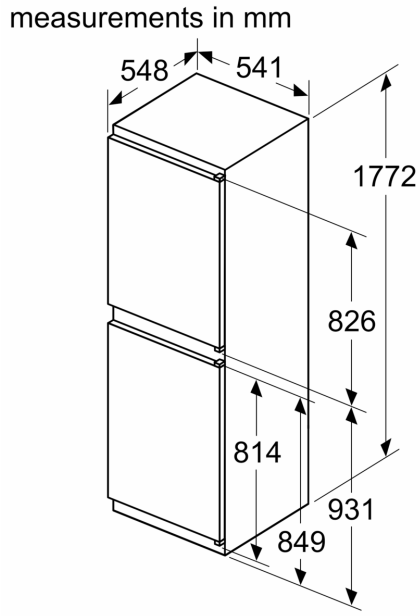

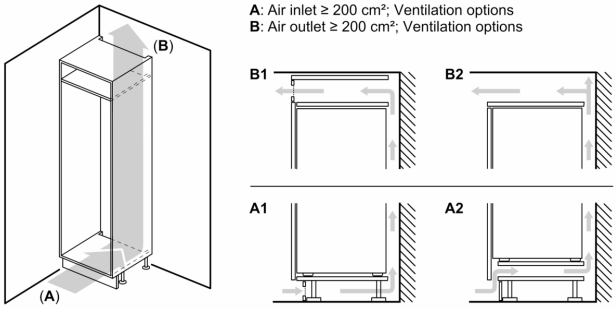

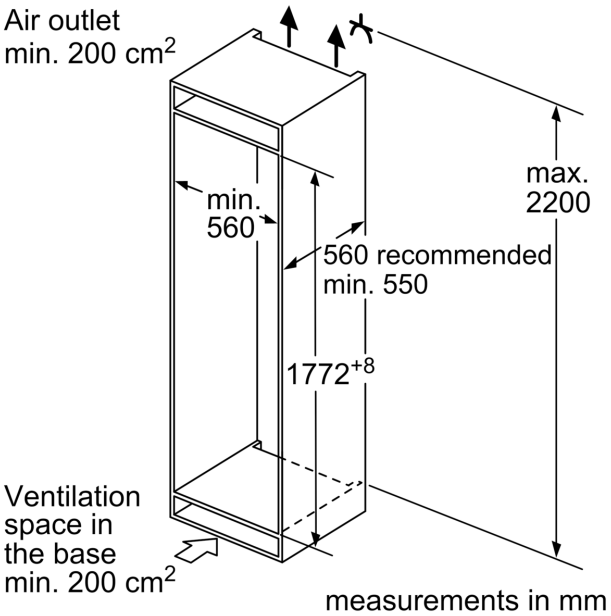

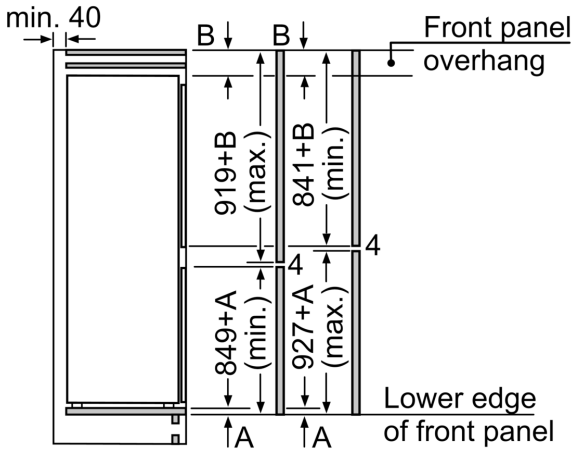

The specified unit door dimensions are valid for a door gap of 4 mm.

measurements in mm