Flat duct, connector sleeve female
HEZ9VDSS2

- **Flexible, female sleeve element to combine male flat duct elements**
- **Directly integrated sealings for full airtightness without necessity for any duct-tapes. Aerodynamically optimised design to minimise pressure loss and maximise air flow rate. Easy-to-connect via time saving click mechanism.**

Technical Data

Dimensions of the packed product (HxWxD): ..... 150x300x210 mm
Pallet dimensions: ..... 100.0 x 80.0 x 120.0
Standard number of units per pallet: 100
Net weight: ..... 0.6 kg
Gross weight: ..... 0.8 kg
EAN code: 4242005286874

4 242005 286874
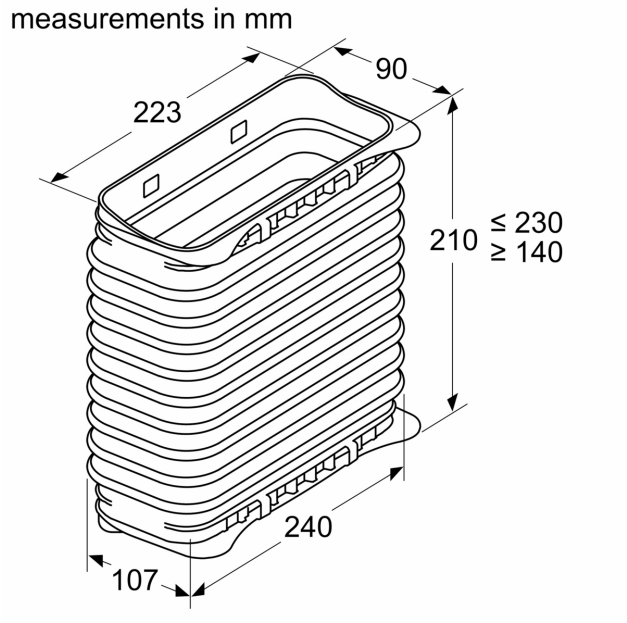
Flat duct, connector sleeve female
HEZ9VDSS2