Series 8, Built-in compact oven with microwave function, 60 x 45 cm, Stainless steel
CMG676BS6B

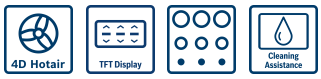

The compact oven with microwave function: enables you to achieve perfect baking and roasting results very quickly.

- **Microwave function**: for quick warming up or for fast cooking in combination with hotair.
- **4D Hotair**: even heat distribution for perfect results.
- **TFT touchdisplay**: clearly shows text and images, for easy and intuitive oven control.
- **Pyrolytic self-cleaning**: Automatically cleans the oven, just wipe out the ash.
- **Cleaning Assistance**: less cleaning effort thanks to the new cleaning option, which can be especially used for cleaning of light soiling.

Technical Data

Type of micro-wave oven:	MW-Combi
Type of control:	Electronic
Dimensions:	455 x 594 x 548 mm
Cavity dimensions:	237.0 x 480 x 392.0 mm
Length electrical supply cord:	150.0 cm
Net weight:	37.0 kg
Gross weight:	40.0 kg
EAN code:	4242002932538
Max. microwave power level:	900 W
Connection rating:	3600 W
Fuse protection:	16 A
Voltage:	220-240 V
Frequency:	60; 50 Hz
Plug type:	no plug (electrical connection by electrician)
Included accessories:	1 x combination grid, 1 x universal pan

Included accessories

1 x combination grid, 1 x universal pan

Optional accessories

HEZ327000 Pizza stone, HEZ530000 Half tray, HEZ531010 Baking tray, non-stick ceramic coated, HEZ532010 Universal pan, non-stick ceramic coated, HEZ617000 Pizza pan, enamelled, HEZ625071 Grill tray, anthracite, HEZ631070 Baking tray, enamelled, HEZ632070 Multipurpose pan, enamelled, HEZ634080 Baking and roasting grid (microwave), HEZ636000 Glass pan, HEZ660050 Cover Strip, HEZ660060 Strip, HEZ664000 Baking and roasting grid (steam), HEZ915003 Glass roasting dish, 5,4 L

4 242002 932538

Series 8, Built-in compact oven with microwave function, 60 x 45 cm, Stainless steel
CMG676BS6B

The compact oven with microwave function: enables you to achieve perfect baking and roasting results very quickly.

Design

- 3x 2,5“-TFT colour and graphics display with direct touch function
- Bosch control wheel
- Drop down door, SoftClose, SoftOpen
- Straight bar handle
- 3 shelf positions

Features

- Home Connect ready
- Digital temperature display with proposal
- Actual temperature display Heating-up indicator
- Electronic door lock
- Control panel lock Automatic safety switch off Residual heat indicator Start button Door contact switch
- Intelligent microwave inverter technology: For optimised results maximum output power will be regulated to 600 W when used in longer operation for gentler cooking.
- BoschAssist
- Electronic clock timer
- LED light, Light on/off when oven door opened/closed
- Integral cooling fan

Cleaning

- Pyrolytic self-cleaning function

Programmes/functions

- Compact oven with microwave with 12 main functions heating methods: 4D Hotair, Hotair Gentle, conventional top and bottom heat, conventional heat Gentle, Hotair grilling, full width variable grill, half width grill, pizza function, bottom heat, low temperature cooking, plate warming, keep warm
- Additional heating methods with microwave: Microwave, Combi microwave variable
- Max. Power: 900 W; 5 Microwave power settings (90 W,180 W,360 W,600 W,900 W)
- Fast pre-heating function

Accessories

- 1 x combination grid, 1 x universal pan

Performance/technical information

- Cavity volume: 45 litre capacity
- Temperature range 30 °C - 275 °C
- Power cord length 150 cm Cable length
- Total connected load electric: 3.6 KW
- Nominal voltage: 220 - 240 V
- Appliance dimension (hxwxd): 455 mm x 594 mm x 548 mm
- Niche dimension (hxwxd): 450 mm - 455 mm x 560 mm - 568 mm x 550 mm
- Please refer to the dimensions provided in the installation manual

Series 8, Built-in compact oven with microwave function, 60 x 45 cm, Stainless steel
CMG676BS6B

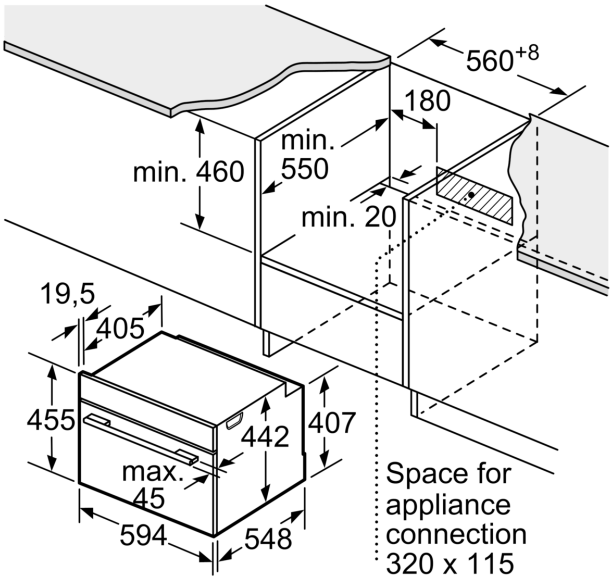

measurements in mm

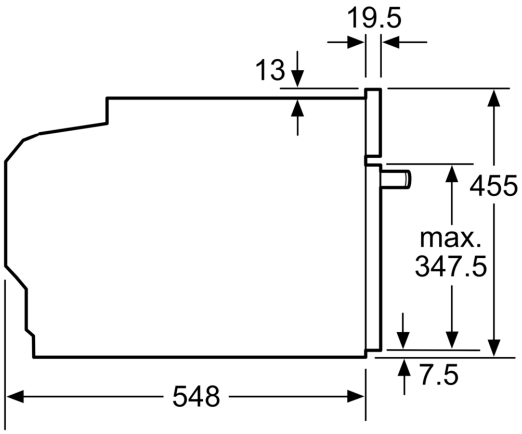

measurements in mm

Installation with a hob.

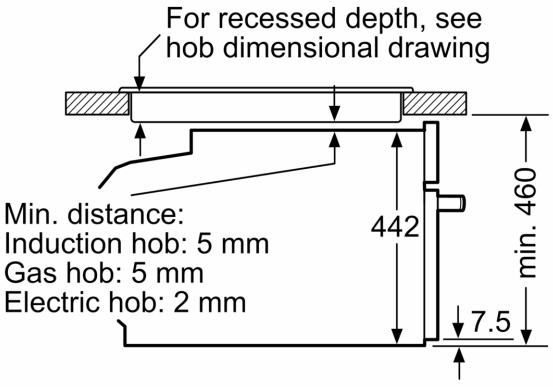

measurements in mm

If the compact appliance will be installed underneath a hob, the following worktop thicknesses (including substructure if necessary) must be taken into acccount.

Hob type	**min. worktop thickness**	
	fitted	flush
Induction hob	42 mm	43 mm
Full surface Induction hob	52 mm	53 mm
Gas hob	32 mm	43 mm
Electric hob	32 mm	35 mm

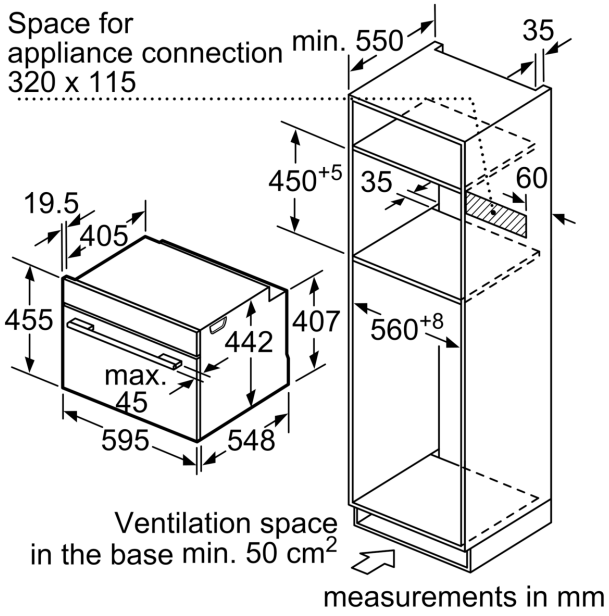
Space for
appliance connection
320 x 115
min. 550
35
450+5
35
60
19.5
405
455
442
407
560+8
max.
45
595
548
Ventilation space
in the base min. 50 cm2
measurements in mm