Series 8, Built-in microwave oven, Stainless steel
BEL634GS1B

- **AutoPilot 10**: every dish is a perfect success thanks to 10 pre-set automatic programmes.
- **TFT display control**: easy-to-use thanks to the control ring with full text and symbols.
- **White LCD display control**: easy-to-use thanks to direct access to additional functions, temperature recommendation and temperature indication.
- **Cleaning Assistance**: less cleaning effort thanks to the new cleaning option, which can be especially used for cleaning of light soiling.
- **LED lighting**: perfect illumination of foods with minimum energy consumption.

Included accessories

1 x grid, 1 x Glass tray

Optional accessories

HEZ6TCC0 Cookbook

Technical Data

Type of micro-wave oven:	MW+Grill function
Type of control:	Electronic
Dimensions:	382 x 594 x 318 mm
Cavity dimensions:	220 x 350 x 270 mm
Length electrical supply cord:	150.0 cm
Net weight:	18.7 kg
Gross weight:	20.9 kg
EAN code:	4242002813721
Max. microwave power level:	900 W
Connection rating:	1990 W
Fuse protection:	10 A
Voltage:	220-240 V
Frequency:	50; 60 Hz
Plug type:	GB plug
Included accessories:	1 x grid, 1 x Glass tray

4 242002 813721

Series 8, Built-in microwave oven, Stainless steel
BEL634GS1B

Design

- stainless steel, Glass base cavity with Glass base, stainless steel
- Electronic clock timer
- Bosch control wheel, Touch controls
- Touch key operation
- Side opening door, left hinged

Features

- Start button
- Intelligent microwave inverter technology: For optimised results maximum output power will be regulated to 600 W when used in longer operation for gentler cooking.
- Microwave and grill for separate use
- Electronic open button
- AutoPilot, 10
- LED light
- Integral cooling fan

Programmes/functions

- 900 W maximum microwave power and the following options 180 W, 360 W, 600 W, 90 W, 900 W
- 1.3 KW grill function
- Grill and microwave power levels 90 W, 180 W, 360 W combinable

Accessories

- 1 x Glass tray, 1 x grid

Performance/technical information

- Cavity volume: 21 l
- Power cord length 150 cm Cable length
- Total connected load electric: 1.99 KW
- Nominal voltage: 220 - 240 V
- Appliance dimension (hxwxd): 382 mm x 594 mm x 318 mm
- Niche dimension (hxwxd): 362 mm - 382 mm x 560 mm - 568 mm x 300 mm
- For installation into a 60 cm wide wall unit, installation in tall housing
- Please refer to the dimensions provided in the installation manual

Series 8, Built-in microwave oven, Stainless steel
BEL634GS1B

measurements in mm

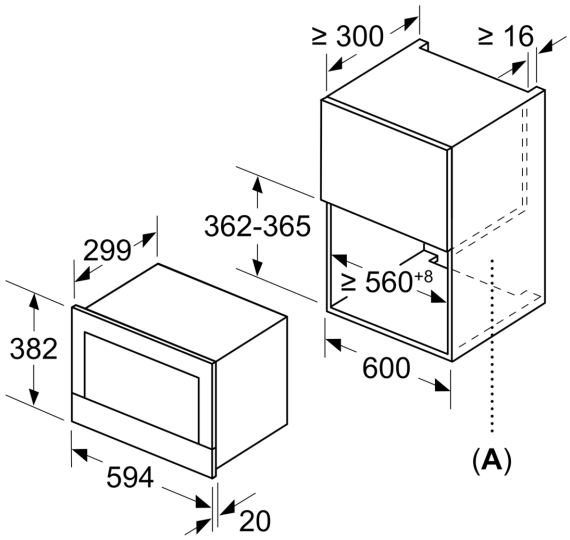

A: Back panel open

measurements in mm

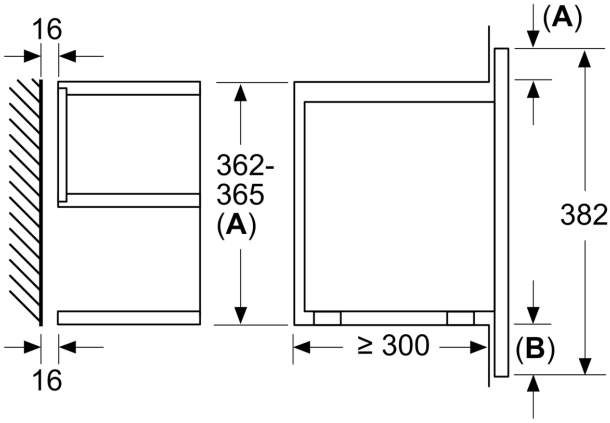

A: Overhang at top:
Recess 362: 6 mm
Recess 365: 3 mm
B: Overhang at bottom: 14 mm

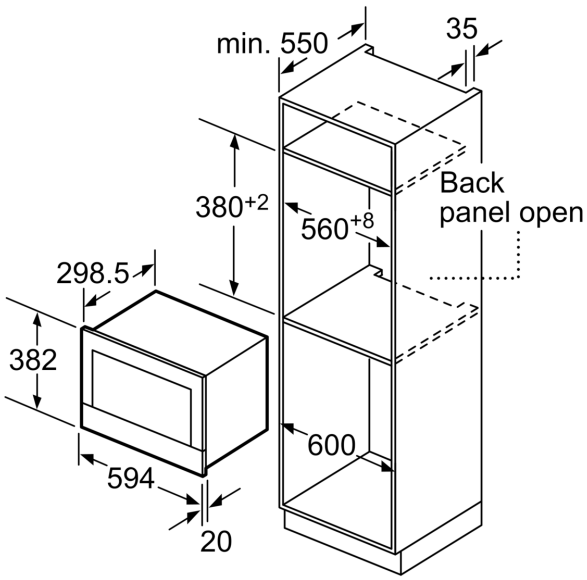

measurements in mm