# Series 6, built-in fridge-freezer with freezer at bottom, 177.2 x 55.8 cm, flat hinge
# KIS87AF3E8

## The bottom freezer with VitaFresh plus Box: keeps your fruits and vegetables fresh for up to twice as long.

- **LED lighting**: keep your groceries in perfect view.
- **A++ energy class refrigerator consumes %40 less energy than A energy class.**
- **Low Frost: defrost less often thanks to lower ice formation - saves work and is energy-efficient.**
- **BigBox frozen food drawer: for stacking storage containers or for large frozen food items.**
- **VarioZone: more flexibility due to variable-use glass shelves and drawers in the freezer compartment.**

---

Built-in / Free-standing: ..... Built-in
Number of compressors: ..... 1
Number of independent cooling systems: ..... 2
Width of the appliance: ..... 558 mm
Height: ..... 1772 mm
Depth of the product: ..... 545 mm
Net weight: ..... 62.3 kg
Min. required niche size for installation (HxWxD): 1775.0 x 560 x 550 mm
Door panel options: ..... Not possible
Door hinge: ..... Right reversible
Number of Adjustable Shelves in fridge compartment: ..... 4
Shelves for Bottles: ..... No
Frost free system: ..... No
Interior ventilator: ..... No
Reversible Door Hinge: ..... Yes
Length electrical supply cord: ..... 230.0 cm
Noise level: ..... 36 dB(A) re 1 pW
Multi-Flow Air Tower: ..... No
Fast cooling switch: ..... Yes
Fast freezing switch: ..... No
Temperature Controlled Drawer: ..... No
Humidity Control Drawer: ..... Yes
Number of Door Bins - Refrigerator: ..... 4
Door bin adjustability - Refrigerator: ..... Yes
Tilt-out door bins in fridge: ..... Yes
Gallon wide door bins: ..... Yes
Number of Gallon storage: ..... 1
Motorized Shelf: ..... No
Material ofthe shelves: ..... Safety glass
Door opened indicator freezer: ..... No
Automatic motor-driven ice-maker: ..... No
Connection rating: ..... 90 W
Fuse protection: ..... 10 A
Voltage: ..... 220-240 V
Frequency: ..... 50 Hz
Storage Period in Event of Power Failure (h): ..... 26 h
Door panel options: ..... Not possible
Noise level: ..... 36 dB(A) re 1 pW
Energy Star Qualified: ..... No
Plug type: ..... Gardy plug w/ earthing
Required cutout/niche size for installation (in): ..... x
Dimensions of the packed product: ..... 72.44 x 24.01 x 25.19
Net weight: ..... 137.000 lbs
Gross weight: ..... 148.000 lbs

---

4 242005 207138

# Series 6, built-in fridge-freezer with freezer at bottom, 177.2 x 55.8 cm, flat hinge
# KIS87AF3E8

## The bottom freezer with VitaFresh plus Box: keeps your fruits and vegetables fresh for up to twice as long.

**Performance and consumption**

- Energy Efficiency Class: EU_2010 at a range of energy efficiency classes from A++ to F
- Energy consumption: 225 kWh/yr
- Net Capacity: 270 l
- Noise level: 36 dB(A) re 1 pW

**Design and Styling**

- LED interior light in fridge section

**Convenience & Safety**

- 7 segment electronic control
- Easy Installation
- FreshSense - constant temperature by intelligent sensor technology
- Two Cooling Systems
- Super Cooling: automatic deactivation
- Super Freezing: manual activation
- Holiday mode
- Acoustic open door warning system
- Active Warning System by Temperatur increase, with failure memory function

**Fridge Compartment**

- Fridge Total Net Capacity: 209 l
- 5 safety glass shelves (4 height adjustable), of which 1 x VarioShelf divisible and pushed under shelf, 1 x extendable EasyAccess shelf
- 5 door bins, there of 1x dairy compartment
- Automatic defrost in fridge section

**Freshness System Freshness System**

- 1 VitaFresh plus drawer with humidity control - Fruits and vegetables retain vitamins and stay fresh up to 2 times longer.

**Freezer Section**

- Freezer Capacity: 61 l
- Low Frost
- Freezing capacity: 7 kg/24 h
- Storage time in power failure: 26 h
- Vario Zone - removable safety glass shelves for extra space!
- 2 transparent freezer drawers, incl.1 BigBox

**Dimensions**

- Appliance Dimensions ( H x W x D): 177.2 cm x Appliance width: 55.8 cm x 54.5 cm

**Technical Information**

- Door right hinged, reversible
- Climate Class: SN-T
- Connected load: 90 W
- Nominal voltage: 220 - 240 V

**Accessories**

- bottle holder

**Highlights**

- Low Frost - less icing, faster defrosting!
- 1 VitaFresh plus drawer with humidity control - Fruits and vegetables retain vitamins and stay fresh up to 2 times longer. - keeps fruit and vegetables up to 2 x longer fresh!
- Easy access shelf - easy access and everything in sight
- touch control - enduring elegance - pefectly under control!

**Country Specific Options**

- Gross capacity 276 l
- Gross capacity cooling 212 l
- Gross capacity**** freezer: 64 l (-18°C and below)
- Based on the results of the standard 24-hour test. Actual consumption depends on usage/position of the appliance.

**Environment and Safety**

**Installation**

**General Information**

**Series 6, built-in fridge-freezer with freezer at bottom, 177.2 x 55.8 cm, flat hinge**
**KIS87AF3E8**

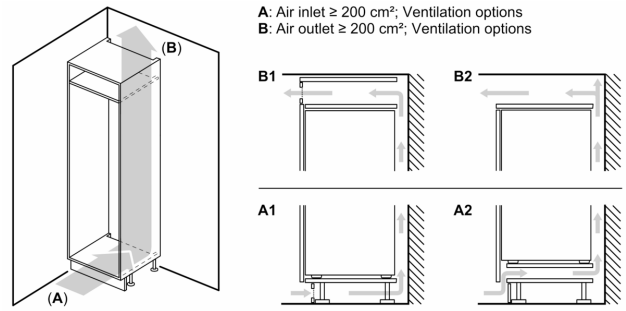


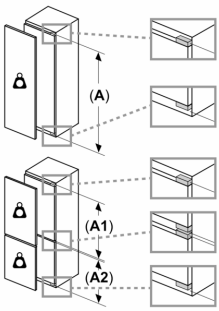


**Maximal permissible weight of the unit fronts**

Fitted unit fronts that exceed the permissible weight may cause damage and result in functional impairment of the hinges
Weight
**A:** Appliance door height including hinges in mm

**B:** Undamped hinge, unit front in kg

**C:** Damped hinge, unit front in kg

**D:** Additional possible load in kg with heavy load kit

| A | B | C | D |
|---|---|---|---|
| 1500-1750 | 22 | 22 | B+5 / C+5 |
| 720-1400 | 19 | 19 | |
| A1 | 15 | 19 | |
| A2 | 15 | 19 | |

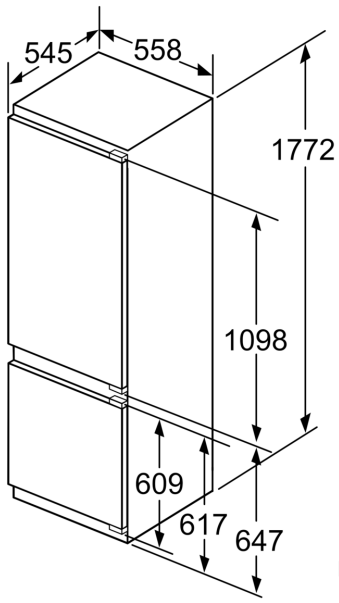


measurements in mm

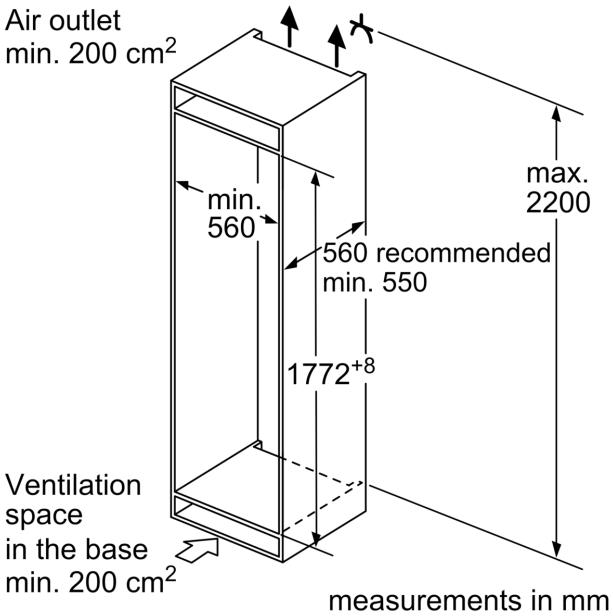


measurements in mm

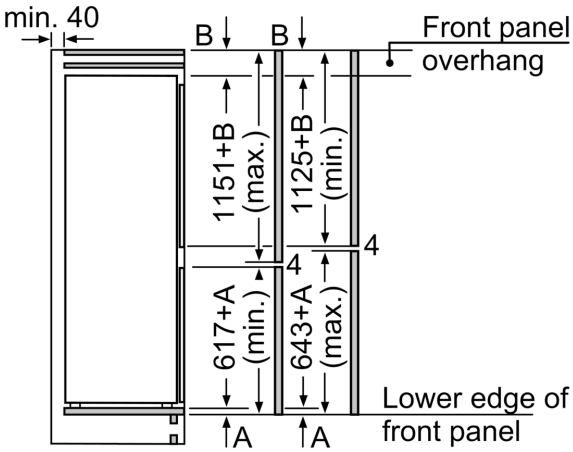


The specified unit door dimensions are valid for a door gap of 4 mm.

measurements in mm

measurements in mm
Recommended gap dimensions for flat hinges

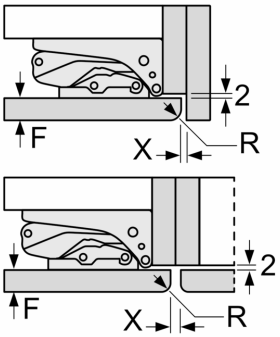


| F | R | X |
|---|---|---|
| 16-19 | 0-3 | 2.5 |
| 20 | 0-1 | 3 |
| | 2-3 | 2.5 |
| 21 | 0-1 | 3 |
| | 2-3 | 2.5 |
| 22 | 0 | 4 |
| | 1 | 3.5 |
| | 2-3 | 3 |

The gap dimensions recommended in the table must be adhered to in order to ensure that appliance doors do not collide with anything when they are opened, and to avoid causing damage to kitchen units.