Series 6, Gas range cooker, Stainless steel
HGW3FSV50S

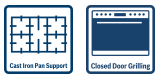

The gas Range Cooker with gas hob: enjoy the benefits of gas when cooking and baking.

- **The stainless-steel gas cooktop**: its high quality and premium design lets you enjoy cooking longer.
- **Low profile stainless steel cooking surface is easily accessible and quick to clean.**
- **High output burner: cooking at up to 3 kW.**
- **Cast Iron Pan Support provides extra support for your heavier pots**
- **and pans.**
- **Closed Door Grilling retains heat and odors within the cooker and reduces your cooking time.**

Built-in / Free-standing: ..... Free-standing
Dimensions: ..... 884-929 x 899 x 607 mm
Length electrical supply cord: ..... 140.0 cm
Net weight: ..... 80.7 kg
Gross weight: ..... 86.3 kg
Heating modes:: .....defrost, rotisserie, Gas grill/broiler, Gas bottom heating, Circulated gas bottom heat
Integrated Cleaning system: ..... Catalytic partial
Included accessories: 1 x rotary spit, 1 x nozzle set for liquid gas, 1 x cross support for espresso, 1 x grid, 1 x universal pan
Broil Element Wattages cavity 1: ..... 3100 W
Power of heating element (kW): ..... 3 kW
Power of 3rd heating element (kW): ..... 1.75 kW
Connection rating: ..... 47 W
Fuse protection: ..... 16 A
Voltage: ..... 220-240 V
Frequency: ..... 50; 60 Hz
Plug type: ..... Gardy plug w/ earthing
Energy input: ..... Gas
Gas type: ..... Nat gas H/E/(L) 20 (25) mbar
Gross weight: ..... 190.000 lbs
Length electrical supply cord: ..... 140.0 cm
Dimensions: ..... 884-929 x 899 x 607 mm
Dimensions of the packed product (HxWxD): ..... 875 x 990 x 705 mm

---

4 242005 212286

Series 6, Gas range cooker, Stainless steel
HGW3FSV50S

The gas Range Cooker with gas hob: enjoy the benefits of gas when cooking and baking.

Cooktop:
- Gas hob
- 1 rapid, 2 standard, 1 economy, 1 wok burner
- Front left: Rapid burner 3 KW
- Rear left: Standard burner 1.75 KW
- Center: Wok burner 4 KW
- Rear right: Standard burner 1.75 KW
- Front right: Economy burner 1 KW
- 1 Hand ignition
- Flame failure safety device
- Cast iron continuous pan supports
- Glass cover lid

Type of oven / heating system:
- Gas oven
- 5cooking functions:
- Defrost setting
- Rotisserie Gas grill Gas bottom heat Circulated gas bottom heat
- Rotary spit

Design:
- Extra large net capacity oven (125 l)
- smooth cavity

Cleaning:
- Full glass inner door
- Catalytic cleaning: Rear wall

Comfort:
- Halogen interior lighting
- Electronic timer
- Storage compartment

Accessory:
- cross support for espresso, grid, nozzle set for liquid gas, rotary spit, universal pan

Technical Information
- Preset for natural gas (20mbar)

Dimensions:
- Appliance dimension (hxwxd): 884 mm x 899 mm x 607 mm
- Adjustable feet by 45 mm

Series 6, Gas range cooker, Stainless steel
HGW3FSV50S

measurements in mm

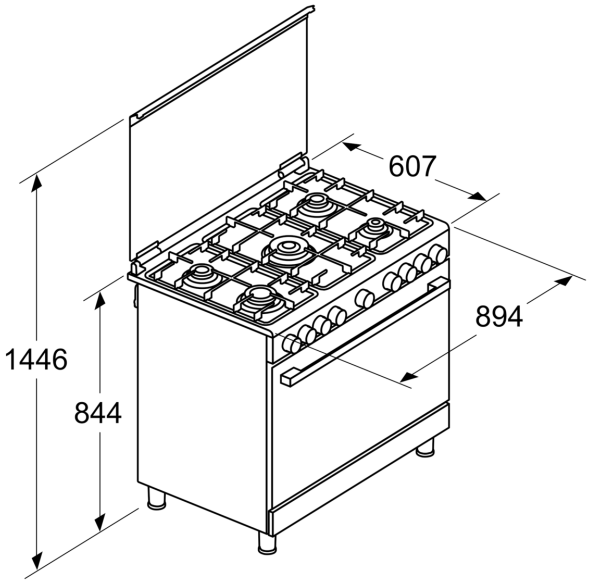

measurements in mm

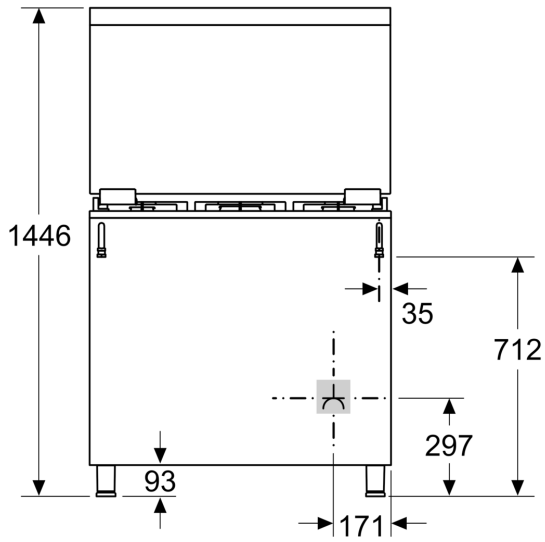

Socket