18" Recessed Handle Special Application

300 Series – Stainless Steel SPE53U55UC

BOSCH
Invented for life

SPE53U55UC
Stainless Steel

Also available in:

White	SPE53U52UC
Black	SPE53U56UC

Bosch dishwashers incorporate 18 unique sound-reducing technologies, to make Bosch the quietest dishwasher brand in the US.

Features & Benefits
46 dBA: Quietest dishwasher brand.
Water softener ensures optimally spot-free and shiny dishes.
RackMatic® offers 3 height levels, for 9 possible rack positions.
AquaStop® Plus 4-Part leak protection prevents water damage 24/7.
24h Delay Start Timer lets you run your dishwasher at off-peak times.

General Properties	
Number of wash cycles	4
Number of options	4
dBA	46
Third rack	No
Rack adjustability	RackMatic®
Tub material	Stainless steel
Control type	Buttons
Concealed heating element	Yes
Leak protection system	24/7 AquaStop® Plus
Water softener	Yes
Five-level wash	Yes
ChildLock	Yes
Special features	24h delay start timer
Efficiency	
Water usage per cycle	3.0
Energy efficiency class	Tier 1
ENERGY STAR® qualified	Yes
Total annual energy consumption (kWh)	259 kWh
Total annual water consumption (g)	645
Capacity	
Number of place settings	9

ENERGY STAR

ADA COMPLIANT

Technical Details	
Watts (W)	1440 W
Current (A)	12 Amps
Volts (V)	120 V
Frequency (Hz)	60 Hz
Power cord length	47 1/4"
Minimum water pressure (lb/sin)	7
Length inlet hose (in)	65"
Length outlet hose (in)	80 5/8"
Dimensions & Weight	
Overall appliance dimensions (HxWxD) (in)	32 1/16" x 17 5/8" x 22 9/16"
Required cutout size (HxWxD) (in)	32 1/8" x 17 3/4" x 24"
Adjustable feet	Yes
Net weight (lbs)	72 lbs
Accessories—Optional	
Dishwasher Softener Salt (4.4 lbs)	SGZ9092UC
Dishwasher Drain Hose Extension 76 3/4"	SGZ1010UC
Dishwasher Accessory Kit	SMZ5000
Hinge for 4" Toekick Height Installation	SMZ5003

Accessories: To purchase Bosch accessories, cleaners & parts please visit www.bosch-home.com/us/store or call 1-800-944-2904 (Mon to Fri 5 am to 6 pm PST, Sat 6 am to 3 pm PST).

Notes: All height, width and depth dimensions are shown in inches. BSH reserves the absolute and unrestricted right to change product materials and specifications, at any time, without notice. Consult the product's installation instructions for final dimensional data and other details prior to making cutout.

Warranties: Please see Use & Care manual or Bosch website for statement of limited warranty.

For more information on our entire line of products, go to www.bosch-home.com/us or call 1-800-944-2904

© BSH Home Appliances Corporation. All rights reserved. Bosch is a registered trademark of Robert Bosch GmbH.

18" Recessed Handle Special Application

300 Series – Stainless Steel SPE53U55UC

BOSCH
Invented for life

Installation Details

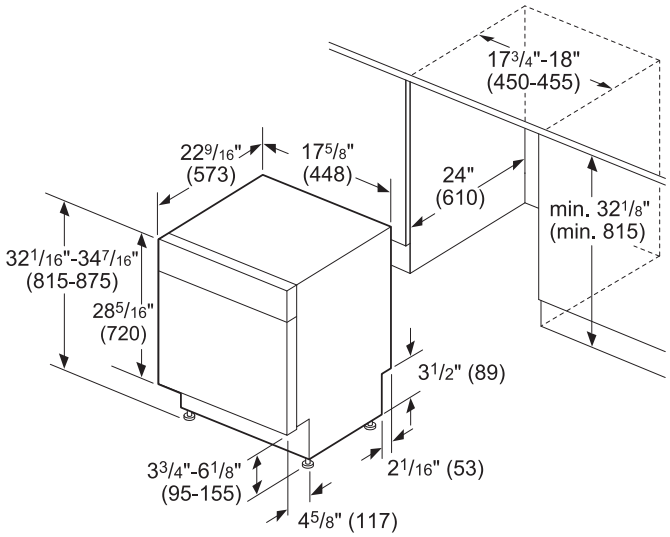

measurements in inches (mm)

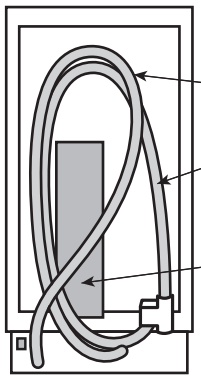

Included:

- Pre-connected drain hose
- Pre-connected AquaStop® inlet hose
- Toe-kick
- Power cord with junction box

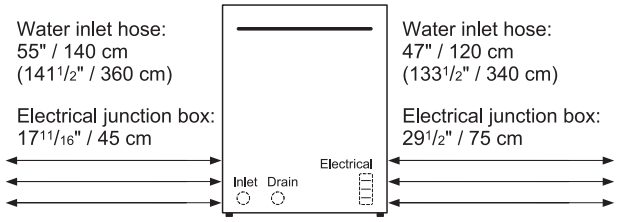

All connections at the rear of the appliance.
( ) values with extension kit.

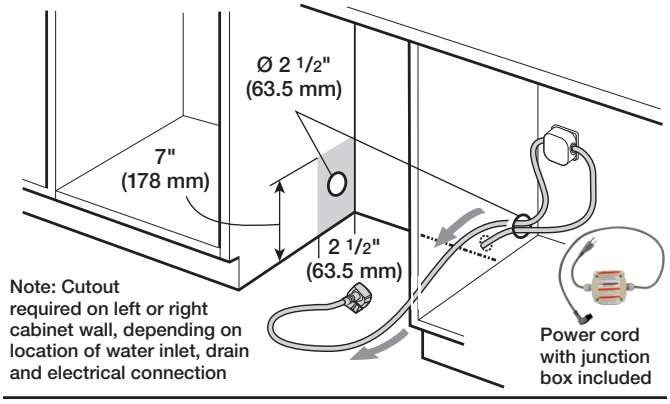

Example of Hardwire Installation

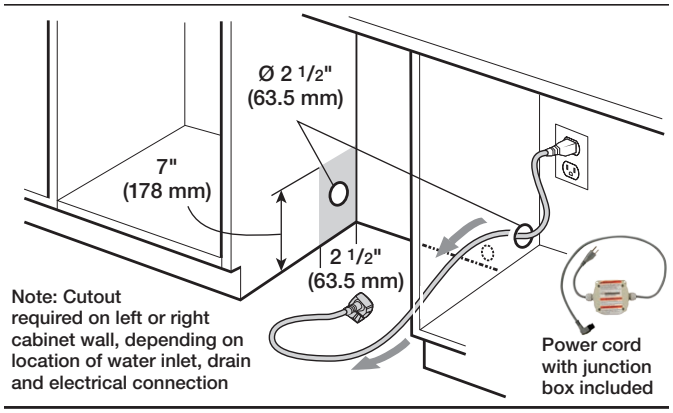

Example of an Electrical Receptacle Installation

Accessories: To purchase Bosch accessories, cleaners & parts please visit www.bosch-home.com/us/store or call 1-800-944-2904 (Mon to Fri 5 am to 6 pm PST, Sat 6 am to 3 pm PST).

Notes: All height, width and depth dimensions are shown in inches. BSH reserves the absolute and unrestricted right to change product materials and specifications, at any time, without notice. Consult the product's installation instructions for final dimensional data and other details prior to making cutout.

Warranties: Please see Use & Care manual or Bosch website for statement of limited warranty.

For more information on our entire line of products, go to www.bosch-home.com/us or call 1-800-944-2904

© BSH Home Appliances Corporation. All rights reserved. Bosch is a registered trademark of Robert Bosch GmbH.

18" Recessed Handle Special Application

300 Series – Stainless Steel SPE53U55UC

Installation Details

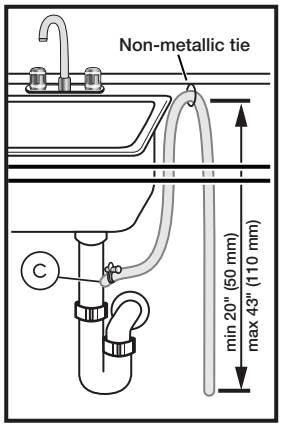

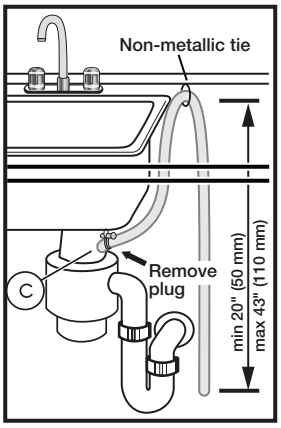

Note: Plumbing installations will vary - refer to local codes. Drain hose included is 88 5/8" (225 cm) and can be extended to a maximum of 165 3/8" (420 cm).

Always use the approved drain hose extension kit (SGZ1010UC).

Ensure a portion of the drain hose is raised between min. 20" (50 cm) and max. 43" (110 cm) above the cabinet floor.

Accessories: To purchase Bosch accessories, cleaners & parts please visit www.bosch-home.com/us/store or call 1-800-944-2904 (Mon to Fri 5 am to 6 pm PST, Sat 6 am to 3 pm PST).

Notes: All height, width and depth dimensions are shown in inches. BSH reserves the absolute and unrestricted right to change product materials and specifications, at any time, without notice. Consult the product's installation instructions for final dimensional data and other details prior to making cutout.

Warranties: Please see Use & Care manual or Bosch website for statement of limited warranty.

For more information on our entire line of products, go to www.bosch-home.com/us or call 1-800-944-2904

© BSH Home Appliances Corporation. All rights reserved. Bosch is a registered trademark of Robert Bosch GmbH.