36" Gas Cooktop

800 Series – Black w/Black Stainless Knobs NGM8646UC

BOSCH
Invented for life

NGM8646UC
Black w/Black Stainless Knobs

Also available in:

Stainless Steel	NGM8656UC

Bosch gas cooktops are engineered to perform precisely, offering high heat and low simmer options for optimal cooking flexibility.

Features & Benefits
Powerful 19,000 BTU burner for boiling, searing and stir-frying
OptiSim® Burner – simmer delicate sauces and melt chocolate without scorching
Electronic re-ignition will automatically re-ignite the burner in case the flame goes out
Continuous grates make moving heavy pots easier
Distinctive red LED light indicates burners are on

General Properties	
Knob material	Metal
Sealed burners	Yes
Grate material	Cast iron
Element Performance	
Total BTU load (NG / LP)	52,400 / 47,300
Power of front left burner (NG / LP)	9,300 / 9,100
Power of back left burner (NG / LP)	9,300 / 9,100
Power of center burner (NG / LP)	19,000 / 15,000
Power of back right burner (NG / LP)	5,500 / 5,000
Power of front right burner (NG / LP)	9,300 / 9,100
Technical Details	
Watts	360 W
Circuit breaker	15 A
Volts	120 V
Frequency	60 Hz
Plug type	3 prong
Power cord length	60"
Energy source	Gas
Convertible to LP (kit required)	Yes

Dimensions & Weight	
Overall appliance dimensions (HxWxD)	3 13/16" x 37" x 21 1/4"
Required cutout size (HxWxD)	3 13/16" x 34 15/16" x 19 1/8"
Minimum distance from counter front	1 7/8"
Minimum distance from rear wall	3"
Net weight	39 lbs
Accessories – Included	
Included	LP conversion kit

Accessories – Optional

HEZ298102
Wok ring

HEZGR301
Griddle

Accessories: To purchase Bosch accessories, cleaners & parts please visit www.bosch-home.com/us/store or call 1-800-944-2904 (Mon to Fri 5 am to 6 pm PST, Sat 6 am to 3 pm PST).

Notes: All height, width and depth dimensions are shown in inches. BSH reserves the absolute and unrestricted right to change product materials and specifications, at any time, without notice. Consult the product's installation instructions for final dimensional data and other details prior to making cutout.

Warranties: Please see Use & Care manual or Bosch website for statement of limited warranty.

For more information on our entire line of products, go to www.bosch-home.com/us or call 1-800-944-2904

© BSH Home Appliances Corporation. All rights reserved. Bosch is a registered trademark of Robert Bosch GmbH.

36" Gas Cooktop

800 Series – Black w/Black Stainless Knobs NGM8646UC

Installation Details

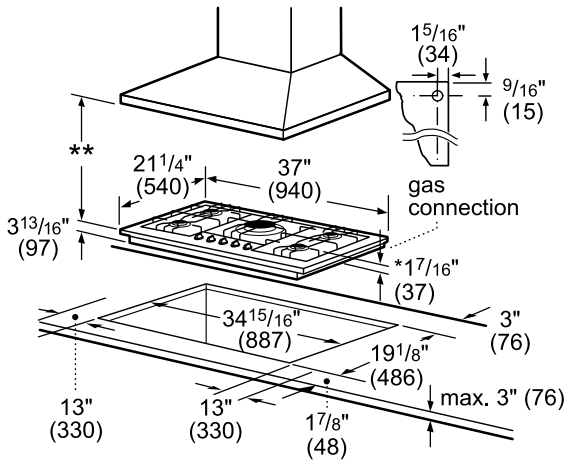

* Dimension from countertop to top of grates in front of 1 7/16" (37).

** When installed in combination with a hood, refer to hood manufacturers requirements for installation.

Measurement in inches (mm)

Installation above Wall Ovens

30" Built-in oven - under gas cooktop

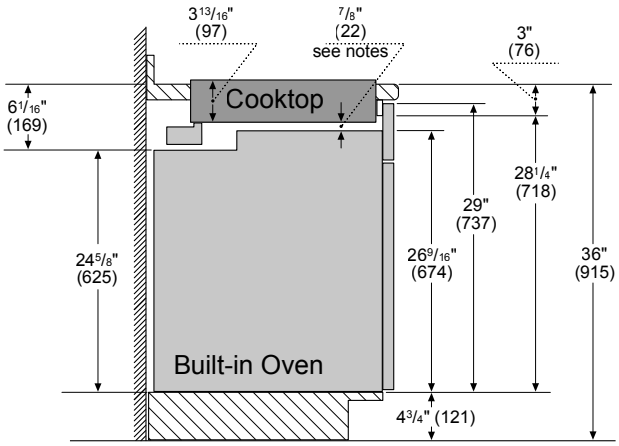

Notes:

Dimensions based on standard countertop height (36" with 4 3/4" toe kick including base plate).

The built-in oven can be installed below the gas cooktop as long as there is no contact between the bottom of the cooktop and the top of the oven.

Measurements in inches (mm)

Side View Gas Cooktop Installation

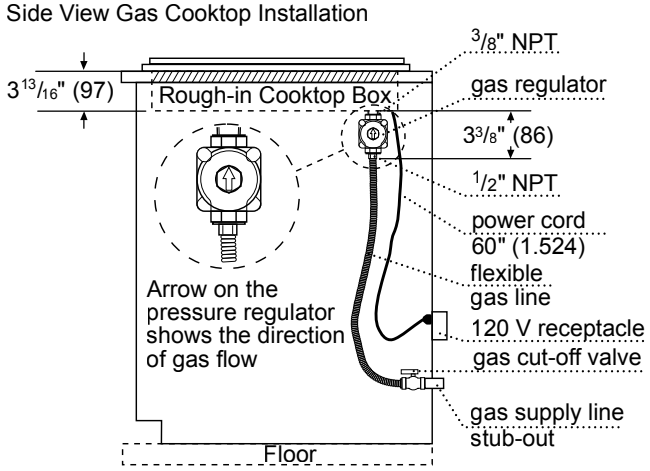

Measurements in inches (mm)

Accessories: To purchase Bosch accessories, cleaners & parts please visit www.bosch-home.com/us/store or call 1-800-944-2904 (Mon to Fri 5 am to 6 pm PST, Sat 6 am to 3 pm PST).

Notes: All height, width and depth dimensions are shown in inches. BSH reserves the absolute and unrestricted right to change product materials and specifications, at any time, without notice. Consult the product's installation instructions for final dimensional data and other details prior to making cutout.

Warranties: Please see Use & Care manual or Bosch website for statement of limited warranty.

For more information on our entire line of products, go to www.bosch-home.com/us or call 1-800-944-2904

© BSH Home Appliances Corporation. All rights reserved. Bosch is a registered trademark of Robert Bosch GmbH.

36" Gas Cooktop

800 Series – Black w/Black Stainless Knobs NGM8646UC

Installation Details

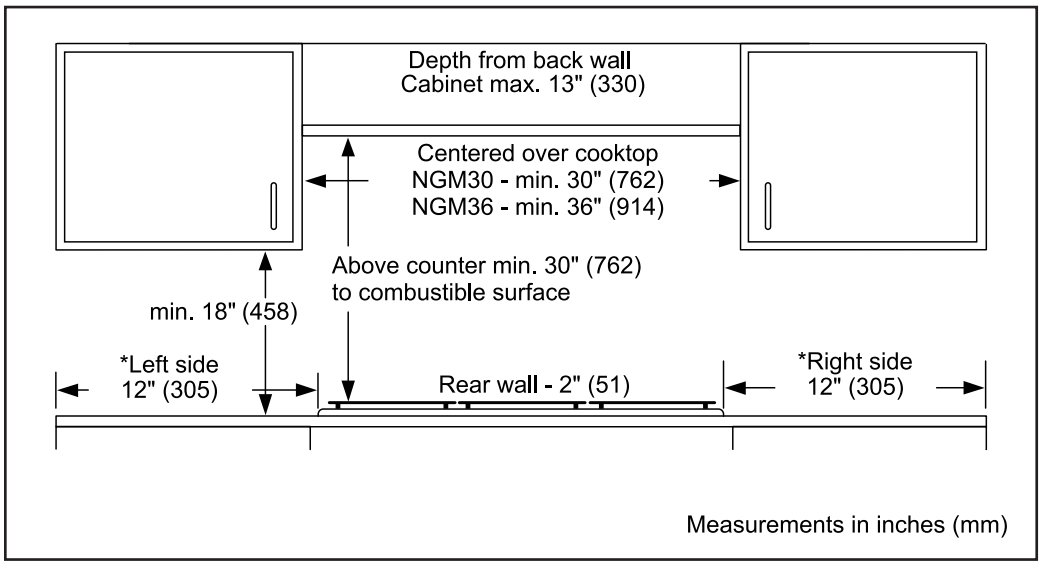

Accessories: To purchase Bosch accessories, cleaners & parts please visit www.bosch-home.com/us/store or call 1-800-944-2904 (Mon to Fri 5 am to 6 pm PST, Sat 6 am to 3 pm PST).

Notes: All height, width and depth dimensions are shown in inches. BSH reserves the absolute and unrestricted right to change product materials and specifications, at any time, without notice. Consult the product's installation instructions for final dimensional data and other details prior to making cutout.

Warranties: Please see Use & Care manual or Bosch website for statement of limited warranty.

For more information on our entire line of products, go to www.bosch-home.com/us or call 1-800-944-2904

© BSH Home Appliances Corporation. All rights reserved. Bosch is a registered trademark of Robert Bosch GmbH.