Serie | 4, vented tumble dryer, 7 kg
WTA74201AU

Optional accessories

WTZ11311 : Stacking kit

The vented dryer with Sensor Drying Technology: dry your laundry no longer than necessary and save energy.

- AutoDry saves time and energy by automatically stopping the drying process once it's complete.
- **Sensitive Drying System:** ensures soft, even drying with its gentle drum structure.
- Anti-Vibration Side Panels reduce vibrations and ensure greater stability during the washing and spinning process.
- **Time remaining:** Shows up on the display ensuring visibility into remaining time of your drying program.
- Anti-Vibration Side Panels reduce vibrations and ensure greater stability during the washing and spinning process

Technical Data

Built-in / Free-standing :	Free-standing
Removable top :	No
Door hinge :	Right
Length electrical supply cord (cm) :	145.0
Height of removable worktop (mm) :	842
Dimensions of the product (mm) :	842 x 598 x 601
Net weight (kg) :	33.033
EAN code :	4242002938387
Connection Rating (W) :	2000
Current (A) :	10
Voltage (V) :	220-240
Frequency (Hz) :	50
Approval certificates :	CE, VDE
Capacity cotton (kg) - NEW (2010/30/EC) :	7.0
Energy efficiency rating :	C
Energy consumption electric dryer, full load - NEW (2010/30/EC) (kWh) :	4.10
Standard cotton programme time at full load (min) :	130
Energy consumption electric dryer, partial load - NEW (2010/30/EC) (kWh) :	2.40
Standard cotton programme time at partial load (min) :	80
Weighted annual energy consumption, electric dryer - NEW (2010/30/EC) (kWh) :	504.0
Weighted programme time (min) :	101

4 242002 938387

Serie | 4, vented tumble dryer, 7 kg
WTA74201AU

The vented dryer with Sensor Drying Technology: dry your laundry no longer than necessary and save energy.

Capacity

- 7 kg capacity

Consumption rates

- 2 Star Energy Rating

Programmes

- Cottons and Easy Care, Wool, Mixed Load, Towels, Timed program warm, Timed program cold, Sportswear, Super Quick 40 minutes program, Shirts/blouses, Delicates
- Touch control buttons: start/pause, Low Heat, Easy Iron, Programme progress indicator, Fine-tuning of drying aim, 24 h end time delay
- Anti crease cycle 120 min at the end of the programme

Performance

- Sensor drying, monitors the temperature and moisture content to ensure garments are dried to the desired setting
- Sensitive Drying System for soft and even drying of clothes
- AntiVibration design: for greater stability and quietness
- Child-proof lock

Convenience

- 2 time-based programs
- Warning indicator for lint filter
- Easy-to-use program selector for standard, timed and special programs
- End of cycle indicator

Design

- Large LED display for easy use
- Glass door with 150 ° opening angle

Technical Information

- Dimensions (H x W x D): 84.2 cm x 59.8 cm x 60.1 cm (63cm with door frame)

Serie | 4, vented tumble dryer, 7 kg
WTA74201AU

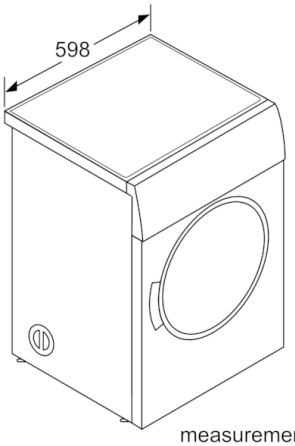

measurements in mm

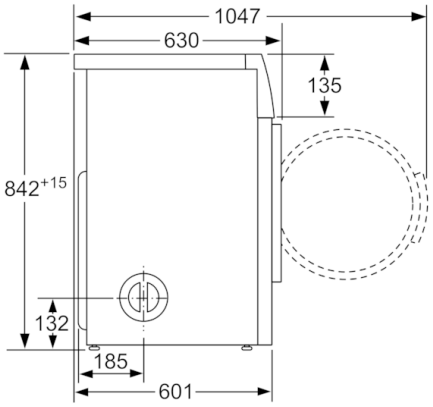

measurements in mm

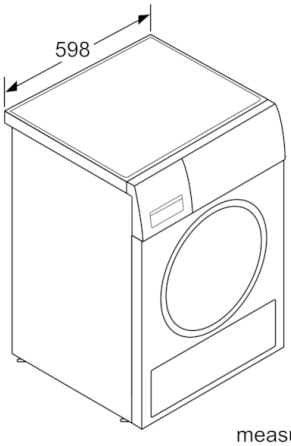

measurements in mm