Series 4, Slideout rangehood, 60 cm, Silver metallic
DFS067A51A



Slideout rangehood: built-in design that integrates with kitchen cabinetry for a clean finish.

- **SilentPowerDrive**: The quiet and powerful motor for rangehoods.
- **Intensive speed with reset**: Clears strong odours, then automatically returns to normal.
- **Metal grease filters**: Easy to clean, dishwasher safe design for fresher kitchen air.
- **LED lighting**: Energy-efficient, bright, even cooktop illumination.
- **Push button control**: For simple and convenient adjustment of your rangehood settings.

DWZ2IT1I4 Clean Air Standard recirculation kit

Typology:	Pull-out
Length electrical supply cord:	175 cm
Required niche size for installation (HxWxD):	385 x 524.0 x 290 mm
Height of the chimney:	GENERAL.N_A mm
Minimum distance above an electric cooktop:	600 mm
Minimum distance above a gas cooktop:	650 mm
Net weight:	11.2 kg
Type of control:	Electronic
Number of power settings:	3-stages + intensive setting
Max. air extraction:	399 m^3/h
Boost position output recirculating:	628 m^3/h
Max. air recirculation:	358 m^3/h
Boost position air extraction:	728 m^3/h
Number of lights:	2
Noise level:	53 dB(A) re 1 pW
Diameter of air outlet:	150 mm
Grease filter material:	Washable stainless steel
EAN code:	4242005252442
Connection rating:	144 W
Fuse protection:	10 A
Voltage:	220-240 V
Frequency:	50; 60 Hz
Plug type:	Standard 10 Amp plug
Installation type:	Built-in

4 242005 252442

Series 4, Slideout rangehood, 60 cm, Silver metallic
DFS067A51A

Slideout rangehood: built-in design that integrates with kitchen cabinetry for a clean finish.

- Appliance width: 598 mm
- Install into a 60cm wide upper kitchen cabinet
- Suitable for ducted or recirculated extraction
- Accessory required for recirculation mode: Standard recirculation kit

Design

- Appliance colour: metallic silver

Comfort

- Push button controls (3 power settings plus intensive setting) with LED display
- Intensive operation automatic revert - 6min
- Automatic after running (10 minutes)
- 2 x LED Lights
- Colour Temperature: 3500 K

Cleaning

- Stainless steel filter covers
- Dishwasher safe Metal grease filters

Performance

- Extraction rate according to EN 61591 ø 15 cm: max. Normal use 399 m^3/h. Intensive 728 m^3/h
- Extraction rate exhaust air according to EN 61591: max. 728 m^3/h
- Noise min./max. Normal Level: 41/53 dB
- 2 high-performance fans, SilentPowerDrive: Efficient BLDC technology
- SilentPowerDrive: Efficient BLDC technology

Planning and installation information

- Easy installation system
- Appliance dimensions (HxWxD): 426 x 598 x 290 mm
- Installation dimensions (HxWxD): 385 x 524 x 290 mm
- Diameter pipe Ø 150 mm (Ø 150 mm enclosed)
- Electrical cable length 1.75 m

Consumption Data

- Power rating: 144 W

Series 4, Slideout rangehood, 60 cm, Silver metallic
DFS067A51A

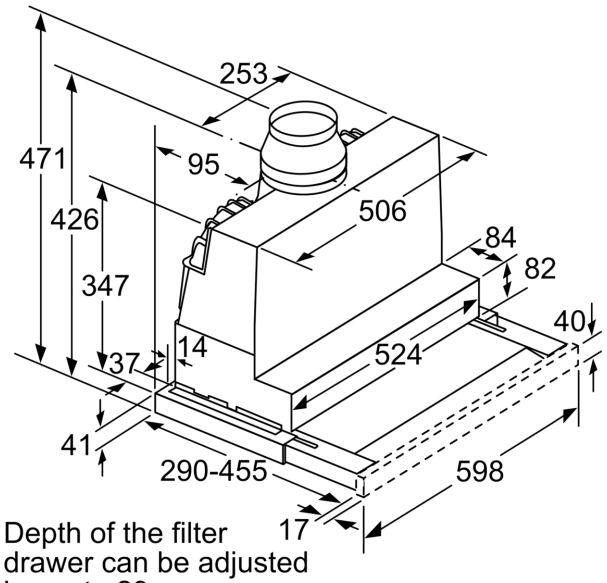

Depth of the filter drawer can be adjusted by up to 29 mm

measurements in mm

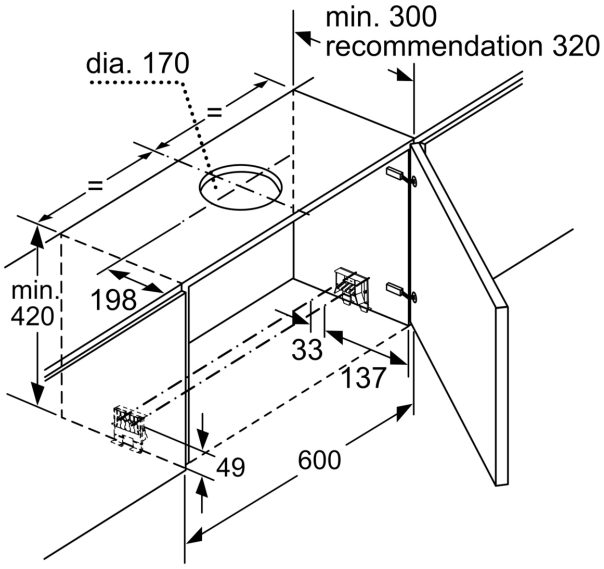

measurements in mm

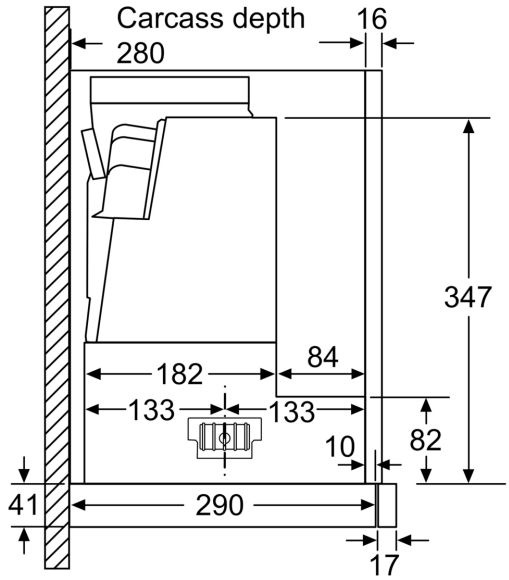

measurements in mm

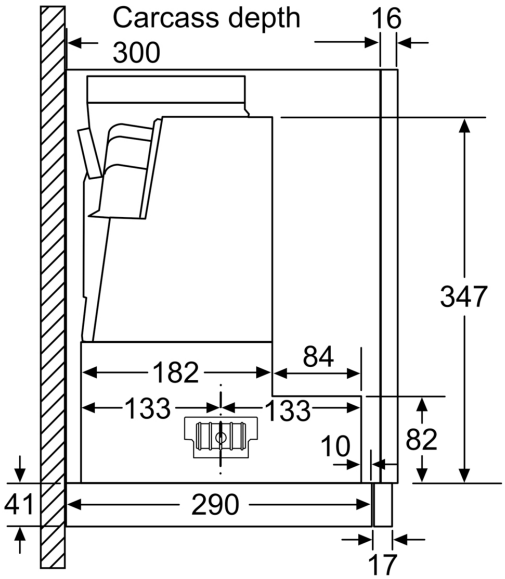

measurements in mm

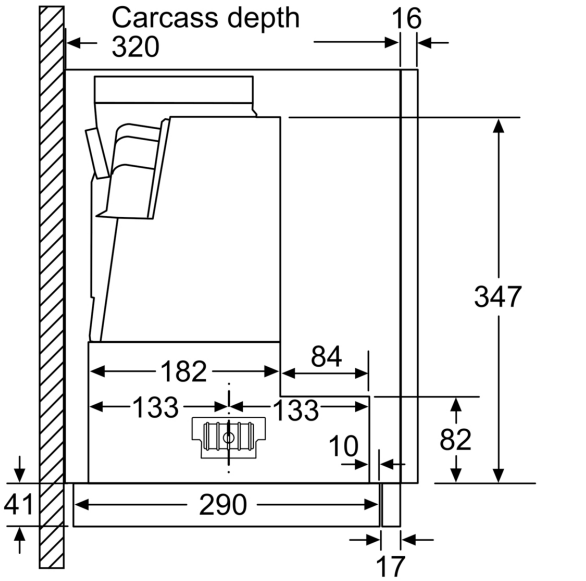

measurements in mm

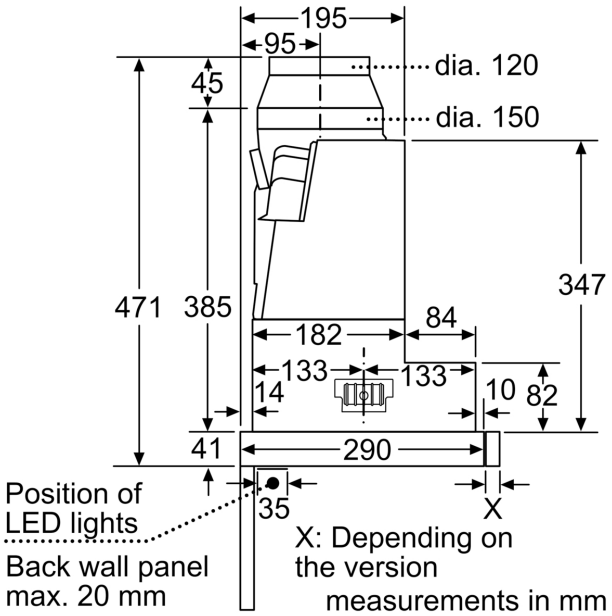

measurements in mm

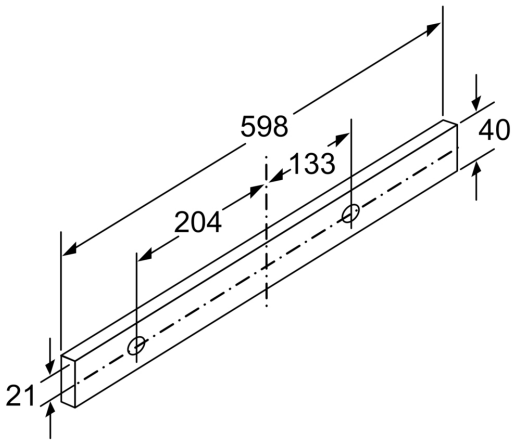

measurements in mm