Series 2, Built-In Microwave Oven, Black
BEL653MB4A



The built-in microwave that fits into a 38 cm niche: use it for extra fast thawing, heating and perfect preparation of foods.

- **AutoPilot 8**: Every dish is a perfect success thanks to 8 pre-set automatic programmes.
- **Microwave function**: Time-saving preparation, defrosting and reheating of dishes.
- **QuickStart**: Heat up your food with just a touch of one button.
- **Grill function**: Fast, flawless grilling results.
- **Cleaning Assistance**: less cleaning effort thanks to the new cleaning option, which can be especially used for cleaning of light soiling.

Addtional function:	Microwave only
Color / Material Front:	Black
Built-in / Free-standing:	Built-in
Door opening:	Button
Door colour:	Black
Cleaning system:	Cleaning Assistance
Control Panel Material:	Plastic
Dimensions (HxWxD):	382x595x375 mm
Dimensions of the packed product (HxWxD):	445x441x680 mm
Required niche size for installation (HxWxD):	380-382 x 560-568 x 550 mm
Cavity dimensions:	205.0 x 310 x 334.0 mm
Cavity capacity:	25 l
Max. microwave power level[1]:	800 W
Number of interior lights:	1
Net weight:	11.3 kg
Gross weight:	16.6 kg
EAN code:	4242005477203
Connection rating:	1270 W
Fuse protection:	10 A
Voltage:	230-240 V
Frequency:	50 Hz
Length electrical supply cord:	130 cm

4 242005 477203

[1] Intelligent inverter technology: maximum output power will be regulated to 600 W when used in longer operation

Series 2, Built-In Microwave Oven, Black
BEL653MB4A

The built-in microwave that fits into a 38 cm niche: use it for extra fast thawing, heating and perfect preparation of foods.

Microwave and heating methods

- Max. Power: 800 W; 5 Microwave power settings: 90 W, 180 W, 360 W, 600 W, 800 W
- Grill 1 KW
- Grill and microwave power levels 90 W, 180 W, 360 W combinable
- Microwave and grill can be used separately and in combination
- Cavity volume: 25 l

Design

- lacquered grey cavity

Cleaning

- Cleaning Assistance (HydroClean program)

Convenience

- LED-display control
- Electronic clock/timer with end time programming
- Rotary control knobs
- User-friendly electronics: extremely easy and comfortable operation
- AutoPilot, 8 automatic programs
- 4 defrost and 3 cooking programmes in microwave function
- Favourite button for individual settings (1 setting)
- Quick Start button: one tap to maximum microwave power for 30 seconds
- LED light
- 29 cm Glass turntable
- Left hinged door
- open door button

Accessories

- 1 x grid

Safety Features

- Child lock, Automatic safety switch off function, Door contact switch
- Integrated cooling fan

Technical Information

- Length of mains cable: 130 cm
- Total connected load electric: 1.27 KW
- Nominal voltage: 230 - 240 V
- Appliance: 382 x 595 x 375 mm

Dimensions

- Appliance dimensions (HxWxD): 382 mm x 595 mm x 375 mm
- Installation dimensions (HxWxD): 380 mm - 382 mm x 560 mm - 568 mm x 550 mm
- Please reference the built-in dimensions provided in the installation drawing

Series 2, Built-In Microwave Oven, Black
BEL653MB4A

measurements in mm
Installation of a 25 l microwave in a high cupboard

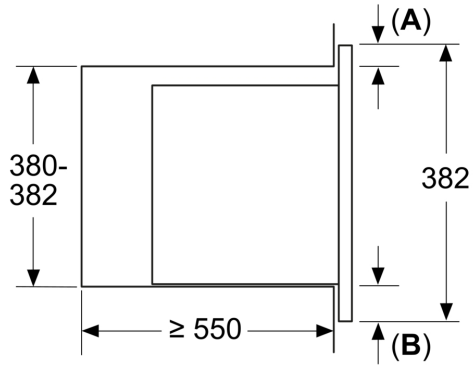

A: Overhang at top: 1 mm
B: Overhang at bottom: 1 mm

measurements in mm

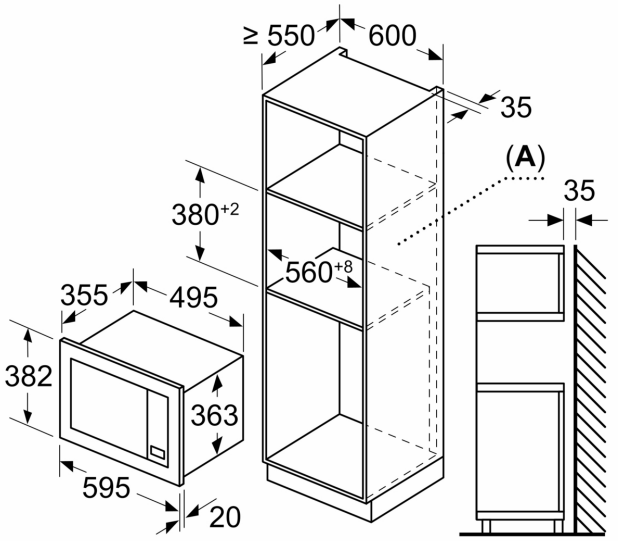

A: Back panel open