Series 2, washing machine, front loader, 6 kg, 1000 rpm
WAB20260GC

WMZ20490	Platform with pull-out
WMZ2200	Floor securing component
WMZ2381	Extension for cold water inlet /Aquastop

The washing machine with VarioPerfect™: you decide whether washing should be super-fast or super-efficient.

- **AllergyPlus**: specially developed for the needs of allergy sufferers and sensitive skin.
- **SpeedPerfect**: perfectly clean in up to 65% less time.
- **VarioPerfect™**: takes up to 65% less time or uses up to 50% less energy – by simply selecting SpeedPerfect or EcoPerfect functions.
- **Super Quick 30 is a convenient method of freshening up light-solied laundry in 30 minutes**
- **TimeDelay Function: select the time within the next 24 hours when your laundry needs to be ready.**

Built-in / Free-standing:	Free-standing
Door hinge:	Left
Color / Material body:	White
Length electrical supply cord:	160.0 cm
Height of the appliance:	848 mm
Dimensions of the product:	848 x 598 x 550 mm
Wheels:	No
Net weight:	65.6 kg
Drum volume:	44 l
Door Frame:	White
Color Buttons:	white
Color Dial:	silver white
Noise level washing:	57 dB(A) re 1 pW
Connection rating:	2300 W
Fuse protection:	10 A
Voltage:	220-240 V
Frequency:	50 Hz
Energy Star Qualified:	Yes
Cord Included:	No
Plug type:	GB plug
Length of supply hose (in):	59.05 "
Dimensions of the packed product:	33.85 x 24.80 x 25.19
Net weight:	145.000 lbs
Gross weight:	146.000 lbs
Length of drain hose:	125.00 cm
Length of supply hose:	150.00 cm
Dimensions of the packed product (HxWxD):	860 x 640 x 630 mm
Gross weight:	66.2 kg
Connection rating:	2300 W
Fuse protection:	10 A
Voltage:	220-240 V
Frequency:	50 Hz
Water protection system:	Multiple water protection
Maximum spin speed:	1000 rpm
Spin speed options:	Variable
Digital countdown indicator:	Yes
Drying progress indicator:	LED
Maximum capacity in kg (EU 2017/1369):	6.0 kg

4 242002 769943

Series 2, washing machine, front loader, 6 kg, 1000 rpm
WAB20260GC

The washing machine with VarioPerfect™: you decide whether washing should be super-fast or super-efficient.

Main features

- varioPerfect: time or energy optimized programs with perfect wash performance
- ActiveWater: water management system

Programmes

- Special programmes: Easy-care plus mixture, shirts, sports/fitness, AllergyPlus / Hygiene, Super 15 min / Super 30 min, Cold, Standard cold - 40°C

Convenience and Safety

- Short-stroke buttons: Start, Rinse plus, EcoPerfect, SpeedPerfect, Temperature, Spin speed reduction/Yes
- display for programme progress, temperature, spin speed, remaining time and 24 h endtime delay
- Fully electronic control dial for all wash- and special programs
- Multiple water protection
- AquaSensor for optimum rinse results: Yes
- Aquatronic wash system
- Foam detection system
- Unbalanced load detection
- 24 h end time delay / remaining time
- 30 cm-porthole, white with 140° opening door
- Childproof door lock

Technical information

- Noise level washing dB (A) re 1 pW: 57
- Noise level spinning dB (A) re 1 pW: 73
- Dimensions (H x W x D): 84.8 x 59.8 x 55 cm

Series 2, washing machine, front loader, 6 kg, 1000 rpm
WAB20260GC

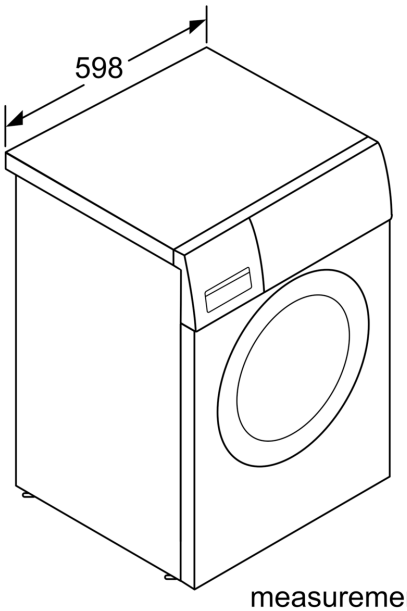

measurements in mm

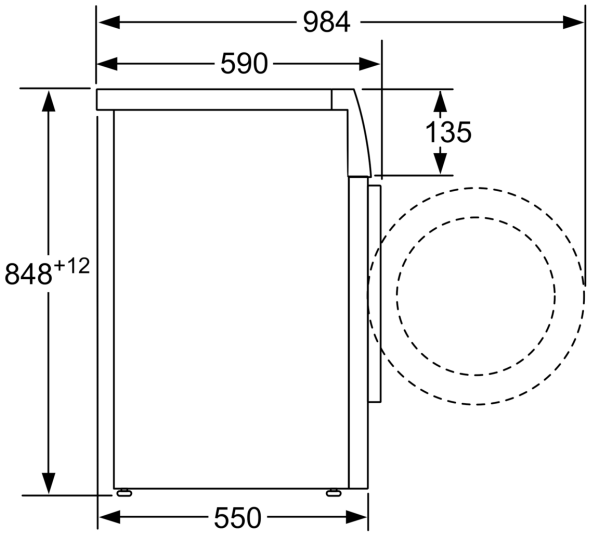

measurements in mm