BOSCH

Register your new device on MyBosch now and get free benefits:
bosch-home.com/welcome

MyBosch

Induction hob with integrated ventilation system

PVQ...H2...

[en] Information for Use

You can find additional information and explanations online.
Scan the QR code on the title page.

Table of contents

1 Safety 2
2 Avoiding material damage 4
3 Environmental protection and saving energy 5
4 Suitable cookware 6
5 Familiarising yourself with your appliance 6
6 Software update 8
7 Operating modes 8
8 Before using for the first time 9
9 Basic operation 9
10 Ventilation control 10
11 Favourite button 11
12 CombiZone 11
13 Time-setting options 11
14 PowerBoost 12
15 PanBoost 12
16 Keep-warm function 13
17 PerfectFry Sensor 13
18 Childproof lock 14
19 Pause 14
20 Individual safety switch-off 14
21 Basic settings 14
22 Cookware test 16
23 Home Connect 16
24 Cleaning and servicing 18
25 Troubleshooting 20
26 Disposal 22
27 Customer Service 22
28 Information regarding Free and Open Source Software 22
29 Declaration of Conformity 23
30 Test dishes 23

1 Safety

Observe the following safety instructions.

1.1 General information

- Read this instruction manual carefully.
- Keep the instructions, the appliance and the product information safe for future reference or for the next owner.
- Do not connect the appliance if it has been damaged in transit.

1.2 Intended use

Only a licensed professional may connect appliances without plugs. Damage caused by incorrect connection is not covered under the warranty.
The appliance can only be used safely if it is correctly installed according to the safety instructions. The installer is responsible for ensuring that the appliance works perfectly at its installation location.

Only use this appliance:
- To prepare meals and drinks.
- Under supervision. Never leave the appliance unattended when cooking for short periods.
- in private households and in enclosed spaces in a domestic environment.
- Up to an altitude of 2000 m above sea level.

Do not use the appliance:
- On boats or in vehicles.
- With an external timer or a separate remote control. This does not apply if operation with appliances included in EN 50615 is switched off.
- To extract hazardous or explosive substances and vapours.
- To extract small parts and liquids.

If you wear an active implantable medical device (e.g. a pacemaker or defibrillator), check with your doctor that it complies with Council Directive 90/385/EEC of 20th June 1990, EN 45502-2-1 and EN 45502-2-2, and that it has been chosen, implanted and programmed in accordance with VDE-AR-E 2750-10. If these conditions are satisfied, and

if, in addition, non-metal cooking utensils and cookware with non-metal handles are used, it is safe to use this induction hob as intended.

1.3 Restriction on user group

This appliance may be used by children aged 8 or over and by people who have reduced physical, sensory or mental abilities or inadequate experience and/or knowledge, provided that they are supervised or have been instructed on how to use the appliance safely and have understood the resulting dangers.
Do not let children play with the appliance.
Children must not perform cleaning or user maintenance unless they are at least 15 years old and are being supervised.
Keep children under the age of 8 years away from the appliance and power cable.

1.4 Safe use

⚠ WARNING – Risk of suffocation!
Children may breathe in or swallow small parts, causing them to suffocate.
- Keep small parts away from children.
- Do not let children play with small parts.

Children may put packaging material over their heads or wrap themselves up in it and suffocate.
- Keep packaging material away from children.
- Do not let children play with packaging material.

⚠ WARNING – Risk of poisoning!
Risk of poisoning from flue gases being drawn back in. Room-air-dependent heat-producing appliances (e.g. gas, oil, wood or coal-operated heaters, continuous flow heaters or water heaters) obtain combustion air from the room in which they are installed and discharge the exhaust gases into the open through an exhaust gas system (e.g. a chimney). With the extractor hood switched on, air is extracted from the kitchen and the adjacent rooms. Without an adequate supply of air, the air pressure falls below atmospheric pressure. Toxic gases from the chimney or the extraction shaft are sucked back into the living space.

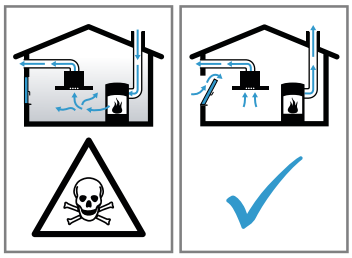

- Always ensure adequate fresh air in the room if the appliance is being operated in exhaust air mode at the same time as a room-air-dependent heat-producing appliance is being operated.
- It is only possible to safely operate the appliance if the pressure in the room in which the heating appliance is installed does not fall below 4 Pa (0.04 mbar). This can be achieved whenever the air needed for combustion is able to enter through openings that cannot be sealed, for example in doors, windows, incoming/exhaust air wall boxes or by other technical means. An incoming/exhaust air wall box alone is not sufficient to ensure compliance with the limit.
- In any case, consult your responsible chimney sweep. They are able to assess the house's entire ventilation setup and will suggest the suitable ventilation measures to you.
- Unrestricted operation is possible if the appliance is operated exclusively in circulating-air mode.

⚠ WARNING – Risk of fire!
Leaving fat or oil cooking on an unattended hob can be dangerous and may lead to fires.
- Never leave hot oil or fat unattended.
- Never attempt to extinguish a fire using water; instead, switch off the appliance and then cover with a lid or a fire blanket.

The cooking surface becomes very hot.
- Never place flammable objects on the cooking surface or in its immediate vicinity.
- Never place objects on the cooking surface.

The appliance will become hot.
- Do not keep combustible objects or aerosol cans in drawers directly underneath the hob.

Hob covers can cause accidents, for example due to overheating, catching fire or materials shattering.
- Do not use hob covers.

After every use, switch off the hob using the main switch.
- Do not wait until the hob turns off automatically as there are no longer any pots and pans on it.

Fatty deposits in the grease filters may catch fire.
- Never operate the appliance without a grease filter.
- Clean the grease filters regularly.
- Never work with naked flames close to the appliance (e.g. flambéing).
- Do not install the appliance near a solid fuel heating appliance (e.g. wood- or coal-burning) unless the heating appliance has a sealed, non-removable cover. There must be no flying sparks.

⚠ WARNING – Risk of burns!

The appliance and its parts that can be touched become hot during use, particularly the hob surround, if fitted.
- Caution should be exercised here in order to avoid touching heating elements.
- Young children under 8 years of age must be kept away from the appliance.

Hob guards may cause accidents.
- Never use hob guards.

Metal objects on the hob quickly become very hot.
- Never place metal objects (such as knives, forks, spoons and lids) on the hob.

The appliance becomes hot during operation.
- Allow the appliance to cool down before cleaning.
- If hot liquids penetrate the appliance, only remove the grease filter or the overflow container once the appliance has cooled down.

⚠ WARNING – Risk of electric shock!

Improper repairs are dangerous.
- Repairs to the appliance should only be carried out by trained specialist staff.
- Only use genuine spare parts when repairing the appliance.
- If the power cord or the appliance power cable of this appliance is damaged, it must be replaced with a special power cord or special appliance power cable, which is available from the manufacturer or its Customer Service.
- If the power cord of this appliance is damaged, it must be replaced by trained specialist staff.

If the appliance or the power cord is damaged, this is dangerous.
- Never operate a damaged appliance.
- Never operate an appliance with a cracked or fractured surface.
- Never pull on the power cord to unplug the appliance. Always unplug the appliance at the mains.
- If the appliance or the power cable is damaged, immediately switch off the fuse in the fuse box.
- Call customer service. →*Page 22*

An ingress of moisture can cause an electric shock.
- Do not use steam- or high-pressure cleaners to clean the appliance.

The insulation on cables of electrical appliances may melt if it touches hot parts of the appliance.
- Never bring electrical appliance cables into contact with hot parts of the appliance.

⚠ WARNING – Risk of injury!

Saucepans may suddenly jump due to liquid between the saucepan base and the hotplate.
- Always keep hotplates and saucepan bases dry.
- Never use icy-cold cookware that has been in the freezer.

When cooking in a bain marie, the hob and cooking container could shatter due to overheating.
- The cooking container in the bain marie must not directly touch the bottom of the water-filled pot.
- Only use heat-resistant cookware.

An appliance with a cracked or broken surface can cause cuts.
- Do not use the appliance if it has a cracked or broken surface.

2 Avoiding material damage

This is where you can find the most common causes of damage and tips on how to avoid them.

Damage	Cause	Measure
Stains	Unsupervised cooking process.	Monitor the cooking process.

Damage	Cause	Measure
Stains, blisters	Spilled food, especially food with a high sugar content.	Remove immediately with a glass scraper.
Stains, blisters or fractures in the glass	Defective cookware, cookware with melted enamel or cookware with copper or aluminium base.	Use suitable cookware that is in a good condition.
Stains, discolouration	Unsuitable cleaning methods.	Only use cleaning agents that are suitable for glass ceramic, and only clean the hob when it is cold.
Blisters or fractures in the glass	Knocks or falling cookware, cooking accessories or other hard or pointed objects.	When cooking, do not hit the glass or let objects fall onto the hob.
Scratches, discolouration	Rough cookware bases or moving the cookware on the hob.	Check the cookware. Lift the cookware when moving it.
Scratches	Salt, sugar or sand.	Do not use the hob as a work surface or storage space.
Damage to the appliance	Cooking with frozen cookware.	Never use frozen cookware.
Damage to the cookware or the appliance	Cooking without contents.	Never place or heat empty cookware on a hot cooking zone.
Glass damage	Melted material on the hot cooking zone or hot pot lid on the glass.	Do not place greaseproof paper or aluminium foil nor plastic containers or pot lids on the hob.
Overheating	Hot cookware on the control panel or on the frame.	Never place hot cookware on these areas.

3 Environmental protection and saving energy

3.1 Disposing of packaging

The packaging materials are environmentally compatible and can be recycled.

- Sort the individual components by type and dispose of them separately.

3.2 Saving energy

If you follow these instructions, your appliance will use less energy.

Select the cooking zone to match the size of your pan. Centre the cookware on the hob.

Use cookware whose base diameter is the same diameter as the hotplate.
Tip: Cookware manufacturers often give the upper diameter of the saucepan. It is often larger than the base diameter.
✔ Unsuitable cookware or incompletely covered cooking zones consume a lot of energy.

Cover saucepans with suitable lids.
✔ Cooking without a lid consumes considerably more energy.

Lift lids as infrequently as possible.
✔ When you lift the lid, a lot of energy escapes.

Using a glass lid
✔ You can see into the pan through a glass lid without having to lift it.

Use pots and pans with flat bases.
✔ Uneven bases increase energy consumption.

Use cookware that is suitable for the quantity of food.
✔ Large items of cookware containing little food need more energy to heat up.

Cook with only a little water.
✔ The more water there is in the cookware, the more energy that is required to heat it up.

Turn down to a lower power level early on. Use a suitable ongoing power level.
✔ If you use an ongoing power level that is too high, you will waste energy.

Adjust the fan speed to the amount of steam produced during cooking.
✔ The lower the fan speed, the less energy is consumed.

If cooking produces large amounts of steam, select a higher fan speed in good time.
✔ The odours are distributed around the room less.

Switch the appliance off when you are not using it.

Ensure that there is sufficient ventilation when cooking.
✔ The appliance works more efficiently and with fewer operating noises.

Clean or replace the filters at regular intervals.
✔ The effectiveness of the filter is retained.

4 Suitable cookware

Cookware that is suitable for induction cooking must have a ferromagnetic base, i.e. it must be attracted by a magnet. The base must also match the size of the cooking zone. If cookware is not detected on a cooking zone, place this on the cooking zone with the next smallest diameter.

4.1 Size and characteristics of the cookware

To be able correctly detect the cookware, you must take the size and the material of the cookware into consideration.
All cookware bases must be perfectly flat and smooth.
Use Cookware test to check whether the cookware is suitable.
→ *"Cookware test", Page 16*

Cookware	Materials	Properties
Recommended cookware 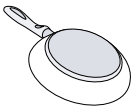	Stainless steel cookware in a sandwich design that distributes the heat well.	This cookware distributes the heat evenly, heats up quickly, and ensures that it can be detected easily.
	Ferromagnetic cookware made of enamelled steel, cast iron or special induction cookware made of stainless steel.	This cookware distributes the heat evenly, heats up quickly, and ensures that it can be detected.
Suitable 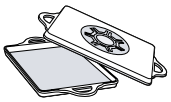 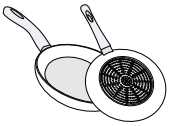	The base is not fully ferromagnetic.	If the ferromagnetic area is smaller than the base of the cookware, only the area that is ferromagnetic heats up. As a result, the heat is not distributed evenly.
	Cookware bases that contain aluminium.	These cookware bases reduce the ferromagnetic area, which means that less power is emitted to the cookware. This cookware may not be sufficiently detected or may not be detected at all, and therefore does not heat sufficiently.
Not suitable	Cookware made from normal thin steel, glass, clay, copper or aluminium.	

Notes
- Do not use adapter plates between the hob and the cookware.
- Do not heat up empty cookware and do not use cookware with a thin base, as this may become very hot.

5 Familiarising yourself with your appliance

5.1 Your new appliance

Information about your new appliance

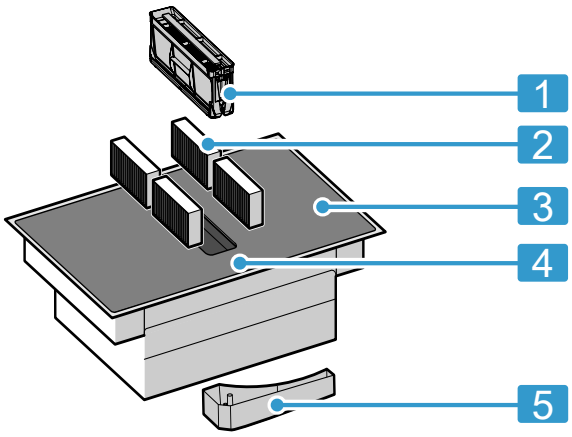

1	Grease filter

2	Odour filter for circulating-air mode or acoustics filter for air extraction mode [1]
3	Hob
4	Control panel
5	Overflow container

5.2 Special accessories

Depending on the appliance model, various accessories are available and you can obtain these from specialist retailers, from our after-sales service or from our official website.

- Air extraction set
- Air recirculation set
- Odour filter for recirculating air mode
- Acoustics filter for air extraction mode

5.3 Control panel

Individual details, such as colour and shape, may differ from the figure.

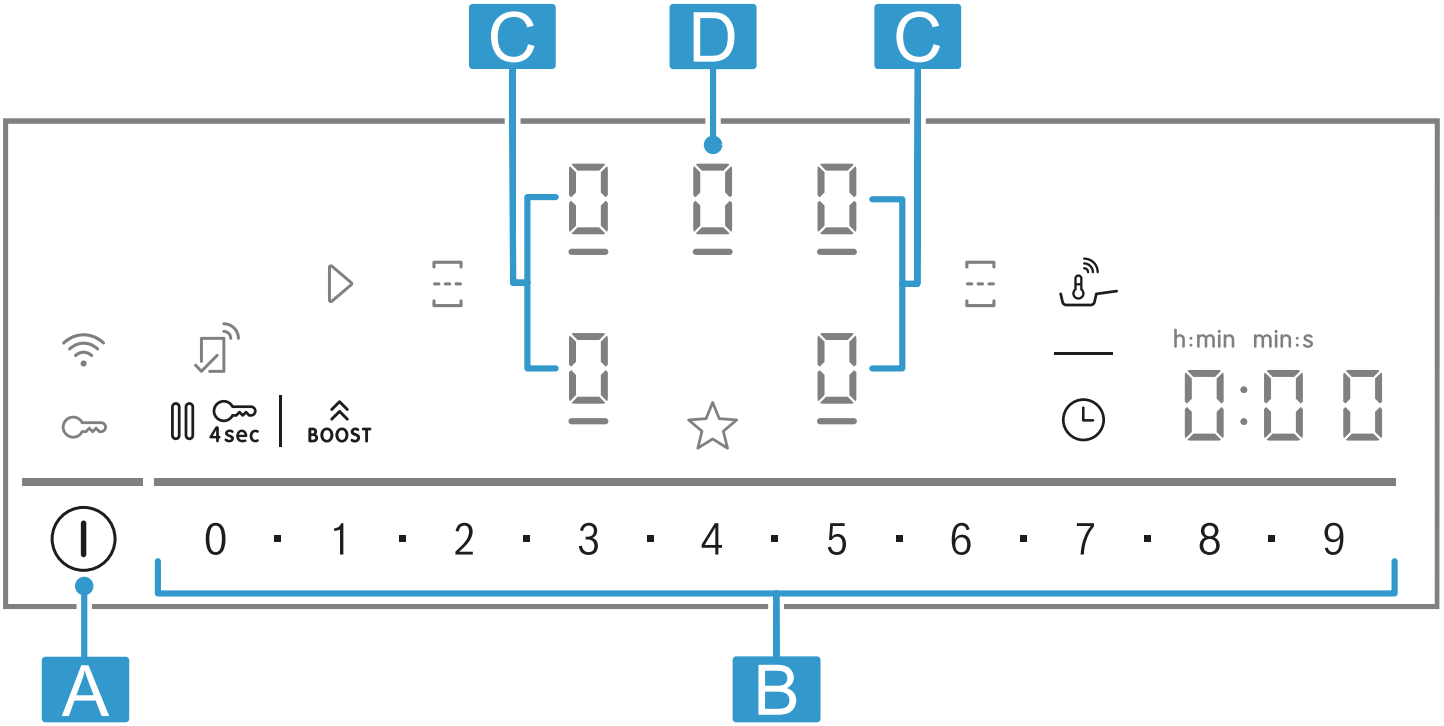

Letters	Designation
A	Main switch
B	Control panel
C	Cooking zone
D	Ventilation sensor

Note: Always keep the control panel clean and dry.

Tip: Do not place any cookware near the displays or buttons. The electronics may overheat.

Touch fields

When you switch on the hob, the symbols for the controls available at this time light up.

Sensor	Function
⏻	Main switch
	Select a cooking zone
0■1■2■...8■9	Settings area
BOOST	PowerBoost
	Automatic linking/separating of cooking zones

Sensor	Function
	PerfectFry Sensor
	Timer functions
4sec	Childproof lock
	Pause
☆	Favourite button
	Connectivity

Indicators/symbols

Display		Function
		Switch-off timer
		PerfectFry Sensor
	1-9	Power levels
		Childproof lock

Buttons in connection with Home Connect

As soon as the connection to Home Connect has been established, the following buttons and displays are available:

[1] Depending on the appliance specifications.

Sensor	Function
▷	Accept settings from another appliance

If ⚠ lights up, search for further information in the Home Connect app.

5.4 Distribution of the cooking zones

The specified power has been measured with the standard pots which are described in IEC/EN 60335-2-6. The power may vary depending on the size of the cookware or cookware material.

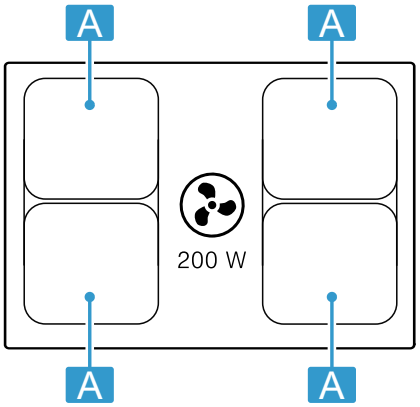

Area	Highest setting	
A 21 cm diameter	Power level 9 PowerBoost	2500 W 3700 W
A 21 x 38 cm	Power level 9	3600 W

At power level 9, the hob reaches the power indicated in the table in order to reduce the preheating times and keeps them running for a certain time, provided the other cooking zone on the same side is not in use.

5.5 Cooking zone

Before you start cooking, check whether the size of the cookware fits the cooking zone that you want to use for cooking:

Area	Cooking zone type
	Single-circuit cooking zone
	Combi cooking zone → *Page 11*

5.6 Residual heat indicator

The hob has a residual heat indicator for each cooking zone. Do not touch the cooking zone if the residual heat indicator is lit.

Display	Meaning
H	The cooking zone is hot.
h	The cooking zone is warm.

5.7 Saturation indicator

The hob is equipped with a saturation indicator. When the anti-odour filters are saturated, F lights up and the filter must be replaced.
→ *"Odour filter or acoustics filter", Page 19*

6 Software update

If the appliance is connected to Home Connect, some functions may be available with a software update.

More information on the availability of additional functions can be found on the website *www.bosch-home.com*

7 Operating modes

You can use your appliance in air extraction mode or circulating-air mode.

7.1 Air extraction mode

The air which is drawn in is cleaned by the grease filters and conveyed to the exterior by a pipe system.

The air must not be discharged into a flue that is used for exhausting fumes from appliances burning gas or other fuels (not applicable to appliances that only discharge the air back into the room).

- If the exhaust air is to be conveyed into a non-functioning smoke or exhaust gas flue, you must obtain the consent of the heating engineer responsible.
- If the exhaust air is conveyed through the external wall, a telescopic duct should be used.

7.2 Air recirculation

The air which is drawn in is cleaned by the grease filters and an odour filter, and conveyed back into the room.

To bind odours in air recirculation mode, you must install an odour filter. The different options for operating the appliance in air circulation mode can be found in our catalogue. Alternatively, ask your dealer. The required accessories are available from specialist retailers, from our after-sales service or from the online shop.

Note: When cooking intensively and for a long time, moisture is released into the air in the room. When using the appliance in air recirculation mode, we recommend ventilating the kitchen adequately, e.g. by briefly opening a window to remove excessive moisture.

8 Before using for the first time

Observe the following recommendations.

8.1 Initial cleaning

Remove any leftover packaging from the hob surface and wipe the surface with a damp cloth. You can find a list of recommended detergents on the official website *www.bosch-home.com*.
More information on care and cleaning. →*Page 18*

8.2 Preparing the appliance

To ensure correct operation, you must arrange the components in this order:

1. Insert the filter.
2. Insert the metal grease filter.

Note: Never operate the appliance without the metal grease filter and the overflow container.

8.3 Cooking with induction

In comparison to conventional hobs, induction technology brings with it a series of changes and has a number of benefits such as time savings when cooking and frying, energy savings as well as greater ease of cleaning and care. It also offers improved heat control as the heat is generated directly in the cookware.

8.4 Cookware

You can find a list of recommended cookware on the official website *www.bosch-home.com*.
Further information on suitable cookware. →*Page 6*

8.5 Setting the operating mode

The appliance is supplied with a preset circulating-air mode.
When your hob is installed with an air outlet to the outside, you must configure the setting c17 to this mode.
You can find additional information about this in the section entitled
→ *"Basic settings", Page 14*

8.6 Setting Home Connect

When you first switch on the appliance, you will be prompted to set your home network. lights up for a few seconds on the display panel.
To begin the connection to Home Connect, touch and proceed in accordance with the information in the section .
To end the setting, switch off the hob.
You can also adjust the Home Connect setting at a different time.

9 Basic operation

9.1 Switching on the hob

- Touch ⏻.
  A signal sounds. The symbols for the cooking zones and the currently available functions light up. 0 lights up in the cooking zone displays.
- ✔ The hob is ready to use.

ReStart

- If you switch the appliance on within four seconds of switching it off, the hob operates with the settings that were previously set.

9.2 Switching the hob off

- Touch ⏻ until the displays go out.
- ✔ All cooking zones are switched off.

Note: If all of the cooking zones are switched off for longer than 59 seconds, the hob is automatically switched off.

9.3 Setting the power level in the cooking zones

The cooking zone has 17 power levels, which are displayed from 1 to 9 with intermediate values. Select the best power level for the food and the planned cooking process.

1. Touch the required cooking zone display 0
- ✔ 0 and 0 light up.
2. Select the required power level in the settings area.
- ✔ The power level has been set.

Note: If no cookware is placed on the cooking zone or the pot is not suitable, the selected power level flashes. After a certain period of time, the cooking zone switches itself off.

QuickStart

- If you set one or more items of cookware on any cooking zone before switching on the appliance, the hob detects this and automatically selects the cooking zone for one of the items of cookware. Then select the power level in the next 59 seconds, or the hob will switch off.

Changing the power level and switching off the cooking zone

1. Select the cooking zone.
2. Select the required power level or set it to 0
- ✔ The cooking zone's power level is changed or the cooking zone is switched off.

9.4 Cooking recommendations

The table shows which power level (_=≡) is suitable for which food. The cooking time (◷ min) may vary depending on the type, weight, thickness and quality of the food. To preheat, set power level 8–9.

		min
Melting		
Butter, honey, gelatine	1 - 2	-
Heating and keeping warm		
Boiled sausages [1]	3 - 4	-
Defrosting and heating		
Spinach, frozen	3 - 4	15 - 25
Poaching, simmering		
Potato dumplings [1]	4. - 5.	20 - 30
Whisked sauces, e.g. Béarnaise sauce, Hollandaise sauce	3 - 4	8 - 12
Boiling, steaming, braising		
Rice, with double the volume of water	2. - 3.	15 - 30
Unpeeledboiled pots	4. - 5.	25 - 35
Pasta [1]	6 - 7	6 - 10
Soups	3. - 4.	15 - 60
Vegetables	2. - 3.	10 - 20
Stew in a pressure cooker	4. - 5.	-
Stewing		
Pot roast	4 - 5	60 - 100
Goulash [2]	3 - 4	50 - 60

		min
Braising/frying with a small amount of fat [1]		
Escalope, plain or breaded	6 - 7	6 - 10
Steak (3 cm thick)	7 - 8	8 - 12
Poultry breast (2 cm thick)	5 - 6	10 - 20
Hamburgers (2 cm thick)	6 - 7	10 - 20
Fish and fish fillet, breaded	6 - 7	8 - 20
Prawns and scampi	7 - 8	4 - 10
Sautéing fresh vegetables and mushrooms	7 - 8	10 - 20
Frozen dishes, e.g. stir-fries	6 - 7	6 - 10
Omelette (cooked one after the other)	3. - 4.	3 - 10
Deep-frying, 150–200 g per portion in 1–2 l oil, deep-fat fried in portions [1]		
Frozen products, e.g. chips, chicken nuggets	8 - 9	-
Vegetables, mushrooms, breaded, beer-battered or tempura	6 - 7	-
Small baked items, e.g. doughnuts, battered fruit	4 - 5	-

10 Ventilation control

The cooking zone has an air extraction system integrated in the cooking surface.
The functions for controlling the air extraction system are described below.
You can change the factory settings at any time.
→ *"Basic settings", Page 14*

Note: Use shallow cookware to improve performance. With deep cookware, place the lid at an angle.

10.1 Automatic start for the ventilation system

If you assign a power level to the first cooking zone, the air extraction system will start up automatically. The ventilation setting lights up on the ventilation sensor. After the automatic start, you can change the ventilation setting. Changing or deactivating the ventilation setting.
→*Page 10*

10.2 Ventilation control

The board has 9 ventilation settings.

Switching on the ventilation system

1. Press the ventilation sensor.
✔ The ventilation system starts at the preset power level.
2. Select the required power level in the settings area.
✔ The power level for the ventilation system lights up.

Changing or switching off the ventilation system

1. Press the ventilation sensor.
2. Select the required ventilation setting or change it to 0.

10.3 Intensive ventilation settings

There are two intensive ventilation settings at which the ventilation system operates for a short time at a higher power level.

Switching on the intensive settings

1. Press the ventilation sensor.
2. Select the required intensive setting:
   - **Intensive setting I**: Press BOOST. b lights up.
   - **Intensive setting II**: Press BOOST twice. b.5 lights up.

Note: After approx. 8 minutes, the appliance automatically switches back to ventilation setting 9.

Changing or switching off intensive settings

1. Press the ventilation sensor.
2. Select the required ventilation setting or change it to 0.

[1] Without lid
[2] Preheat to power level 8 - 8.5

10.4 Fan run-on for the ventilation system

The ventilation system continues to run for a few minutes after the cooking zone is switched off using the main switch.
This assumes that the cooking zone has been switched on for at least one minute and the ventilation system is running.

Once the corresponding time has elapsed, the ventilation system switches off automatically. This time depends on the operating mode in which the appliance is installed.
When the ventilation system is switched on, the ventilation setting lights up. The ventilation system can be switched off at any time by pressing the ventilation sensor.

11 Favourite button

You can use the function to select two functions or cooking settings which can then be quickly accessed on ☆.

11.1 Assigning Favourite button functions

Requirement: Connect the appliance to Home Connect. You can find more information about this under Home Connect

1. To assign ☆ functions, open the Home Connect app and follow the instructions.
2. As soon as you have assigned the functions, you can use them:

✔ Function 1: Press ☆ briefly.
✔ Function 2: Press and hold ☆.

Note: If you have not assigned any functions, ☆ switches off once the hob is switched on.

12 CombiZone

It allows two cooking zones of the same size to be combined, with the same power level being switched on in both. This is intended in particular for cooking with long cookware.
This function allows you to cook with one item of cookware that occupies one cooking zone and that can be moved from one zone to another for increased convenience. In this case, the two zones also retain the same power level and the same settings.

12.1 Positioning the cookware

Use cookware that fits into the cooking zones.

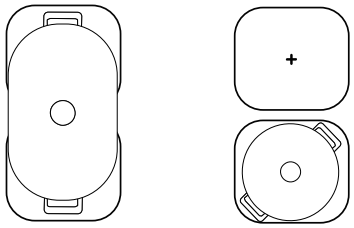

12.2 Switching on CombiZone

1. Select one of the two cooking zones and set the power level.
2. Press ⊟.

✔ The function is activated.

12.3 Switching off CombiZone

▸ Touch ⊟.

✔ The function is switched off.
✔ The two cooking zones once again operate independently of one another.

13 Time-setting options

Your hob has various functions for setting the cooking time:

- Switch-off timer
- Timer

The ◷ button is assigned to the Switch-off timer function by default. However, you can also assign one of the above-mentioned functions to the sensor.You can change these settings via the Home Connect app or in the basic settings →*Page 14*.

13.1 Switch-off timer

Allows you to programme a cooking time for one or more cooking zones and their automatic switch-off once the time set has elapsed.

Switching on Switch-off timer

1. Select the cooking zone and the required power level.
2. Touch ◷.

✔ |→| and 0:00 light up.

3. Within the next 10 seconds, set the required cooking time in the settings area.
   - You can set intermediate values between 1 minute and 9 minutes in increments of 30 seconds. To do this, use ▪ to select the intermediate values.
   - To select a time in hours, e.g. 1 h 30 mins, press the numerical sequence 1 - 3 - 0 in the settings area. If you select a time of more than 60 minutes, the time is automatically displayed in hours.
4. Touch ◷ to confirm.

✔ The cooking time begins to elapse. An audible signal sounds 1 minute before the selected time elapses. You can check the status of the food and, if required, extend the cooking time.
✔ Once the cooking time has elapsed, the cooking zone is switched off and a signal sounds.

Notes

- If a cooking time has been programmed in a cooking zone in which the PerfectFry Sensor is activated, the programmed cooking time will start to count down as soon as the selected temperature level has been reached.
- To switch the display between the operating temperature PerfectFry Sensor and the programmed cooking time, press the selected temperature.

Changing or switching off Switch-off timer

1. Select the cooking zone and then touch ◷.
2. To switch off the function, change the cooking time or set it to 0:00.

13.2 Timer

Enables a clock to be activated. This function operates independently of the cooking zones and other settings. It does not automatically switch off the cooking zones.

Switching on Timer

Requirement: Assign the function to ◷.

1. Press ◷.
2. Select the required time.

✔ The time starts to elapse.
✔ A signal tone sounds and the displays flash once the time has elapsed.

Changing or switching off the Timer

1. Press ◷.
2. To switch off the function, change the cooking time or set it to 0:00.

14 PowerBoost

The PowerBoost function enables you to heat up large quantities of water faster than when using 9.
This function is available for all cooking zones, provided the other cooking zone on the same side is not in use. Otherwise, b and 9 flash on the display for the selected cooking zone. 9 is then set automatically without activating the function.

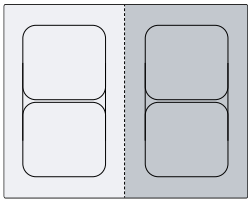

14.1 Switching on PowerBoost

1. Select the cooking zone.
2. Touch BOOST

✔ The b display lights up.
✔ The function is activated.

14.2 Switching off PowerBoost

1. Select the cooking zone.
2. Touch BOOST.

✔ The b display goes out and the cooking zone switches back to power level 9
✔ The function is switched off.

Note: In certain circumstances, the appliance switches this function off to protect the electronic elements inside the hob.

15 PanBoost

You can use this function to heat up pans more quickly than with 9. Do not use the PowerBoost function with frying pans – this may damage the coating.
You can activate the function via Home Connect or Favourite button.
This function is available for all cooking zones, provided the other cooking zone on the same side is not in use.

Otherwise, P and 9 flash on the display for the selected cooking zone. 9 then switches on automatically.

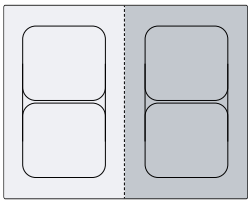

15.1 Recommended applications

- Do not place a lid on the pan.

- Never leave pans unattended when they are heating up.
- Only use cold pans.
- Use pans with a completely flat base. Do not use pans with a thin base.

15.2 Switching on PanBoost

Requirement: Assign the function to ☆. .

→ *"Favourite button", Page 11*

1. Select the cooking zone.
2. Touch ☆.
✔ P lights up.
✔ The function is activated.

15.3 Switching off PanBoost

1. Select the cooking zone.
2. Select the power level.
✔ P goes out
✔ The function is switched off.

Note: To avoid high temperatures, this function automatically switches itself off after 30 seconds.

16 Keep-warm function

You can use this function to melt chocolate or butter, and to keep meals warm.
You can activate the function via Home Connect or Favourite button.

16.1 Switching on Keep-warm function

Requirement: Assign the function to ☆. .

→ *"Favourite button", Page 11*

1. Select the required cooking zone.
2. Touch ☆.
L lights up.
✔ The function is switched on.

16.2 Switching off Keep-warm function

1. Select the cooking zone.
2. Set to 0
L goes out.
✔ The function is switched off.

17 PerfectFry Sensor

This function allows you to melt, prepare sauces, sauté, deep fry or fry while keeping the temperature under control.
Instead of constantly adjusting the power level during cooking, select the required target temperature once at the start. The sensors under the glass ceramic measure the temperature of the cookware and keep this constant throughout the entire cooking process.
This function is available on all cooking zones marked with this symbol ☞.

Functions	Temperature
Melting	70 - 80 °C
Preparing sauces	110 - 120 °C
Frying	140 °C
Frying	160 °C
Frying	180 - 200 °C
Frying	220 °C

17.1 Recommended cookware

Special cookware has been developed for this function, which delivers the best results.
The recommended cookware is available from customer service, specialist retailers or our online shop *www.bosch-home.com*.

Note: You can also use other cookware. Depending on the composition of the cookware, the achieved temperature may differ from the selected temperature level.

17.2 Switching on the PerfectFry Sensor

1. Place the empty cookware on a cooking zone.
2. Select the cooking zone.
3. Press ☞.
✔ 🌡, t and the preset temperature light up on the display for the selected cooking zone.
4. Select the temperature by swiping your finger over the settings area.
✔ 🌡 flashes until the set temperature is reached again.
✔ The selected temperature and the development of the temperature reached in the pan flash alternately until the selected temperature has been reached.
✔ The temperature shown on the displays is approximate and may differ from the actual temperature in the frying pan.
✔ Once the temperature has been reached, a signal tone sounds and 🌡 as well as the temperature symbol stop flashing.
5. Add the frying fat and then the food to the frying pan.

Note: If you need to cook with more than 250 ml oil, add the oil and wait a few seconds before you add the food.

17.3 Switching off PerfectFry Sensor

▸ Select the cooking zone and touch ☞.

17.4 Recommendations for cooking with PerfectFry Sensor

The enclosed documentation contains a table with recommendations for cooking with PerfectFry Sensor.

18 Childproof lock

The hob is equipped with a childproof lock. You can use this to prevent children from switching on the hob.

18.1 Switching on Childproof lock

Requirement: The hob must be switched off.
- ▸ Touch and hold for 4 seconds.
- ✔ lights up for 10 seconds.
- ✔ The hob is locked

18.2 Deactivating the childproof lock

1. To switch on the hob, touch ⏻.
2. Touch and hold for 4 seconds.
- ✔ The lock is released.

18.3 Automatic childproof lock

You can also activate the childproof lock automatically every time the hob is switched off.
You can find out how to switch the function on and off in the "Basic settings" section → *Page 14*.

19 Pause

You can use the function to pause and resume active cooking processes for up to 10 minutes without changing the settings you have selected.
You can switch the function on to clean the control panel, for example.

19.1 Activating the Pause function

- ▸ Press ⏸.
- ✔ ⏸ lights up in the cooking zone displays.
- ✔ All active cooking processes are stopped. The settings are retained.
- ✔ The function is activated.

19.2 Deactivating the Pause function

- ▸ Touch ⏸.
- ✔ The function is switched off. The cooking processes continue.

Note: After approximately 10 minutes, the cooking zone automatically switches off.

20 Individual safety switch-off

Activate the safety function if one cooking zone is in operation for an extended period and you do not change any settings. The cooking zone displays F8 and switches itself off.
The time depends on the selected power level.

Power level	Time
1.0 - 1.5	10 hours
2.0 - 3.5	5 hours
4.0 - 5.0	4 hours
5.5 - 6.5	3 hours
7.0 - 7.5	2 hours
8.0 - 9.0	1 hour

Press any button to switch on the cooking zone.

21 Basic settings

You can configure the basic settings for your appliance to meet your needs.

21.1 Overview of the basic settings

Display	Setting	Value
c1	Childproof lock → *"Childproof lock", Page 14*	0 - Manual.[1] 1 - Automatic. 2 - Function switched off.
c2	Audible signals	0 - The confirmation signal, the fault signal and the signal for incorrect use are deactivated. 1 - The fault signal is activated.

[1] Factory setting

Display	Setting	Value
		2 - The confirmation signal and the signal for incorrect use are activated. 3 - All signal tones are switched on [1].
c 3	Volume of the audible signals	1 - Quiet. 2 - Medium. [1] 3 – Loud.
c 6	Assign one of the time-setting programme functions to ◷ on the control panel. → *"Time-setting options", Page 11*	1 - Switch-off timer. [1] 2 - Timer.
c 7	Power limitation This enables you to limit the total power of the hob, if required, due to the circumstances of your electrical installation. Observe the regulations of the local electricity suppliers. The available settings depend on the maximum power of the hob. You can find more information on the rating plate. If the function is switched on and the hob has reached the set power limit, the required and permitted power level flashes and you cannot select a higher power level.	The power is increased by 500 W with each level. 0 – Switched off. Maximum power of the hob [1]. 1 - 1000 W. Lowest power setting. 1.5 - 1500 W. ... 3 - 3000 W. 3.5 - 3500 W. 4 - 4000 W. 4.5 - 4500 W. ... 9 - Maximum power of the hob.
c 8	Demo mode Demonstration mode for the hob: When you switch on the hob, dE lights up for a few seconds and the cooking zones do not heat up.	0 - Switched off. [1] 1 - Switched on.
c 12	Cookware test You can use this function to test the quality of the cookware. → *"Cookware test", Page 16*	0 - Not suitable. 1 - Not optimal. 2 - Suitable.
c 17	Set circulating-air mode or air extraction mode.	0 - Configure circulating-air mode. [1] 1 - Configure air extraction mode.
c 18	Set the automatic ventilation system start. The ventilation system starts at the preset performance level.	0 - Switched off. 1 - Switched on. [1]
c 20	Set the fan run-on for the ventilation system. If your hob is working in air extraction mode, the ventilation system is switched on at the power level for approx. 6 minutes. If your hob is working in circulating-air mode, the ventilation system is switched on at the power level for approx. 30 minutes.	0 - Switched off. 1 - Switched on. [1]:
c 0	Restoring factory settings	0 - Individual settings [1]. 1 - Factory settings.

21.2 To go to the basic settings

Requirement: The hob must be switched off.

1. To switch on the hob, touch ⏻.
2. Within the next 10 seconds, touch and hold ◷ for 4 seconds.

Product information	Display
Customer service directory	0 1 ,
Production number	Fd
Production number 1	02-
Production number 2	05

✔ The first four displays provide the product information. Touch ◷ to view the individual displays.

3. Touch ◷ to access the basic settings.

✔ c 1 and 0 light up as a presetting.

4. Touch ◷ repeatedly until the desired setting appears.
5. Select the required setting in the settings area.
6. Touch and hold ◷ for 4 seconds.

✔ This saves the settings.

[1] Factory setting

21.3 Discarding changes to the basic settings

- Touch ①.
- ✔ All changes are discarded and not saved.

22 Cookware test

The quality of the cookware has a major influence on the speed and the result of the cooking process.
You can use this function to test the quality of the cookware.
Before the test, ensure that the diameter of the cookware base corresponds to the diameter of the cooking zone being used.
Access is via the basic settings. →*Page 14*

22.1 Carrying out Cookware test

1. At room temperature, place the cookware with approx. 200 ml water in the centre of the cooking zone that best fits the base of the cookware in terms of size.
2. Call up the basic settings and select c 12.
3. Touch the settings area. u flashes in the cooking zones.

- ✔ The function is switched on.
- ✔ After 10 seconds, the result appears in the cooking zone displays.

22.2 Checking the result

You can see what the result means for the quality and speed of the cooking process in the following table.

Result	
0	The cookware is not suitable for the cooking zone and therefore does not heat up.
1	The cookware is taking longer to heat up than expected and cooking is not progressing as well as it ought to.
2	The cookware is heating up correctly and cooking is progressing well.

To reactivate this function, touch the settings area.

23 Home Connect

This appliance is network-capable. Connecting your appliance to a mobile device lets you control its functions via the Home Connect app, adjust its basic settings and monitor its operating status.
The Home Connect services are not available in every country. The availability of the Home Connect function depends on the availability of Home Connect services in your country. You can find information about this at: *www.home-connect.com*.
The Home Connect app guides you through the entire login process. Follow the instructions in the Home Connect app to configure the settings.

Tip: Please also follow the instructions in the Home Connect app.

Notes

- Please note the safety precautions in this instruction manual and make sure that they are also observed when operating the appliance via the Home Connect app.
  → *"Safety", Page 2*
- Operating the appliance on the appliance itself always takes priority. During this time it is not possible to operate the appliance using the Home Connect app.
- In networked standby mode, the appliance requires a maximum of 2 W.

23.1 Setting up Home Connect

Requirements

- The appliance is connected to the power supply and is switched on.
- You have a mobile device with a current version of the iOS or Android operating system, e.g. a smartphone.
- The appliance is receiving signals from the WLAN home network (Wi-Fi) at its installation location.
- The mobile device and the appliance are within range of your home network's Wi-Fi signal.

1. Scan the following QR code.

   You can install the Home Connect app and connect your appliance via the QR code.
2. Follow the instructions in the Home Connect app.

23.2 Wi-Fi symbol

The Wi-Fi indicator on the main screen changes according to the status and quality of the connection and the availability of the Home Connect server.

status	Description
Lights up steadily at half brightness.	No network connection saved.
Flashes at full brightness.	Network connection is being established.

status	Description
Lights up steadily at full brightness.	Network connection saved and Wi-Fi active.
Flashes.	Network settings are reset.
Switched off.	Network not active.

23.3 Adding or removing a Wi-Fi home network

The following overview shows how to add or remove a Wi-Fi home network.

Wi-Fi home network status	Action
No Wi-Fi home network stored.	To add the Wi-Fi home network, briefly press .
The Wi-Fi home network has now been saved.	To pair another appliance, press and hold .
The Wi-Fi home network has now been saved.	To reset the Wi-Fi home network settings, press and hold . If flashes, press and hold again.

23.4 Switching off the network connection

- Press and hold . If flashes, press and hold again.
- ✔ The connection to the Wi-Fi network is switched off and the network connections are disconnected.

Note: To switch the network connection back on, see .
→ *"Adding or removing a Wi-Fi home network", Page 17*

23.5 Changing settings via the Home Connect app

You can use the Home Connect app to change the settings for the cooking zones and send them to the hob.

Requirement: The hob is connected to the Wi-Fi and to the Home Connect app.

1. Select the setting in the Home Connect app and send it to the hob.
   Follow the instructions in the Home Connect app.
   Settings that you send from the Home Connect app to the hob must be confirmed on the hob.
   - ✔ As soon as cooking settings are transmitted to a cooking zone, the display starts to flash, depending on the setting.
2. Press ▷ to confirm the setting.
3. To discard the setting, press any other touch field on the hob.

23.6 Activating Bluetooth® detection

This wireless technology enables automatic presence detection. Provided you are near the hob, you no longer need to confirm settings from your mobile device on the hob. If you send settings to a cooking zone, you can confirm these directly from your mobile device.

Requirements

- The hob is connected to the Wi-Fi and to the Home Connect app.
- The Bluetooth® system is connected to the mobile device.
- The user is near the hob.

1. Open the Home Connect app.
2. In order to set Bluetooth® detection, follow the instructions in the Home Connect app.

Note: The Bluetooth® connection is deactivated if the hob is disconnected and switches to energy-saving mode. The Bluetooth® connection can also be deactivated via the Home Connect app.

23.7 Software update

Your appliance's software can be updated using the software update function, e.g. for the purposes of optimisation, troubleshooting or security updates.
To do this, you must be a registered Home Connect user, have installed the app on your mobile device and be connected to the Home Connect server.
As soon as a software update is available, you will be informed via the Home Connect app and will be able to start the software update via the app. Once the update has been successfully downloaded, you can start installing it via the Home Connect app if you are in your home network (Wi-Fi). The Home Connect app informs you once installation is successful.

Notes

- The software update consists of two steps.
  - The first step is the download.
  - The second step is the installation on your appliance.
- You can continue to use your appliance as normal while updates are downloading. Depending on your personal settings in the app, software updates can also be set to download automatically.
- Installation takes a few minutes. You cannot use your appliance during installation.
- We recommend that you install security updates as soon as possible.

23.8 Remote diagnostics

Customer Service can use Remote Diagnostics to access your appliance if you contact them, have your appliance connected to the Home Connect server and if Remote Diagnostics is available in the country in which you are using the appliance.

Tip: For further information and details about the availability of Remote Diagnostics in your country, please visit the service/support section of your local website: *www.home-connect.com*.

23.9 Data protection

Please see the information on data protection.

The first time your appliance is registered on a home network connected to the Internet, your appliance will transmit the following types of data to the Home Connect server (initial registration):

- Unique appliance identification (consisting of appliance codes as well as the MAC address of the installed Wi-Fi communication module).
- Security certificate of the Wi-Fi communication module (to ensure a secure data connection).

- The current software and hardware version of your appliance.
- Status of any previous resetting to factory settings.

This initial registration prepares the Home Connect functions for use and is only required when you want to use the Home Connect functions for the first time.

Note: Please note that the Home Connect functions can only be utilised with the Home Connect app. Information on data protection can be retrieved in the Home Connect app.

24 Cleaning and servicing

To keep your appliance working efficiently for a long time, it is important to clean and maintain it carefully.

24.1 Hob surface

Preventing damage to the surface

Before you use the appliance for the first time, clean the surface with a soft cloth and a commercially available glass ceramic cleaner.

- Do not use the hob as a work surface or storage space.
- Prevent food from coming into contact with the hotplate since this may lead to permanent discolouration of the surface.
- Carefully remove any food residue, sugar, plastic, aluminium foil and spilled food immediately with a glass scraper.
- Immediately remove the coarse dirt, salt and sugar from the cooking surface.
- Do not use cookware with a rough base.
- Lift the cookware when moving it.
- Do not use a scraper that is in poor condition.

24.2 Cleaning products

You can obtain suitable cleaning products and glass scrapers from customer service, the online shop or a retailer.

ATTENTION
Unsuitable cleaning products may damage the surfaces of the appliance.
- Never use unsuitable cleaning products.
- Do not use cleaning products while the hob is still hot. This may cause marks on the surface.

Unsuitable cleaning products

- Undiluted detergent
- Detergent intended for dishwashers
- Abrasive cleaning products
- Aggressive cleaning products such as oven spray or stain remover
- Abrasive sponges
- High-pressure or steam jet cleaners
- Basic products such as degreasing agents

24.3 Cleaning the hob

Clean the hob after every use to prevent cooking residues from getting burnt on.

Requirement: The hob must be cold. Do not allow the hob to cool down if it has sugar stains, rice starch, plastic or aluminium foil on it.

1. Remove heavy soiling using a glass scraper.
2. Spray the entire surface with soapy water or commercially available detergent. Only use cleaning agents for glass ceramic cooktops if there is stubborn dirt.
   - Apply the cleaning agent evenly and gently.
   - Follow the cleaning instructions on the packaging of the cleaning product.
   - You can achieve good cleaning results using a special sponge for glass ceramic.
3. Wipe it with a damp cloth and dry it with a cloth.

Tip: If you keep the base of the cookware clean, the hob surface remains in a good condition.

24.4 Cleaning profiles

Clean the profiles if they are dirty or stained after use.

Note: Do not use a glass scraper.

1. Clean using warm soapy water and a soft cloth. Wash new sponge cloths thoroughly before use.
2. Dry with a soft cloth.

24.5 Grease filter

The grease filter filters the grease out of the kitchen steam. The filter comprises a container and two removable grease filters. How frequently you clean the module depends on the quantity and type of grease used when cooking. To keep them in good working order, you must clean the grease filters if there are visible grease deposits or at least once a month.

⚠ **WARNING – Risk of fire!**
Fatty deposits in the grease filters may catch fire.
- Never operate the appliance without a grease filter.
- Clean the grease filters regularly.
- Never work with naked flames close to the appliance (e.g. flambéing).

ATTENTION
Falling grease filters may damage the hob below.
- Grip below the grease filter with one hand.

1. Remove the grease filter.
   - Grease may accumulate in the bottom of the container. Keep the grease filter level to prevent grease from dripping out.

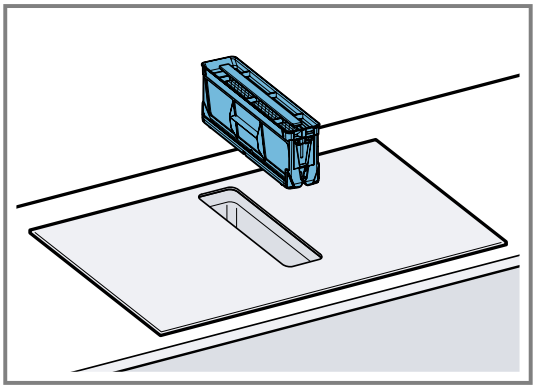

2. Remove the components of the grease filter.

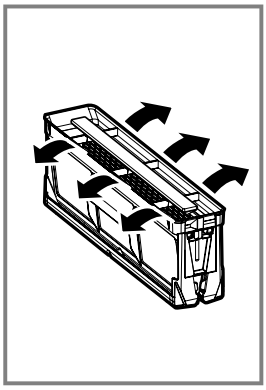

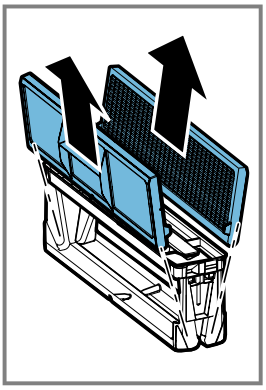

3. Clean the grease filter in the dishwasher or by hand.
   → *"Cleaning the grease filters manually", Page 19*
   → *"Cleaning the grease filter in the dishwasher", Page 19*
4. If required, remove the odour filters or acoustics filters and clean the appliance from the inside.
5. If any objects get into the appliance, remove these objects and ensure that the supply to the overflow container is not blocked.
6. Wipe out the inside of the appliance with soapy water and a dish cloth.
7. After cleaning, reinsert the dried grease filter.

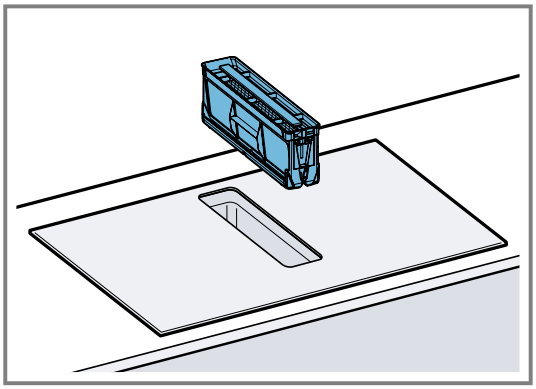

Cleaning the grease filters manually

1. Remove the components of the grease filter.
2. Soak the grease filter in hot soapy water.
   - Use a brush to clean the grease filter. Do not use aggressive, acidic or alkaline cleaning products.
   - Use special grease solvent for stubborn dirt. You can purchase the grease solvent from Customer Service, through our online shop or in a specialist shop.
3. Rinse the grease filters thoroughly.
4. Leave the grease filter to drain.
5. Fit the components of the grease filter.
6. After drying, insert the grease filter into the appliance.

Cleaning the grease filter in the dishwasher

1. Remove the grease filter.
2. Remove the components of the grease filter.
3. Place the components of the grease filter loosely in the dishwasher and do not jam them in.

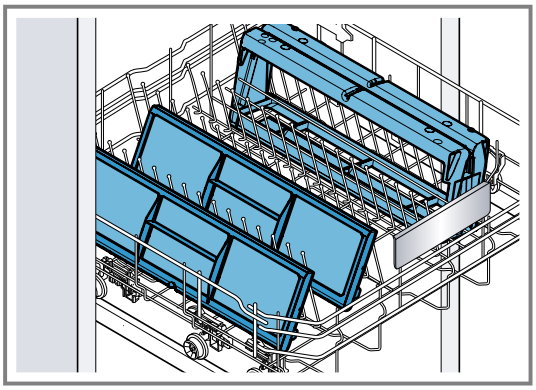

   Do not clean heavily soiled grease filters with tableware. Do not use aggressive, acidic or alkaline cleaning products.
4. Start the dishwasher. Select a maximum temperature setting of 70 °C.
5. Leave the grease filter to drain.
6. After drying, insert the grease filter into the appliance.

24.6 Odour filter or acoustics filter

You can obtain odour filters or acoustics filters from specialist retailers, customer service or in the online shop.

Notes

- Replace the odour filters when the warning is displayed on the appliance.
  → *"Resetting the saturation indicator", Page 20*
- Change the acoustics filters if they are dirty.

Requirement: To keep them in good working order, only use genuine replacement filters.

1. Remove the grease filter.
2. Remove the four odour filters or acoustics filters, and dispose of them properly.

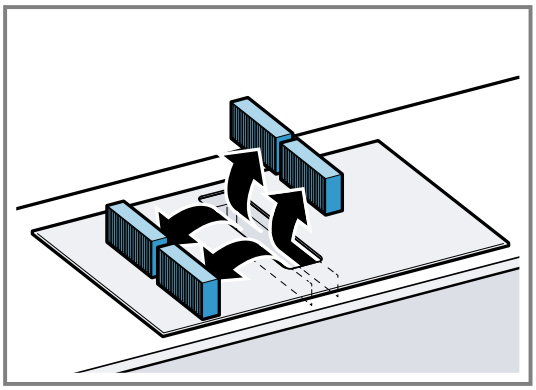

3. Insert two new odour filters or acoustics filters into the left and right of the appliance and slide them forwards.

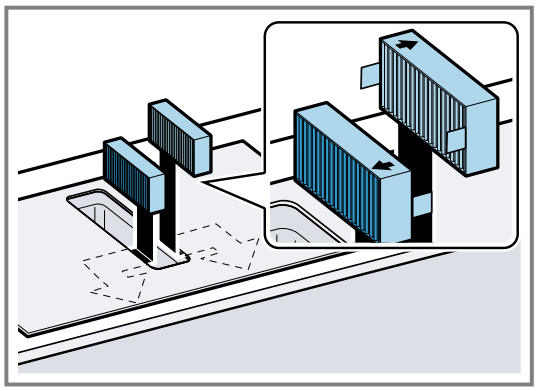

4. Insert the other odour filters or acoustics filters into the left and right of the appliance.

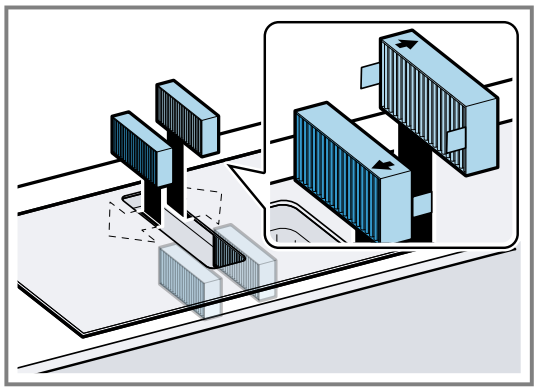

5. Insert the grease filter into the appliance.

Resetting the saturation indicator

After the appliance is switched off, *F* lights up.

1. Replace the odour filters.
   → *"Odour filter or acoustics filter", Page 19*
2. Press and hold the ventilation sensor until a signal tone sounds.
   ✔ *F* stops lighting up. The odour filter display is reset.

24.7 Cleaning the overflow container

The overflow container collects liquids or objects that come into the appliance from above.

Requirement: The appliance has cooled and the residual heat indicator has gone out.

1. Hold the overflow container with one hand and unscrew it with the other hand.
   - Hold the overflow container level to prevent liquid from leaking out.

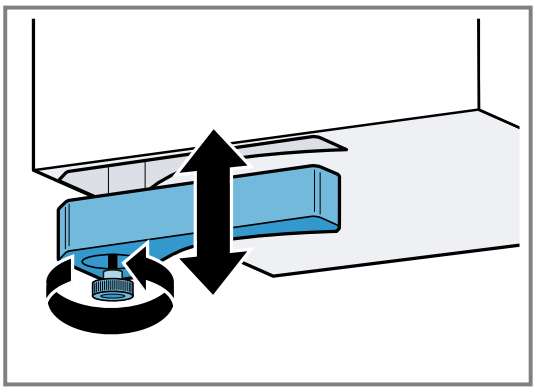

2. Empty the overflow container and rinse it out.
3. If required, unscrew the screw and clean the overflow container without the screw in the dishwasher.
4. Clean the overflow container before screwing it back into place.
5. Ensure that the supply to the overflow container is not blocked.
   Remove any objects that have entered the appliance once it has cooled down. To do this, remove the grease filter.

25 Troubleshooting

You can rectify minor faults on your appliance yourself. Read the troubleshooting information before contacting aftersales service. This will avoid unnecessary costs.

⚠ **WARNING – Risk of injury!**
Improper repairs are dangerous.
- Repairs to the appliance should only be carried out by trained specialist staff.
- If the appliance is defective, call Customer Service.
  → *"Customer Service", Page 22*

⚠ **WARNING – Risk of electric shock!**
Improper repairs are dangerous.
- Repairs to the appliance should only be carried out by trained specialist staff.
- Only use genuine spare parts when repairing the appliance.
- If the power cord or the appliance power cable of this appliance is damaged, it must be replaced with a special power cord or special appliance power cable, which is available from the manufacturer or its Customer Service.
- If the power cord of this appliance is damaged, it must be replaced by trained specialist staff.

25.1 Warnings

Notes

- If E or F appears in the displays, press and hold the sensor for the respective cooking zone and read the fault code.
- If the fault code is not listed in the following table, disconnect the hob from the power supply and wait 30 seconds before reconnecting it. If this display appears again, contact Customer Service and specify the exact fault code.
- If an error occurs, the appliance does not switch to low power mode.
- In order to protect the appliance's electronic parts from overheating or surge currents, the hob may temporarily reduce the power level.

25.2 Information on the display panel

Fault	Cause and troubleshooting
No displays light up.	The power supply has been disconnected. ▸ Use other electrical appliances to check whether there has been a power failure.
	The appliance has not been connected as shown in the circuit diagram. ▸ Connect the appliance in accordance with the circuit diagram.
	Electronics fault ▸ If you are unable to rectify the fault, inform the technical after-sales service.
Ventilation system not working	The appliance has not been connected as shown in the circuit diagram. ▸ Connect the appliance in accordance with the circuit diagram.
The displays flash.	The control panel is wet or an object is covering it. ▸ Dry the control panel or remove the object.
F	The odour filter is saturated or the saturation indicator lights up even though the filter has been replaced. ▸ Change the filter and reset the filter saturation indicator. You can find additional information about this in the section entitled . → *"Cleaning and servicing", Page 18*
F2, F 4, E 7015, E 8207, E 8208	The electronics have overheated and one or all of the cooking zones have been switched off. ▸ Wait until the electronics have cooled down sufficiently. Then touch any button on the control panel.
F5 + power level and audible signal	There is hot cookware in the vicinity of the control panel. This may cause the electronics to overheat. ▸ Remove the cookware. The fault display goes out shortly afterwards. You can continue to cook.
F5 and signal tone	There is hot cookware in the vicinity of the control panel. The cooking zone has been switched off to protect the electronics. ▸ Remove the cookware. Wait a few seconds. Touch any button. When the fault display goes out, you can continue cooking.
F1/F6	The cooking zone has overheated and has been switched off to protect the work surface. ▸ Wait until the electronics have cooled down sufficiently before switching the cooking zone back on.
F8	The cooking zone has been operating continuously for an extended period. ▸ Individual safety switch-off is switched on. Touch any button to switch off the display so that you can set the cooking zone.
E 9000/E9010	The operating voltage is incorrect and outside of the normal operating range. ▸ Contact your energy supplier.
U400/E9011	The hob is not connected correctly. ▸ Disconnect the hob from the mains. Connect the hob in accordance with the circuit diagram.
d E	Demo mode is activated. ▸ Switch off demo mode in the basic settings.
Home Connect is not working properly.	Different causes are possible. ▸ Go to *www.home-connect.com*.
Animations on the 000 displays	In certain circumstances, the hob can perform self-maintenance tasks, e.g. a firmware update, optimisation or troubleshooting. ▸ Wait until the process is complete and only then switch the hob on.

25.3 Normal noises from your appliance

An induction hob may sometimes cause noises or vibrations, such as buzzing, crackling, hissing noises, fan noises or rhythmic noises.

26 Disposal

26.1 Disposing of old appliance

Valuable raw materials can be reused by recycling.

1. Unplug the appliance from the mains.
2. Cut through the power cord.
3. Dispose of the appliance in an environmentally friendly manner.
   Information about current disposal methods are available from your specialist dealer or local authority.

This appliance is labelled in accordance with European Directive 2012/19/EU concerning used electrical and electronic appliances (waste electrical and electronic equipment - WEEE).
The guideline determines the framework for the return and recycling of used appliances as applicable throughout the EU.

27 Customer Service

Function-relevant genuine spare parts according to the corresponding Ecodesign Order can be obtained from Customer Service for a period of at least 10 years from the date on which your appliance was placed on the market within the European Economic Area.

Note: Under the terms of the manufacturer's warranty the use of Customer Service is free of charge.

Detailed information about the warranty period and the warranty conditions in your country is available via the QR code on the enclosed document on service contacts and warranty conditions, from our customer service or on our website.
If you contact Customer Service, you will require the product number (E-Nr.), the production number (FD) and the consecutive numbering (Z-Nr.) of your appliance.
You can find the contact details for our customer service via the QR code on the enclosed document on service contacts and warranty conditions or on our website.
You can find the information required as per Regulations (EU) 65/2014, (EU) 66/2014 and (EU) 2023/826 online at *www.bosch-home.com* on the product and service pages for your appliance, in the area of user manuals and additional documents.

27.1 Product number (E-Nr.), production number (FD) and consecutive numbering (Z-Nr.)

You can find the product number (E-Nr.), the production number (FD) and the consecutive numbering (Z-Nr.) on the appliance's rating plate.

The rating plate can be found:
- On the appliance certificate.
- On the underside of the hob, towards the front.

The product number (E no.) can also be found on the glass ceramic. You can also display the customer service index (KI) and the production number (FD) in the basic settings. →*Page 14*

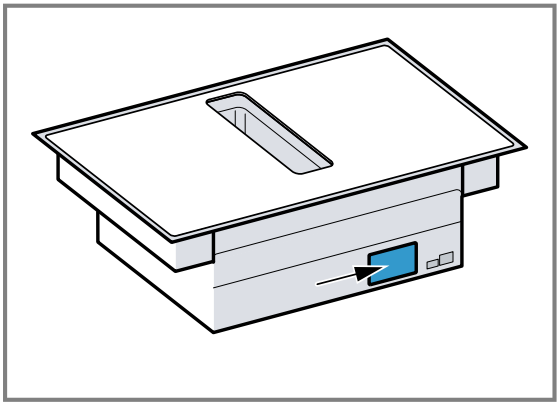

Make a note of your appliance's details and the Customer Service telephone number to find them again quickly.

28 Information regarding Free and Open Source Software

This product includes software components that are licensed by the copyright holders as free or open source software.

The applicable licence information is stored on your home appliance. You can also access the applicable licence information via your Home Connect app: "Profile -> Legal information -> Licence Information".[1] You can

[1] Depending on the appliance specifications

download the licence information on the brand product website. (Please search on the product website for your appliance model and additional documents). Alternatively, you can request the relevant information from ossrequest@bshg.com or BSH Hausgeräte GmbH, Carl-Wery-Str. 34, 81739 Munich, Germany.
The source code will be made available to you on request.

Please send your request to ossrequest@bshg.com or BSH Hausgeräte GmbH, Carl-Wery-Str.34, 81739 Munich, Germany.
Subject: „OSSREQUEST“
The cost of performing your request will be charged to you. This offer is valid for three years from the date of purchase or at least as long as we offer support and spare parts for the relevant appliance.

29 Declaration of Conformity

BSH Hausgeräte GmbH hereby declares that the appliance with Home Connect functionality conforms to the essential requirements and other relevant provisions of Directive 2014/53/EU.
A detailed RED Declaration of Conformity can be found online at *www.bosch-home.com* among the additional documents on the product page for your appliance.

CE

Hereby, BSH Hausgeräte GmbH declares that the appliance with Home Connect functionality is in compliance with relevant statutory requirements. [1]
A detailed Declaration of Conformity can be found online at *www.bosch-home.co.uk* among the additional documents on the product page for your appliance. [1]

UK CA

2.4 GHz band (2400–2483.5 MHz): Max. 100 mW
5-GHz band (5150–5350 MHz + 5470–5725 MHz): max. 130 mW

!	BE	BG	CZ	DK	DE	EE	IE	EL	ES
	FR	HR	IT	CY	LI	LV	LT	LU	HU
	MT	NL	AT	PL	PT	RO	SI	SK	FI
	SE	NO	CH	TR	IS	UK (NI)			
5 GHz WLAN (Wi-Fi): For indoor use only.									

AL	BA	MD	ME	MK	RS	UK	UA
5 GHz WLAN (Wi-Fi): For indoor use only.							

29.1 Statement of Compliance for Great Britain

Product type
This statement of compliance covers the products described in this information for use whose model identifier group is seen on the title page. The full model identifier is made up of the characters before the slash in the product number (E no.) which can be found on the rating plate. Alternatively, you can also find the model identifier in the first line of the UK Energy Label.

Name and address of manufacturer
BSH Hausgeräte GmbH, Carl-Wery-Strasse 34, 81739 München, Germany

This statement of compliance is prepared by the manufacturer.

The manufacturer, BSH Hausgeräte GmbH deems that it has complied with
- provision 5.1-1 of ETSI EN 303 645 v2.1.1 and, where relevant, provision 5.1-2 of ETSI EN 303 645 v2.1.1;
- provision 5.2-1 of ETSI EN 303 645 v2.1.1;
- provision 5.3-13 of ETSI EN 303 645 v2.1.1.

Support period
BSH Hausgeräte GmbH will provide security updates that are necessary to maintain the main functions free of charge until at least 28/02/2034.

30 Test dishes

These recommended settings are intended for test institutes to facilitate the testing of our appliances. The tests were carried out using our cookware sets for induction hobs. If required, these accessory sets can be pur-

[1] Only applies to Great Britain

chased at a later point from specialist retailers, or through our technical after-sales service or our online shop.

30.1 Melting the chocolate coating

Ingredients: 150 g dark chocolate (55% cocoa).
- 16 cm saucepan without lid
  - Boiling: Power level 1.

30.2 Heating and keeping lentil stew warm

Recipe in accordance with DIN 44550
Initial temperature 20 °C
Heating up without stirring
- 16 cm saucepan with lid, amount: 450 g
  - Heating up: Duration 1 min. 30 sec., power level 9
  - Simmering: Power level 1.
- 20 cm saucepan with lid, amount: 800 g
  - Heating up: Duration 2 min. 30 sec., power level 9
  - Simmering: Power level 1.

30.3 Heating and keeping lentil stew warm

E.g.: Lentil diameter 5–7 mm. Initial temperature 20 °C
Stir after heating for 1 minute
- 16 cm saucepan with lid, amount: 500 g
  - Heating up: Duration approx. 1 min. 30 sec., power level 9
  - Simmering: Power level 1.
- 20 cm saucepan with lid, amount: 1 kg
  - Heating up: Duration approx. 2 min. 30 sec., power level 9
  - Simmering: Power level 1.

30.4 Béchamel sauce

Milk temperature: 7 °C
- 16 cm saucepan without lid, ingredients: 40 g butter, 40 g flour, 0.5 l milk with 3.5% fat content and a pinch of salt

Preparing Béchamel sauce

1. Melt the butter, stir in the flour and salt, and heat up the mixture.
   ▸ Heating up: Duration 6 min., power level 2
2. Add the milk to the roux and bring to the boil, stirring continuously.
   ▸ Heating up: Duration 6 min. 30 sec., power level 7
3. Once the Béchamel sauce comes to the boil, leave it on the cooking zone for a further two minutes.
   ▸ Simmering: Power level 2

30.5 Cooking rice pudding with the lid on

Milk temperature: 7 °C
1. Heat the milk until it starts to rise up. Heat up without a lid. Stir after heating for 10 min.
2. Set the recommended power level and add rice, sugar and salt to the milk.
The cooking time, including heating up, is approx. 45 minutes.
- 16 cm saucepan, ingredients: 190 g short-grain rice, 90 g sugar, 750 ml milk with 3.5% fat content and 1 g salt
  - Heating up: Duration approx. 5 min. 30 sec., power level 8.
  - Simmering: Power level 3
- 20 cm saucepan, ingredients: 250 g short-grain rice, 120 g sugar, 1 l milk with 3.5% fat content and 1.5 g salt
  - Heating up: Duration approx. 5 min. 30 sec., power level 8.
  - Simmering: Power level 3, stir after 10 minutes

30.6 Cooking rice pudding without a lid

Milk temperature: 7 °C
1. Add the ingredients to the milk and heat the mixture up while stirring continuously.
2. Once the milk has reached approx. 90 °C, select the recommended power level and leave it to simmer on a low heat for approx. 50 minutes.
- 16 cm saucepan without lid, ingredients: 190 g short-grain rice, 90 g sugar, 750 ml milk with 3.5% fat content and 1 g salt
  - Heating up: Duration approx. 5 min. 30 sec., power level 8.
  - Simmering: Power level 3
- 20 cm saucepan without lid, ingredients: 250 g short-grain rice, 120 g sugar, 1 l milk with 3.5% fat content and 1.5 g salt
  - Heating up: Duration approx. 5 min. 30 sec., power level 8.
  - Simmering: Power level 2.

30.7 Cooking rice

Recipe in accordance with DIN 44550
Water temperature: 20 °C
- 16 cm saucepan with lid, ingredients: 125 g long-grain rice, 300 g water and a pinch of salt
  - Heating up: Duration approx. 2 min. 30 sec., power level 9
  - Simmering: Power level 2
- 20 cm saucepan with lid, ingredients: 250g long-grain rice, 600 g water and a pinch of salt
  - Heating up: Duration approx. 2 min. 30 sec., power level 9
  - Simmering: Power level 2.

30.8 Roasting a pork loin

Initial temperature of the loin: 7 °C
- 24 cm pan without lid, ingredients: 3 pork loins, total weight approx. 300 g, 1 cm thick, and 15 g sunflower oil
  - Heating up: Duration approx. 1 min. 30 sec., power level 9
  - Simmering: Power level 7

30.9 Preparing crêpes

Recipe in accordance with DIN EN 60350-2
- 24 cm pan without lid, ingredients: 55 ml batter per crêpe
  - Heating up: Duration 1 min. 30 sec., power level 9
  - Simmering: Power level 7

30.10 Deep-fat frying frozen chips

- Pot dia. 20 cm without lid: ingredients: 2 l sunflower oil. For each frying time: 200 g frozen chips, 1 cm thick.
  - Heating up: Power level 9, until the oil temperature reaches 180 °C.
  - Simmering: Power level 9

Thank you for buying a Bosch Home Appliance!

Register your new device on MyBosch now and profit directly from:

- **Expert tips & tricks for your appliance**
- **Warranty extension options**
- **Discounts for accessories & spare-parts**
- **Digital manual and all appliance data at hand**
- **Easy access to Bosch Home Appliances Service**

Free and easy registration – also on mobile phones:
www.bosch-home.com/welcome

Looking for help? You'll find it here.

Expert advice for your Bosch home appliances, help with problems or a repair from Bosch experts.
Find out everything about the many ways Bosch can support you:
www.bosch-home.com/service
Contact data of all countries are listed in the attached service directory.

BSH Hausgeräte GmbH
Carl-Wery-Straße 34
81739 München, GERMANY
www.bosch-home.com

A Bosch Company

Valid within Great Britain:
Imported to Great Britain by
BSH Home Appliances Ltd.
Grand Union House
Old Wolverton Road
Wolverton, Milton Keynes
MK12 5PT
United Kingdom

9002025859 (050718) REG25
en