BOSCH

Register your new device on MyBosch now and get free benefits:
bosch-home.com/welcome

MyBosch

Oven

HBA574B.3

[en] User manual and installation instructions

Further information and explanations are available online:

Table of contents

INFORMATION FOR USE

1 **Safety** ... 2
2 **Preventing material damage** ... 5
3 **Environmental protection and saving energy** ... 5
4 **Familiarising yourself with your appliance** ... 7
5 **Accessories** ... 9
6 **Before using for the first time** ... 11
7 **Basic operation** ... 11
8 **Rapid heating** ... 11
9 **Time-setting options** ... 12
10 **Programmes** ... 13
11 **Childproof lock** ... 15
12 **Basic settings** ... 15
13 **Cleaning and servicing** ... 16
14 **Pyrolytic self-cleaning** ... 17
15 **Cleaning aid** ... 18
16 **Appliance door** ... 19
17 **Shelf supports** ... 22
18 **Troubleshooting** ... 23
19 **Disposal** ... 24
20 **Customer Service** ... 24
21 **How it works** ... 25

22 **INSTALLATION INSTRUCTIONS** ... 29
22.1 **General installation instructions** ... 29

⚠ 1 Safety

Observe the following safety instructions.

1.1 General information

- Read this instruction manual carefully.
- Keep the instruction manual and the product information safe for future reference or for the next owner.
- Do not connect the appliance if it has been damaged in transit.

1.2 Intended use

This appliance is designed only to be built into kitchen units. Read the special installation instructions.
Only a licensed professional may connect appliances without plugs. Damage caused by incorrect connection is not covered under the warranty.
Only use this appliance:
- To prepare meals and drinks.
- in private households and in enclosed spaces in a domestic environment.
- up to an altitude of max. 4000 m above sea level.

Do not use the appliance:
- with an external timer or a remote control.

1.3 Restriction on user group

This appliance may be used by children aged 8 or over and by people who have reduced physical, sensory or mental abilities or inadequate experience and/or knowledge, provided that they are supervised or have been instructed on how to use the appliance safely and have understood the resulting dangers.
Do not let children play with the appliance.
Children must not perform cleaning or user maintenance unless they are at least 15 years old and are being supervised.
Keep children under the age of 8 years away from the appliance and power cable.

1.4 Safe use

Always place accessories in the cooking compartment the right way round.
→ *"Accessories", Page 9*

⚠ WARNING – Risk of fire!

Combustible objects that are left in the cooking compartment may catch fire.

- Never store combustible objects in the cooking compartment.
- If smoke is emitted, the appliance must be switched off or the plug must be pulled out and the door must be held closed in order to stifle any flames.

Loose food remnants, fat and meat juices may catch fire.

- Before using the appliance, remove the worst of the food residues and remnants from the cooking compartment, heating elements and accessories.

Opening the appliance door creates a draught. Greaseproof paper may come into contact with the heating element and catch fire.

- Never place greaseproof paper loosely over accessories when preheating the appliance and while cooking.
- Always cut greaseproof paper to size and use a plate or baking tin to hold it down.

⚠ WARNING – Risk of burns!

The appliance and its parts that can be touched become hot during use.

- Caution should be exercised here in order to avoid touching heating elements.
- Young children under 8 years of age must be kept away from the appliance.

Accessories and cookware get very hot.

- Always use oven gloves to remove accessories or cookware from the cooking compartment.

When the cooking compartment is hot, any alcoholic vapours inside may catch fire. The appliance door may spring open. Hot steam and jets of flame may escape.

- Only use small quantities of drinks with a high alcohol content in food.
- Do not heat spirits (≥ 15% vol.) when undiluted (e.g. for marinating or pouring over food).
- Open the appliance door carefully.

⚠ WARNING – Risk of scalding!

The accessible parts of the appliance become hot during operation.

- Never touch these hot parts.
- Keep children at a safe distance.

Hot steam may escape when you open the appliance door. Steam may not be visible, depending on the temperature.

- Open the appliance door carefully.
- Keep children at a safe distance.

If there is water in the cooking compartment when it is hot, this may create hot steam.

- Never pour water into the cooking compartment when the cooking compartment is hot.

⚠ WARNING – Risk of injury!

Scratched glass in the appliance door may develop into a crack.

- Do not use any harsh or abrasive cleaners or sharp metal scrapers to clean the glass on the oven door, as they may scratch the surface.

The appliance and its parts that can be touched may have sharp edges.

- Take care when handling and cleaning them.
- If possible, wear protective gloves.

The hinges on the appliance door move when the door is opened and closed, which could trap your fingers.

- Keep your hands away from the hinges.

Components inside the appliance door may have sharp edges.

- Wear protective gloves.

Alcoholic vapours may catch fire in the hot cooking compartment, and the appliance door may spring open and may fall off. The door panels may shatter and fragment.

→ *"Preventing material damage", Page 5*

- Only use small quantities of drinks with a high alcohol content in food.
- Do not heat spirits (≥ 15% vol.) when undiluted (e.g. for marinating or pouring over food).
- Open the appliance door carefully.

⚠ WARNING – Risk of electric shock!

Improper repairs are dangerous.

- Repairs to the appliance should only be carried out by trained specialist staff.
- Only use genuine spare parts when repairing the appliance.
- If the power cord of this appliance is damaged, it must be replaced by trained specialist staff.

If the insulation of the power cord is damaged, this is dangerous.
- Never let the power cord come into contact with hot appliance parts or heat sources.
- Never let the power cord come into contact with sharp points or edges.
- Never kink, crush or modify the power cord.

An ingress of moisture can cause an electric shock.
- Do not use steam- or high-pressure cleaners to clean the appliance.

If the appliance or the power cord is damaged, this is dangerous.
- Never operate a damaged appliance.
- Never pull on the power cord to unplug the appliance. Always unplug the appliance at the mains.
- If the appliance or the power cord is damaged, immediately unplug the power cord or switch off the fuse in the fuse box.
- Call customer services. → *Page 24*

⚠ WARNING – Risk of suffocation!

Children may put packaging material over their heads or wrap themselves up in it and suffocate.
- Keep packaging material away from children.
- Do not let children play with packaging material.

Children may breathe in or swallow small parts, causing them to suffocate.
- Keep small parts away from children.
- Do not let children play with small parts.

1.5 Halogen bulb

⚠ WARNING – Risk of burns!

The bulbs in the cooking compartment get very hot. There is still a risk of burning for some time after they have been switched off.
- Do not touch the glass cover.
- Avoid contact with your skin when cleaning.

⚠ WARNING – Risk of electric shock!

When changing the bulb, the bulb socket contacts are live.
- Before replacing the bulb, ensure that the appliance is switched off in order to prevent a potential electric shock.
- Also unplug the appliance from the mains or switch off the fuse in the fuse box.

1.6 Cleaning function

⚠ WARNING – Risk of fire!

Loose food remnants, fat and meat juices may catch fire when the cleaning function is in progress.
- Before you start the cleaning function, always remove coarse dirt from the cooking compartment.
- Never clean accessories at the same time.

The outside of the appliance gets very hot when the cleaning function is in progress.
- Never hang combustible objects, e.g. tea towels, on the door handle.
- Leave the front of the appliance clear.
- Keep children at a safe distance.

If the door seal is damaged, a large amount of heat is generated around the door.
- Do not scrub or remove the seal.
- Never operate the appliance if the seal is damaged or missing.

⚠ WARNING – Risk of serious harm to health!

The appliance gets very hot when the cleaning function is in progress. The non-stick coating on baking trays and tins is destroyed and noxious gases are released.
- Never clean non-stick baking trays or baking tins using the cleaning function.
- Never clean accessories at the same time.

⚠ WARNING – Risk of harm to health!

The cleaning function heats up the cooking compartment to a very high temperature so that food left over from roasting, grilling and baking will burn off. This process releases vapours, which can irritate mucous membranes.
- Keep the kitchen well ventilated while the cleaning function is running.
- Do not remain in the room for long periods.
- Keep children and pets away.

⚠ WARNING – Risk of burns!

The cooking compartment gets very hot when the cleaning function is in progress.
- Never open the appliance door.
- Allow the appliance to cool down.
- Keep children at a safe distance.

⚠ The outside of the appliance gets very hot when the cleaning function is in progress.
- Never touch the appliance door.
- Allow the appliance to cool down.
- Keep children at a safe distance.

2 Preventing material damage

2.1 General

ATTENTION!
Alcoholic vapours may catch fire in the hot cooking compartment and cause permanent damage to the appliance. The appliance door may spring open due to an explosion and it may fall off. The door panels may shatter and fragment. Due to the resulting negative pressure, the cooking compartment may become considerably deformed inwards.

- Do not heat spirits (≥ 15% vol.) when undiluted (e.g. for marinating or pouring over food).

If there is water on the cooking compartment floor when operating the appliance at temperatures above 120 °C, this will damage the enamel.

- Do not use the appliance if there is water on the cooking compartment floor.
- Wipe away any water on the cooking compartment floor before operation.

Objects on the cooking compartment floor at over 50 °C will cause heat to build up. The baking and roasting times will no longer be correct and the enamel will be damaged.

- Do not place any accessories, greaseproof paper or foil of any kind on the cooking compartment floor.
- Only place cookware on the cooking compartment floor if a temperature under 50 °C has been set.

When the cooking compartment is hot, any water inside it will create steam. The change in temperature may cause damage.

- Never pour water into the cooking compartment when it is still hot.
- Never place cookware containing water on the cooking compartment floor.

The prolonged presence of moisture in the cooking compartment leads to corrosion.

- Allow the cooking compartment to dry after use.
- Do not keep moist food in the cooking compartment for a long time with the door closed.
- Do not store food in the cooking compartment.
- Take care not to trap anything in the appliance door.

Fruit juice dripping from the baking tray leaves stains that cannot be removed.

- When baking very juicy fruit flans, do not pack too much on the baking tray.
- If possible, use the deeper universal pan.

Using oven cleaner in a hot cooking compartment damages the enamel.

- Never use oven cleaner in the cooking compartment when it is still warm.
- Remove all food remnants from the cooking compartment and the appliance door before you next heat up the appliance.

If the seal is very dirty, the appliance door will no longer close properly during operation. This may damage the front of adjacent kitchen units.

- Keep the seal clean at all times.
- Never operate the appliance if the seal is damaged or missing.

Sitting or placing objects on the appliance door may damage it.

- Do not place, hang or support objects on the appliance door.
- Do not place cookware or accessories on the appliance door.

With certain models, accessories may scratch the door pane when closing the appliance door.

- Always push accessories fully into the cooking compartment.

If aluminium foil comes into contact with the door pane, it could cause permanent discolouration.

- Do not allow aluminium foil in the cooking compartment to come into contact with the door pane.

3 Environmental protection and saving energy

3.1 Disposing of packaging

The packaging materials are environmentally compatible and can be recycled.

- Sort the individual components by type and dispose of them separately.

3.2 Saving energy

If you follow these instructions, your appliance will use less power.

Only preheat the appliance if the recipe or the recommended settings tell you to do so.
→ *"How it works", Page 25*

- Not preheating the appliance can reduce the energy used by up to 20%.

Use dark-coloured, black-coated or enamelled baking tins.

- These types of baking tin absorb the heat particularly well.

Open the appliance door as little as possible during operation.

- This maintains the temperature in the cooking compartment and eliminates the need for the appliance to reheat.

When baking multiple dishes, do so in succession or in parallel.

- The cooking compartment is heated after baking the first dish. This reduces the baking time for the subsequent cakes.

For longer cooking times, you can switch the appliance off 10 minutes before the cooking time ends.

- There is sufficient residual heat to finish cooking the dish.

Remove any accessories that are not being used from the cooking compartment.

- Accessories that are not being used do not need to be heated.

Allow frozen food to defrost before cooking.

- This saves the energy that would otherwise be required to defrost it.

You can find product information in accordance with (EU) 65/2014 and (EU) 66/2014 below the energy label and online on the product page for your appliance.

Note:

The appliance requires:

- A maximum of 1 W in standby mode with the display switched on
- A maximum of 0.5 W in standby mode with the display switched off

4 Familiarising yourself with your appliance

4.1 Control elements

You can use the control panel to configure all functions of your appliance and to obtain information about the operating status.

Note: On certain models, specific details such as colour and shape may differ from those pictured.

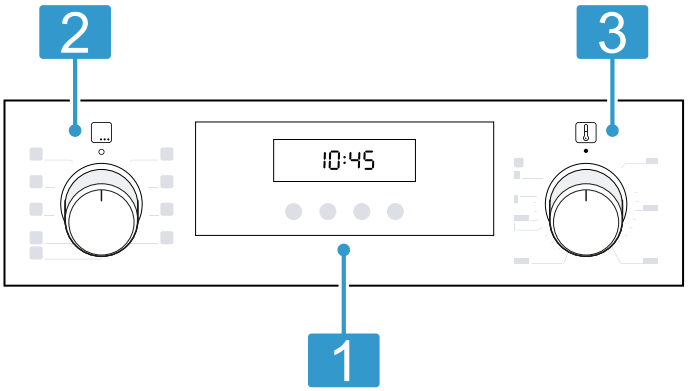

1	**Buttons and display** The buttons are touch-sensitive surfaces. To select a function, simply press lightly on the relevant field. The display shows symbols for active functions and the time-setting options. → *"Buttons and display", Page 7*
2	**Function selector** Use the function selector to set the types of heating and other functions. You can turn the function selector clockwise or anti-clockwise from the zero setting ○. Depending on the appliance, the function selector can be pushed in. Press on the function selector to click it into or out of the zero setting ○. → *"Types of heating and functions", Page 7*
3	**Temperature selector** Use the temperature selector to set the temperature for the type of heating and select settings for other functions. You can turn the temperature selector clockwise or anti-clockwise from the zero setting ●. Depending on the appliance, the temperature selector can be pushed in. Press on the temperature selector to click it into or out of the zero setting ●. → *"Temperature and setting levels", Page 8*

4.2 Buttons and display

You can use the buttons to set various functions for your appliance. The display shows the settings.
If a function is active, the corresponding symbol lights up on the display. The clock symbol ◷ only lights up when you change the time.

Symbol	Function
◷	Select the time ◷, timer 🔔, cooking time I→I and end time →I. To select the individual time-setting options, press the ◷ button several times. → *"Time-setting options", Page 12*
— +	Decrease the setting values. Increase the setting values.
kg	Select a weight for the programmes. → *"Programmes", Page 13*
kg	To activate or deactivate the childproof lock, press and hold for approx. 3 seconds. → *"Childproof lock", Page 15*

4.3 Types of heating and functions

To ensure that you always find the right type of heating to cook your food, we explain the differences and applications below.

Symbol	Type of heating	What it's used for and how it works
	3D hot air	Bake or roast on one or more levels. The fan distributes the heat from the ring heating element in the back wall evenly around the cooking compartment.

Symbol	Type of heating	What it's used for and how it works
	Hot air gentle	Cook selected dishes gently on one level without preheating. The fan distributes the heat from the ring-shaped heating element in the back wall evenly around the cooking compartment. The food is cooked in phases using residual heat. Always keep the appliance door closed when cooking. If you open the appliance door even briefly, the appliance will continue to heat without utilising any residual heat. Select a temperature between 120 °C and 230 °C. This type of heating is used to determine the energy consumption in air recirculation mode and the energy efficiency class.
	Pizza setting	Cook pizza or food that requires a lot of heat from below. The bottom heating element and the ring heating element in the back wall heat the cooking compartment.
	Bottom heating	Final baking or cook food in a bain marie. The heat is emitted from below.
	Full-surface grill Grill settings: 1 = low 2 = medium 3 = high	Grill flat items such as vegetables and sausages, or make toast. Gratinate food. The entire area below the grill element becomes hot.
	Hot air grilling	Roast poultry, whole fish or larger pieces of meat. The grill element and the fan switch on and off alternately. The fan circulates the hot air around the food.
	Top/bottom heating	Traditionally bake or roast on one level. This type of heating is especially good for cakes with moist toppings. The heat is emitted evenly from above and below. This type of heating is used to measure the energy consumption in the conventional mode.

Other functions

This is where you can find an overview of other functions on the function selector or in the menu of your appliance.

Symbol	Function	Use
	Rapid heating	Rapidly preheat the cooking compartment without accessories. → *"Rapid heating", Page 11*
	Lighting	Light up the cooking compartment without heating. → *"Lighting", Page 9*
	Programmes	Use programmed setting values for various types of food. → *"Programmes", Page 13*
	Pyrolytic self-cleaning	Set the cleaning function, which cleans the cooking compartment virtually independently → *"Pyrolytic self-cleaning", Page 17*

4.4 Temperature and setting levels

There are different settings for the types of heating and functions.

Note: For grill setting 3, the appliance lowers the setting to grill setting 1 after approx. 20 minutes.

Symbol	Function	Use
●	Zero setting	The appliance is not heating up.
50 - 275	Temperature range	Set the temperature in the cooking compartment in °C.

Symbol	Function	Use
1, 2, 3 or I, II, III	Grill settings	Set the grill settings for Full-surface grill 1 = low 2 = medium 3 = high
1, 2, 3 or I, II, III	Cleaning settings	Set the cleaning settings for Pyrolytic self-cleaning. 1 = light 2 = medium 3 = intensive → *"Pyrolytic self-cleaning", Page 17*

Heat-up indicator

The appliance indicates when it is heating up.
When the appliance is heating, the 🌡 symbol lights up on the display.
When you preheat the appliance, the optimal time to place your food in the cooking compartment is when the symbol goes out.

Notes

- The heat-up indicator only appears for types of heating for which a temperature is set. The heat-up indicator does not appear for grill settings, for example.
- Due to thermal inertia, the temperature displayed may differ slightly from the actual temperature inside the cooking compartment.

4.5 Cooking compartment

The functions in the cooking compartment make your appliance easier to use.

Shelf supports

The shelf supports in the cooking compartment enable you to place accessories at different heights.
Your appliance has 5 shelf positions. The shelf positions are numbered from bottom to top.
You can remove the shelf supports, e.g. for cleaning.
→ *"Shelf supports", Page 22*

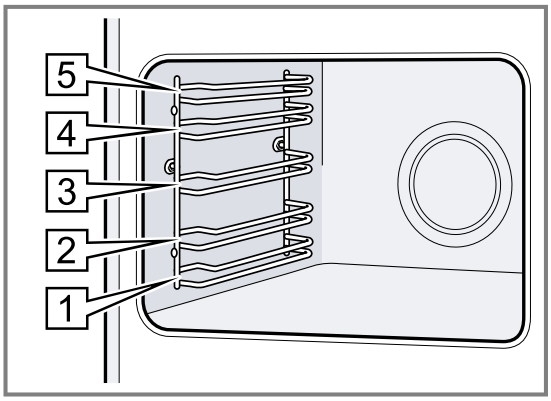

Lighting

The oven lamp lights up the cooking compartment.
With most types of heating and functions, the lighting lights up during operation. The lighting goes off when operation ends.
The oven light setting on the function selector can be used to switch on the light without heating.

Cooling fan

The cooling fan switches on automatically during operation. The hot air escapes above the door.
The appliance detects increased moisture in the cooking compartment. The intensity and operating noise of the cooling fan may vary to regulate the moisture.

ATTENTION!

Covering the ventilation slots will cause the appliance to overheat.

- Do not cover the ventilation slots.

To ensure that the appliance cools down more quickly after operation, the cooling fan continues to run for a certain period afterwards.

Appliance door

If you open the appliance door during operation, the operation continues.

5 Accessories

Use original accessories. These have been made especially for your appliance.

Note: Accessories may become deformed if they get hot. Deformation has no effect on function. As the accessory cools down, it will regain its original shape.

The accessories supplied may differ depending on the appliance model.

Accessories		Use
Wire rack	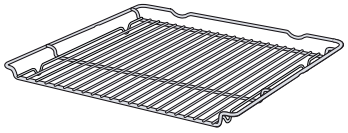	■ Cake tins ■ Ovenproof dishes ■ Tableware ■ Meat, e.g. roasting joints or steak ■ Frozen meals
Universal pan	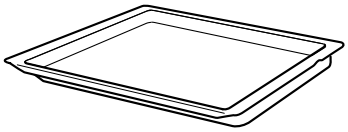	■ Moist cakes ■ Baked items ■ Bread ■ Large roasts ■ Frozen meals ■ Catching dripping liquids, e.g. fat when grilling food on the wire rack.

5.1 Locking function

The locking function prevents the accessories from tilting when they are pulled out.
You can pull out the accessories approximately halfway without them tipping. The accessories must be inserted into the cooking compartment correctly for the tilt protection to work properly.

5.2 Sliding accessories into the cooking compartment

Always slide accessories into the cooking compartment correctly. This is the only way to ensure that accessories can be pulled out approximately halfway without tipping.

1. Turn the accessories so that the notch [a] is at the rear and is facing downwards.
2. Insert accessories between the two guide rods for the shelf position.

Wire rack	Insert the wire rack with the open side facing the appliance door and the curved lip ⌣ facing downwards. 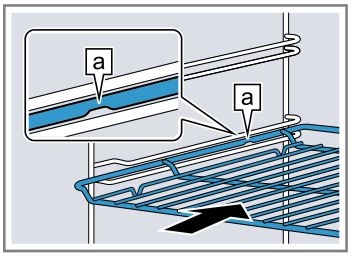
Baking tray E.g. universal pan or baking tray	Slide the tray, e.g. the universal pan, in with the sloping edge [b] facing the appliance door. 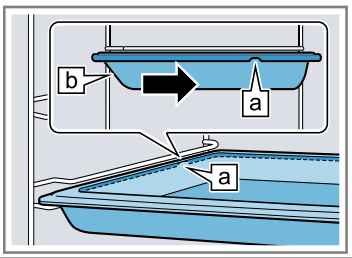

3. Push the accessory all the way in, making sure that it does not touch the appliance door.

Note: Take any accessories that you will not be using out of the cooking compartment while the appliance is in operation.

Combining accessories

You can combine the wire rack with the universal pan to catch any liquid that drips down.

1. Place the wire rack on the universal pan so that both spacers [a] are on the rear edge of the universal pan.
2. Insert the universal pan between the two guide rods for a shelf position. In so doing, the wire rack is on top of the upper guide rod.

Wire rack on universal pan	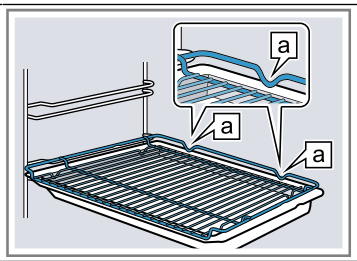

5.3 Other accessories

You can purchase other accessories from our customer service, specialist retailers or online.
You will find a comprehensive range of products for your appliance in our brochures and online:
www.bosch-home.com
Accessories are appliance-specific. When purchasing accessories, always quote the exact product number (E no.) of your appliance.
You can find out which accessories are available for your appliance in our online shop or from our customer service.

6 Before using for the first time

Configure the settings for initial start-up. Clean the appliance and accessories.

6.1 Initial use

You need to make settings for initial use before you can use your appliance.

Setting the time on the clock

Once the appliance has been connected to the mains or following a power failure, the time flashes on the display. The time starts at "12:00". Set the current time.

Requirement: The function selector must be set to the "Off" position ○.

1. Use the − or + button to set the time.
2. Press the ◷ button.
✔ The time that is set appears in the display.

6.2 Cleaning the appliance before using it for the first time

Before using the appliance to cook food for the first time, you must clean the cooking compartment and accessories.

1. Remove the product information and the accessories from the cooking compartment. Remove any leftover packaging, such as polystyrene pellets, and any adhesive tape that is in or on the appliance.
2. Wipe the smooth surfaces in the cooking compartment with a soft, damp cloth.
3. Set the type of heating and the temperature.
→ *"Basic operation", Page 11*

Type of heating	3D hot air
Temperature	Maximum
Duration	1 hour

4. Ventilate the kitchen while the appliance is heating.
5. Switch off the appliance after the specified cooking time.
6. Once the appliance has cooled down, clean the smooth surfaces in the cooking compartment with a detergent solution and a dish cloth.
7. Clean the accessories with soapy water and a dish cloth or soft brush.

7 Basic operation

7.1 Switching the appliance on and off

1. To switch on the appliance, turn the function selector to any position other than the zero setting ○.
2. To switch off the appliance, turn the function selector to the zero setting ○.

7.2 Setting the type of heating and temperature

1. Use the function selector to set the type of heating.
2. Use the temperature selector to set the temperature or grill setting.
✔ The appliance starts heating after a few seconds.
3. When your food is ready, switch off the appliance.

Tip: The most suitable type of heating for your food can be found in the description of the type of heating.
→ *"Types of heating and functions", Page 7*

Note: You can also set a cooking time and an operation end time on the appliance.
→ *"Time-setting options", Page 12*

Changing the type of heating

You can change the type of heating at any time.

▸ Use the function selector to change the type of heating.
✔ The appliance applies the change after a few seconds.

Changing the temperature

You can change the temperature at any time.

▸ Use the temperature selector to change the temperature.
✔ The appliance applies the change after a few seconds.

8 Rapid heating

To save time, you can use rapid heating to shorten the preheat time.

8.1 Setting rapid heating

To ensure an even cooking result, do not place the food in the cooking compartment until rapid heating has come to an end.

1. Use the function selector to select rapid heating.
2. Use the temperature selector to set the temperature.
Only use rapid heating when a temperature of over 100 °C has been set.
✔ Rapid heating starts after a few seconds.
✔ When the rapid heating process ends, an audible signal sounds and the heating indicator goes out.
3. Use the function selector to set a suitable type of heating.
The most suitable types of heating are:
– 3D hot air
– Top/bottom heating
4. Place the food in the cooking compartment.

9 Time-setting options

Your appliance has different time-setting options, with which you can control its operation.

9.1 Overview of the time-setting options

Use the ⏲ button to select the different time-setting options.

Time-setting option	Use
Timer 🔔	You can set the timer to run independently of the operation. It does not affect the appliance.
Cooking time I→I	If you set a cooking time, the appliance stops heating automatically once this time has elapsed.
End →I	For the cooking time, you can set the time at which you want the operation to end. The appliance starts up automatically so that the operation finishes at the required time.
Time ⏲	You can set the time.

9.2 Setting the timer

The timer runs independently during the operation. You can set the timer to times of up to 23 hours and 59 minutes, regardless of whether the appliance is on or off. The timer has its own signal so that you can tell whether it is the timer or a cooking time that has elapsed.

Note: The timer and cooking time cannot count down at the same time. If a cooking time has already been set, you cannot set the timer.

1. Press the ⏲ button repeatedly until 🔔 is highlighted on the display.
2. Use the — or + button to set the timer duration.

Button	Default value
—	5 minutes
+	10 minutes

The timer duration can be set in 30-second increments up to 10 minutes. The time increments then become bigger as the value increases.

✔ The timer starts and the timer duration begins to count down after a few seconds.
✔ An audible signal sounds and the timer duration is zero in the display when the timer duration has elapsed.

3. Press any button to switch off the timer.

Changing the timer

You can change the timer duration at any time.

Requirement: 🔔 is highlighted in the display.

▸ Use the — button to change the timer duration.
✔ The appliance applies the change after a few seconds.

Cancelling the timer

You can cancel the timer duration at any time.

Requirement: 🔔 is highlighted in the display.

▸ Use the — button to reset the timer duration to zero.
✔ After a few seconds, the appliance applies the change and 🔔 goes out.

9.3 Setting the cooking time

You can set the cooking time for operation of up to 23 hours 59 minutes.

Requirement: The type of heating and a temperature or setting have been set.

1. Press the ⏲ button repeatedly until I→I is highlighted on the display.
2. Use the — or + button to set the time.

Button	Default value
—	10 minutes
+	30 minutes

The cooking time can be set in one-minute increments up to one hour, and then in five-minute increments.

✔ After a few seconds, the appliance starts heating and the cooking time counts down.
✔ When the cooking time has elapsed, a signal sounds and the duration is at zero on the display.

3. Once the cooking time has elapsed:
   - Press any button to end the signal prematurely.
   - To set another cooking time, press the + button.
   - When your food is ready, switch off the appliance.

Changing the cooking time

You can change the cooking time at any time.

Requirement: I→I is highlighted in the display.

▸ Change the cooking time using the — or + button.
✔ The appliance applies the change after a few seconds.

Cancelling the cooking time

You can cancel the cooking time at any time.

Requirement: I→I is highlighted in the display.

▸ Reset the cooking time to zero using the — button.
✔ After a few seconds, the appliance applies the change and continues to heat without a cooking time.

9.4 Setting the end time

You can delay the time at which cooking is due to finish by up to 23 hours and 59 minutes.

Notes

- The end time cannot be set for types of heating with grill function.
- In order to achieve a good cooking result, do not delay the end time once the appliance is already in operation.
- Food will spoil if you leave it in the cooking compartment too long.

Requirements

- The type of heating and a temperature or setting have been set.
- A cooking time is set.

1. Press the ◷ button repeatedly until →| is highlighted in the display.
2. Press the — or + button.
✔ The display shows the calculated end time.
3. Use the — or + button to delay the end time.
✔ After a few seconds, the appliance applies the setting and the display shows the set end time.
✔ Once the calculated start time is reached, the appliance starts heating up and the cooking time counts down.
✔ When the cooking time has elapsed, a signal sounds and the duration is at zero on the display.
4. Once the cooking time has elapsed:
   – Press any button to end the signal prematurely.
   – To set another cooking time, press the + button.
   – When your food is ready, switch off the appliance.

Changing the end time

In order to achieve a good cooking result, you can only change the set end time before operation starts and the cooking time starts counting down.

Requirement: →| is highlighted on the display.

▸ Use the — or + button to delay the end time.
✔ The appliance applies the change after a few seconds.

Cancelling the end time

You can delete the set end time at any time.

Requirement: →| is highlighted on the display.

▸ Reset the end time to the current time plus the set cooking time using the — button.
✔ After a few seconds, the appliance applies the change and starts heating up. The cooking time counts down.

9.5 Setting the time on the clock

Once the appliance has been connected to the mains or following a power failure, the time flashes on the display. The time starts at "12:00". Set the current time.

Requirement: The function selector must be set to the "Off" position ○.

1. Use the — or + button to set the time.
2. Press the ◷ button.
✔ The time that is set appears in the display.

Changing the time on the clock

You can change the time on the clock at any time.

Requirement: The function selector must be set to the "Off" position ○.

1. Press the ◷ button repeatedly until ◷ is highlighted on the display.
2. Use the — or + button to change the time.
✔ The appliance applies the change after a few seconds.

10 Programmes

The programmes help you to use your appliance to prepare different dishes by selecting the optimum settings automatically.

10.1 Cookware for programmes

You should therefore use heat-resistant cookware that is suitable for temperatures up to 300 °C.

Glass or glass ceramic cookware is best. The joint should cover approx. two thirds of the cookware base. Cookware made from the following material is not suitable:

- Bright, shiny aluminium
- Unglazed clay
- Plastic or plastic handles

10.2 Programme table

The programme numbers are assigned to specific foods.

No.	Food	Tableware	Weight setting	Add liquid	Shelf position	Information
01	**Chicken, unstuffed** Ready to cook, seasoned	Roasting dish with glass lid	Chicken weight	No	2	Place in the cookware with the breast facing up
02	**Turkey breast** Whole, seasoned	Roasting dish with glass lid	Turkey breast weight	Cover the bottom of the roasting dish, and add up to 250 g vegetables if required	2	Do not sear the meat beforehand

No.	Food	Tableware	Weight setting	Add liquid	Shelf position	Information
03	**Vegetable stew** Vegetarian	Deep roasting dish with lid	Total weight	As per recipe	2	Cut vegetables that take longer to cook (e.g. carrots) into smaller pieces than vegetables that take less time to cook (e.g. tomatoes)
04	**Goulash** Diced beef or pork, with vegetables	Deep roasting dish with lid	Total weight	As per recipe	2	Place the meat at the bottom and cover with vegetables Do not sear the meat beforehand
05	**Meat loaf, fresh** Minced beef, pork or lamb	Roasting dish with lid	Weight of the joint	No	2	-
06	**Pot-roasted beef** E.g. prime rib, shoulder, rump or marinated beef roast	Roasting dish with lid	Weight of meat	Almost cover the meat with liquid	2	Do not sear the meat beforehand
07	**Beef roulades** Stuffed with vegetables or meat	Roasting dish with lid	Total weight of all of the stuffed roulades	Add stock, water or another liquid to the dish until the beef olives are almost covered	2	Do not sear the meat beforehand
08	**Leg of lamb, well-done** Boned, seasoned	Roasting dish with lid	Weight of meat	Cover the bottom of the roasting dish, and add up to 250 g vegetables if required	2	Do not sear the meat beforehand
09	**Joint of veal, lean** E.g. tenderloin or eye	Roasting dish with lid	Weight of meat	Cover the bottom of the roasting dish, and add up to 250 g vegetables if required	2	Do not sear the meat beforehand
10	**Pork neck joint** Boned, seasoned	Roasting dish with glass lid	Weight of meat	Cover the bottom of the roasting dish, and add up to 250 g vegetables if required	2	Do not sear the meat beforehand

10.3 Setting a programme

Note: After the programme starts, you can no longer change the programme and the weight.

1. Use the function selector to set Programmes.
2. The temperature selector must remain in the "Off" position ●.
3. Use the − or + button to set the required programme.
4. Press the kg button.
5. Use the − or + button to set the weight of your food.
   Always round up to the nearest weight. You can set the weight only in the intended range.
   ✔ The display shows the calculated cooking time. The duration cannot be changed.
   ✔ After a few seconds, the programme starts and the cooking time counts down.
   ✔ If the programme has ended, an audible signal sounds and the display shows the cooking time as zero.
6. When the programme ends:
   – Press any button to end the signal prematurely.

- To set a cooking time for further cooking, press the + button. The appliance will resume heating using the programme settings.
- When your food is ready, switch off the appliance.

11 Childproof lock

You can secure your appliance to prevent children from accidentally switching it on or changing the settings.

11.1 Activating and deactivating the childproof lock

Requirement: The function selector must be set to the zero setting ○.

- Press and hold the kg button until ⊶ appears on the display.
  - To deactivate the childproof lock, press and hold the kg button until ⊶ goes out in the display.

12 Basic settings

You can configure the basic settings for your appliance to meet your needs.

12.1 Overview of the basic settings

Here you can find an overview of the basic settings and factory settings. The basic settings depend on the features of your appliance.

Indicator	Basic setting	Selection
c1	Signal duration upon completion of a cooking time or timer period	1 = 10 seconds 2 = 30 seconds[1] 3 = 2 minutes
c2	Waiting time until a setting is adopted	1 = 3 seconds[1] 2 = 6 seconds 3 = 10 seconds
c3	Button tone when pressing a button	0= off 1 = on[1]
c4	Brightness of the display illumination	1 = dark 2= medium 3 = bright[1]
c5	Time display	0 = hide the time 1 = display the time[1]
c6	Childproof lock can be adjusted	0= no 1 = Yes[1] 2 = yes, with door lock
c7	Interior lighting during operation	0= no 1 = Yes[1]
c8	Cooling fan run-on time	1 = short 2= medium[1] 3 = long 4 = extra long
c9	Telescopic shelves retrofitted[2]	0 = no [1] (for rails and 1-level pull-out) 1 = yes (for 2- and 3-level pull-out)
cA	Reset all values to factory settings	0 = No[1] 1 = Yes

[1] Factory setting (may vary according to model)
[2] Depending on the appliance specifications

12.2 Changing basic settings

Requirement: The appliance is switched off.

1. Press and hold the ⏲ button for approx. 4 seconds.
✔ The first basic setting appears on the display, e.g. c1 1.

2. Use the — or + button to change the setting.
3. Use the ⏲ button to switch to the next basic setting.
4. To save the changes, press and hold the ⏲ button for approx. 4 seconds.

Note: Your changes to the basic settings will be retained even after a power cut.

Discarding changes to the basic settings

- Use the function selector to switch the appliance on and off.
- ✔ All changes are discarded and not saved.

13 Cleaning and servicing

To keep your appliance working efficiently for a long time, it is important to clean and maintain it carefully.

13.1 Cleaning products

In order to avoid damaging the various oven surfaces on the appliance, do not use unsuitable cleaning products.

⚠ **WARNING – Risk of electric shock!**

An ingress of moisture can cause an electric shock.

- Do not use steam- or high-pressure cleaners to clean the appliance.

ATTENTION!

Unsuitable cleaning products may damage the surfaces of the appliance.

- Do not use harsh or abrasive cleaning products.
- Do not use cleaning products with a high alcohol content.
- Do not use hard scouring pads or cleaning sponges.
- Do not use any special cleaners for cleaning the appliance while it is hot.

Using oven cleaner in a hot cooking compartment damages the enamel.

- Never use oven cleaner in the cooking compartment when it is still warm.
- Remove all food remnants from the cooking compartment and the appliance door before you next heat up the appliance.

New sponge cloths contain residues from production.

- Wash new sponge cloths thoroughly before use.

13.2 Suitable cleaning agents

Only use cleaning agents that are suitable for the different surfaces on your appliance.

Follow the instructions on cleaning the appliance.

Appliance front

Surface	Suitable cleaning agents	Hints
Stainless steel	■ Hot soapy waterHot soapy water ■ Special stainless steel cleaning products suitable for hot surfaces	To prevent corrosion, remove any patches of limescale, grease, starch or albumin (e.g. egg white) from stainless steel surfaces immediately. Apply a thin layer of the stainless steel cleaning product.
Plastic or painted surfaces E.g. control panel	■ Hot soapy waterHot soapy water	Do not use glass cleaner or a glass scraper.

Appliance door

Area	Suitable cleaning agents	Hints
Door panels	■ Hot soapy waterHot soapy water	Do not use a glass scraper or steel wool. **Tip:** Remove the door panels in order to clean them thoroughly. → *"Appliance door", Page 19*
Door cover	■ Made of stainless steel: Stainless steel cleaner ■ Made of plastic: Hot soapy waterHot soapy water	Do not use glass cleaner or a glass scraper. **Tip:** Remove the door cover for thorough cleaning. → *"Appliance door", Page 19*
Door handle	■ Hot soapy waterHot soapy water	To avoid permanent stains, remove descaling agents from the door handle immediately.
Door seal	■ Hot soapy water	Do not remove or scrub.

Cooking compartment

Area	Suitable cleaning agents	Hints
Enamel surfaces	▪ Hot soapy waterHot soapy water ▪ Vinegar solution ▪ Oven cleaner	Soak any heavily soiled areas and use a brush or steel wool. Leave the appliance door open to dry the cooking compartment after cleaning it. **Tip:** It is best to use the cleaning function. → *"Pyrolytic self-cleaning", Page 17* **Notes** ▪ Enamel burns at very high temperatures, causing minor discolouration. The functionality of your appliance is not affected by this. ▪ The edges of thin trays cannot be completely enamelled and may be rough. This does not impair the corrosion protection. ▪ Food residues leave a white coating on the enamel surfaces. The coating does not pose a health risk. The functionality of your appliance is not affected by this. You can remove residues with lemon juice.
Glass cover for the oven light	▪ Hot soapy waterHot soapy water	Use oven cleaner to remove very heavy soiling.
Shelf supports	▪ Hot soapy waterHot soapy water	Soak any heavily soiled areas and use a brush or steel wool. **Tip:** Remove the shelf supports for cleaning. → *"Shelf supports", Page 22*
Accessory/ies	▪ Hot soapy waterHot soapy water ▪ Oven cleaner	Soak any heavily soiled areas and use a brush or steel wool. Enamelled accessories are dishwasher-safe.

13.3 Cleaning the appliance

In order to avoid damaging the appliance, you must clean your appliance only as specified, and with suitable cleaning products.

⚠ **WARNING – Risk of burns!**
The appliance becomes hot during operation.
▸ Allow the appliance to cool down before cleaning.

⚠ **WARNING – Risk of fire!**
Loose food remnants, fat and meat juices may catch fire.
▸ Before using the appliance, remove the worst of the food residues and remnants from the cooking compartment, heating elements and accessories.

Requirement: Read the information on cleaning agents.
→ *"Cleaning products", Page 16*

1. Clean the appliance using hot soapy water and a dish cloth.
   – For some surfaces, you can use alternative cleaning agents.
   → *"Suitable cleaning agents", Page 16*
2. Dry with a soft cloth.

14 Pyrolytic self-cleaning

With the Pyrolytic self-cleaning cleaning function, the cooking compartment is cleaned virtually automatically. Use the cleaning function to clean the cooking compartment every two to three months. You can use the cleaning function more often, if required.
The cleaning function requires approx. 2.5–4.8 kilowatt hours.

14.1 Preparing the appliance for the cleaning function

In order to achieve a good cleaning result, prepare the appliance carefully.

⚠ **WARNING – Risk of fire!**
Combustible objects that are left in the cooking compartment may catch fire.
▸ Never store combustible objects in the cooking compartment.
▸ If smoke is emitted, the appliance must be switched off or the plug must be pulled out and the door must be held closed in order to stifle any flames.

Loose food remnants, fat and meat juices may catch fire when the cleaning function is in progress.
▸ Before you start the cleaning function, always remove coarse dirt from the cooking compartment.
▸ Never clean accessories at the same time.

The outside of the appliance gets very hot when the cleaning function is in progress.
- Never hang combustible objects, e.g. tea towels, on the door handle.
- Leave the front of the appliance clear.
- Keep children at a safe distance.

If the door seal is damaged, a large amount of heat is generated around the door.
- Do not scrub or remove the seal.
- Never operate the appliance if the seal is damaged or missing.

1. Remove accessories and cookware from the cooking compartment.
2. Unhook the shelf supports and remove them from the cooking compartment.
   → *"Shelf supports", Page 22*
3. Remove coarse dirt from the cooking compartment.
4. Use a detergent solution and a soft cloth to clean the surfaces at the edges of the cooking compartment around the door seal.
   Do not remove or scrub the door seal.
   Use oven cleaner to remove stubborn dirt from the inner door pane.
5. Remove any objects from the cooking compartment. The cooking compartment must be empty.

14.2 Setting the cleaning function

Ventilate the kitchen while the cleaning function is running.

⚠ **WARNING – Risk of harm to health!**
The cleaning function heats up the cooking compartment to a very high temperature so that food left over from roasting, grilling and baking will burn off. This process releases vapours, which can irritate mucous membranes.
- Keep the kitchen well ventilated while the cleaning function is running.
- Do not remain in the room for long periods.
- Keep children and pets away.

⚠ **WARNING – Risk of burns!**
The cooking compartment gets very hot when the cleaning function is in progress.
- Never open the appliance door.
- Allow the appliance to cool down.
- Keep children at a safe distance.

⚠ The outside of the appliance gets very hot when the cleaning function is in progress.
- Never touch the appliance door.
- Allow the appliance to cool down.
- Keep children at a safe distance.

Note: The oven light does not light up while the cleaning function is running.

Requirement: Prepare the appliance for the cleaning function. → *Page 17*

1. Use the function selector to set Pyrolytic self-cleaning ⊞.
2. Use the temperature selector to set the cleaning level ⊞.

Cleaning setting	Cleaning level	Duration in hours
1	Low	Approx. 1:15
2	Medium	Approx. 1:30
3	High	Approx. 2:00

   Select a higher cleaning setting if the cooking compartment is particularly dirty or has not been cleaned for a while.
   The duration cannot be changed.
   - ✔ After a few seconds, the cleaning function starts and the duration counts down.
   - ✔ For your safety, the appliance door locks once a certain temperature is reached in the cooking compartment. 🔒 appears on the display.
   - ✔ When the cleaning function ends, a signal tone sounds and the duration is at zero on the display.
3. Switch off the appliance.
   When the appliance has cooled down sufficiently, the appliance door is unlocked and 🔒 goes out.
4. Prepare the appliance for use. → *Page 18*

14.3 Preparing the appliance for use following the cleaning function

1. Allow the appliance to cool down.
2. Wipe off any ash that has been left behind in the cooking compartment and around the appliance door with a damp cloth.
3. Remove white residues with lemon juice.
   Note: White residues on the enamel surfaces may be caused by heavy soiling. These food residues are harmless. The deposits do not compromise the functionality of the appliance.
4. Attach the shelf supports.
   → *"Shelf supports", Page 22*

15 Cleaning aid

The Cleaning aid is a quick alternative for occasionally cleaning the cooking compartment. The cleaning aid softens dirt by evaporating the soapy water. It is then easier to remove the dirt.

15.1 Setting the cleaning aid

⚠ **WARNING – Risk of scalding!**
If there is water in the cooking compartment when it is hot, this may create hot steam.
- Never pour water into the cooking compartment when the cooking compartment is hot.

Requirement: The cooking compartment must have cooled down completely.

1. Remove any accessories from the cooking compartment.
2. Mix 0.4 litres water with a drop of washing-up liquid and pour into the centre of the cooking compartment floor. Close the appliance door.
   Do not use distilled water.
3. Use the function selector to set the Bottom heating type of heating.
4. Use the temperature selector to set 80 °C.
5. Press the button repeatedly until is highlighted on the display.
6. Use the − or + button to set the time to 4 minutes.
✔ After a few seconds, the appliance starts heating and the cooking time counts down.
✔ When the cooking time has elapsed, a signal sounds and the duration is at zero on the display.
7. Switch off the appliance and leave the cooking compartment to cool down for approx. 20 minutes.

15.2 Cleaning the cooking compartment after using the cleaning aid

ATTENTION!
The prolonged presence of moisture in the cooking compartment leads to corrosion.
▸ After using the cleaning assistance, wipe the cooking compartment and allow it to dry completely.

Requirement: The cooking compartment has cooled down.

1. Wipe out the remaining water in the cooking compartment using an absorbent sponge cloth.
2. Clean the smooth enamel surfaces in the cooking compartment with a dish cloth or a soft brush. Remove stubborn food remnants using a stainless steel scouring pad.
3. Remove limescale with a cloth soaked in vinegar, and wipe this away with clean water.
4. Dry the cooking compartment with a soft cloth.
5. Once the cooking compartment is sufficiently clean:
   – In order to dry the cooking compartment, leave the appliance door open in the detent position (approx. 30°) for approx. 1 hour.
   – To dry the cooking compartment quickly, heat up the appliance for approx. 5 minutes at 3D hot air and 50 °C while the door is open.

16 Appliance door

To clean the appliance door thoroughly, you can disassemble the appliance door.
Note:
Further information:

16.1 Detaching the appliance door

Note: The door handles are different depending on the appliance type.

⚠ **WARNING – Risk of injury!**
The hinges on the appliance door move when the door is opened and closed, which could trap your fingers.
▸ Keep your hands away from the hinges.
Components inside the appliance door may have sharp edges.
▸ Wear protective gloves.
When the hinges are not secured, they can snap shut with great force.
▸ Make sure that the locking levers are always either fully closed or (when detaching the oven door) fully open.

1. Open the appliance door fully
   → *"Removing the door panes", Page 20*.
2. Open the locking levers on the left- and right-hand hinges.

Locking levers opened	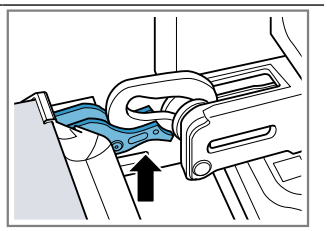 The hinge is now secured and cannot snap shut.
Locking levers closed	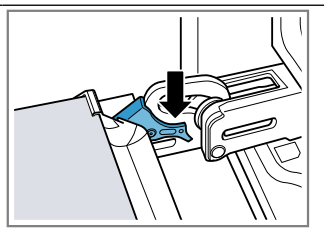 The appliance door is secured and cannot be detached.

✔ The locking levers are open. The hinges are now secured and cannot snap shut.

3. Close the appliance door fully ①. Grab hold of the appliance door with both hands (on the left and right) and pull it upwards and out ②.

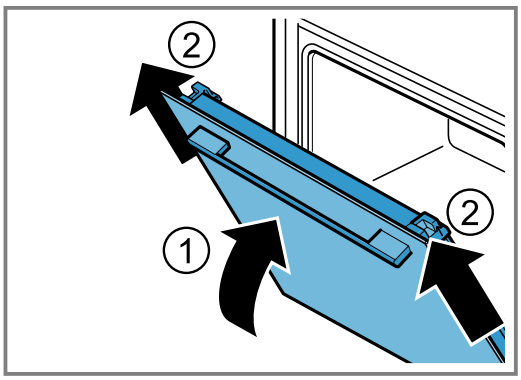

4. Carefully place the appliance door on a level surface.

16.2 Attaching the appliance door

1. ⚠ **WARNING – Risk of injury!**
The hinges on the appliance door move when the door is opened and closed, which could trap your fingers.
▸ Keep your hands away from the hinges.

When the hinges are not secured, they can snap shut with great force.
▸ Make sure that the locking levers are always either fully closed or (when detaching the oven door) fully open.

Note:
Ensure that the appliance door slides onto the hinges without any resistance.

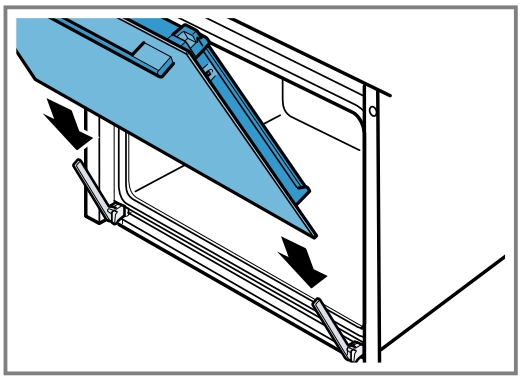

2. Use both hands to slide the appliance door on as far as it will go.

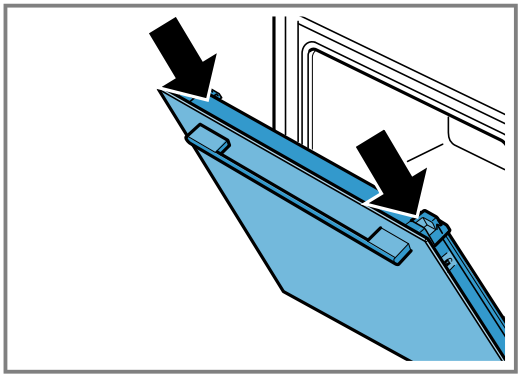

3. Open the appliance door fully.

4. Close the locking levers on the left- and right-hand hinges.

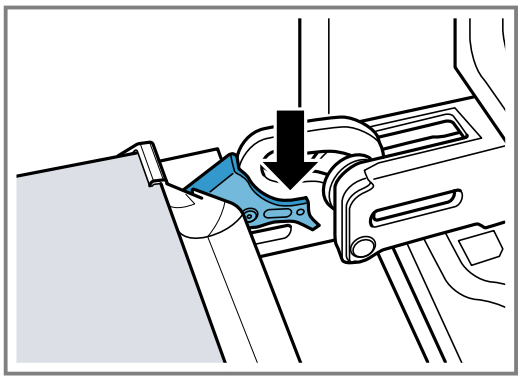

✔ The locking levers are closed. The appliance door is secured and cannot be detached.
5. Close the appliance door.

16.3 Removing the door panes

⚠ **WARNING – Risk of injury!**
The hinges on the appliance door move when the door is opened and closed, which could trap your fingers.
▸ Keep your hands away from the hinges.
Components inside the appliance door may have sharp edges.
▸ Wear protective gloves.

1. Open the appliance door fully.
2. Open the locking levers on the left- and right-hand hinges
✔ The locking levers are open. The hinges are now secured and cannot snap shut.
3. Close the appliance door fully.
4. Press on the left- and right-hand pressure surface ① until it audibly clicks.

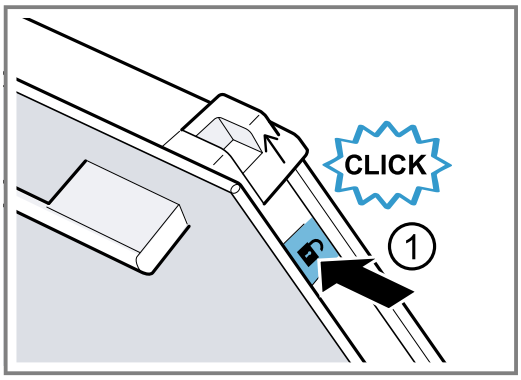

5. Push the two sliding caps upwards in the direction of the arrow ②.

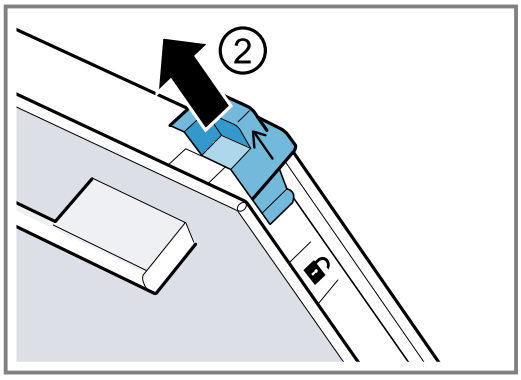

6. Remove the inner panel upwards at an angle and set it down carefully on a flat surface.
7. Open the left- and right-hand metal strip in the direction of the arrow ①.

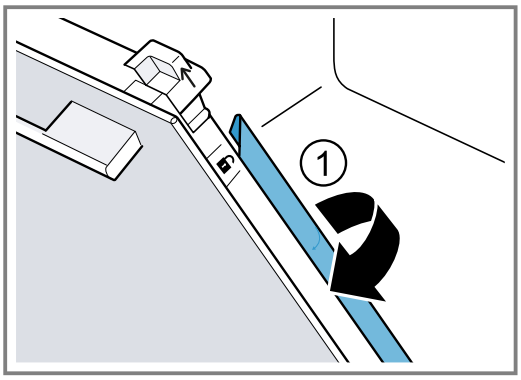

8. Pull the first and second intermediate panels upwards and out at an angle, and set them down carefully on a flat surface.

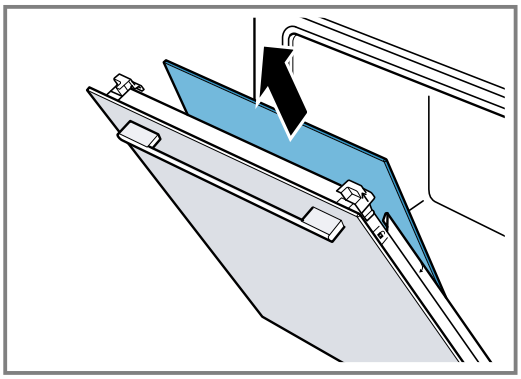

9. ⚠ **WARNING – Risk of injury!**
   Scratched glass in the appliance door may develop into a crack.
   - Do not use any harsh or abrasive cleaners or sharp metal scrapers to clean the glass on the oven door, as they may scratch the surface.

   Clean the removed door panels on both sides with glass cleaner and a soft cloth.
10. Clean the appliance door.
    → *"Suitable cleaning agents", Page 16*
11. **Note:** While the cleaning function is running, the frame on the inside of the appliance door or other parts of the door that are made of stainless steel become discoloured. This discolouration does not compromise the functionality of the appliance. The discolouration can be removed using a stainless steel cleaner.

    Dry the door panes and refit them.
    → *"Fitting the door panes", Page 21*

16.4 Fitting the door panes

⚠ **WARNING – Risk of injury!**
The hinges on the appliance door move when the door is opened and closed, which could trap your fingers.
- Keep your hands away from the hinges.

Components inside the appliance door may have sharp edges.
- Wear protective gloves.

Note:
Ensure that the arrow is on the top left on the intermediate panels.

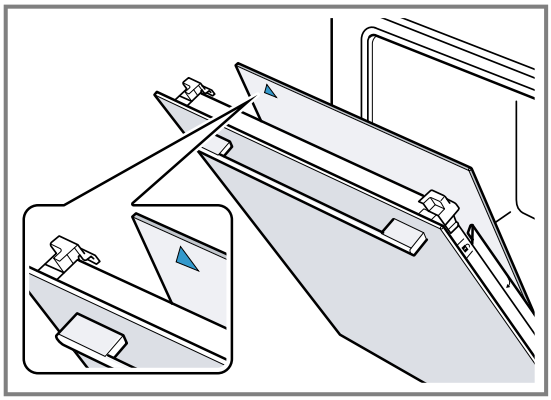

1. Slide the first intermediate panel into the lowest retainer ① and fit it at the top.

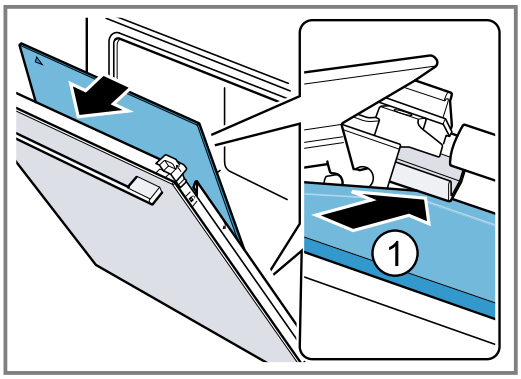

2. **Note:** The intermediate panel is automatically positioned by the rotational movement of the spacer.

   Slide the second intermediate panel into the central retainer ① and fit it at the top.

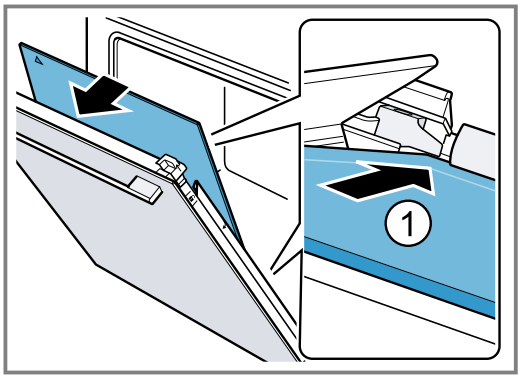

3. Close the metal strip on the left and right ①.

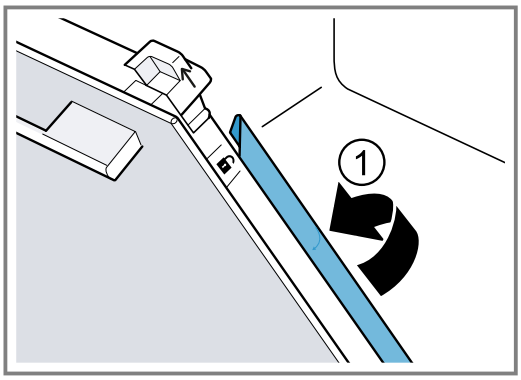

4. **Note:** The lettering "Pyro" must be legible at the top, as shown in the picture.

   Slide the inner panel into the retainer at the bottom ① and fit it at the top.

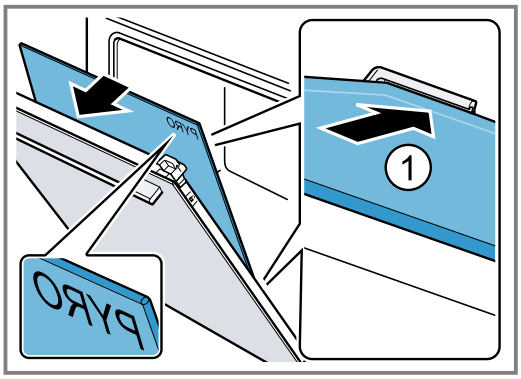

5. Push the inner panel in at the top ①. Push the sliding caps [a] downwards in the direction of the arrow.

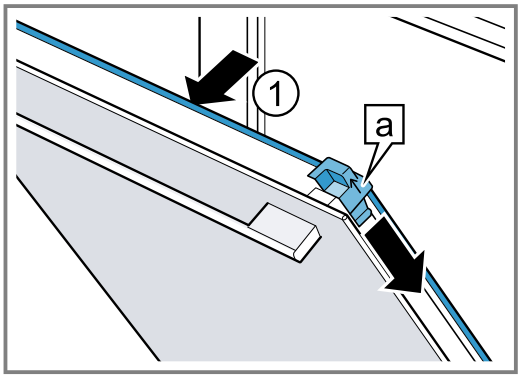

6. Open the appliance door fully.
7. Close the locking levers on the left- and right-hand hinges

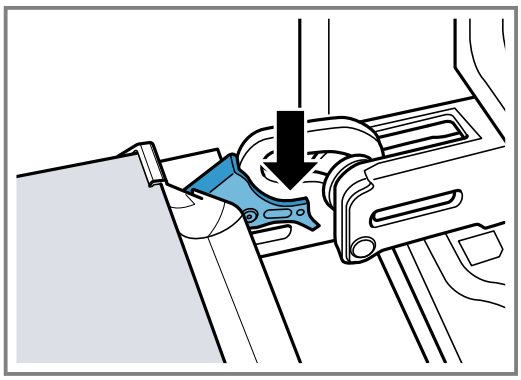

8. Close the appliance door.

Note: Do not use the cooking compartment again until the door panes have been correctly fitted.

17 Shelf supports

To clean the rails and the cooking compartment, or to replace the rails, you can remove these.

17.1 Detaching the shelf supports

⚠ **WARNING – Risk of burns!**

The shelf supports get very hot

- Never touch the shelf supports when hot.
- Always allow the appliance to cool down.
- Keep children at a safe distance.

1. Lift the rail forwards slightly ① and detach it ②.
2. Pull the whole rail to the front ③ and remove it.

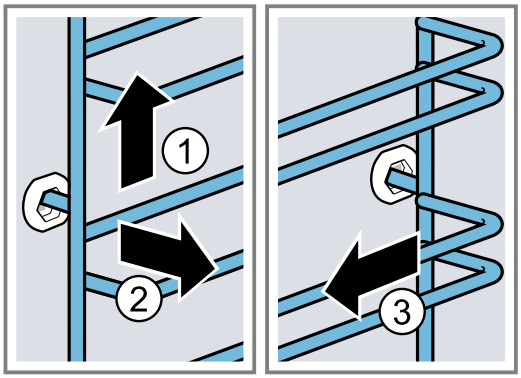

3. Clean the rail.
   → *"Cleaning products", Page 16*

17.2 Attaching the shelf supports

Note: The rails only fit on the right or left.

1. First, push the rail into the middle of the rear socket ① until the rail rests against the cooking compartment wall, and then push this back ②.
2. Push the rail into the front socket ③ until the rail also rests against the cooking compartment wall, and then press this downwards ④.

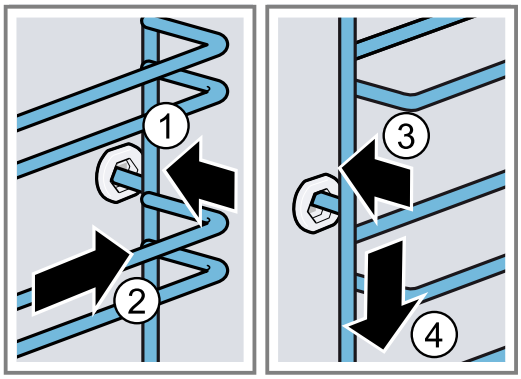

18 Troubleshooting

You can rectify minor faults on your appliance yourself. Read the troubleshooting information before contacting after-sales service. This will avoid unnecessary costs.

⚠ **WARNING – Risk of injury!**

Improper repairs are dangerous.

- Repairs to the appliance should only be carried out by trained specialist staff.
- If the appliance is defective, call Customer Service.
  → *"Customer Service", Page 24*

⚠ **WARNING – Risk of electric shock!**

Improper repairs are dangerous.

- Repairs to the appliance should only be carried out by trained specialist staff.
- Only use genuine spare parts when repairing the appliance.
- If the power cord of this appliance is damaged, it must be replaced by trained specialist staff.

18.1 Malfunctions

Fault	Cause and troubleshooting
The appliance is not working.	The circuit breaker in the fuse box has tripped. ▸ Check the circuit breaker in the fuse box.
	There has been a power cut. ▸ Check whether the lighting in your room or other appliances are working.
	Electronics fault **1.** Disconnect the appliance from the power supply for at least 30 seconds by switching off the fuse. **2.** Reset the basic settings to the factory settings. → *"Basic settings", Page 15*
The time flashes in the display.	There has been a power cut. ▸ Reset the time. → *"Setting the time on the clock", Page 13*
Appliance is not heating; the colon flashes in the display.	Demo mode is activated. **1.** Briefly disconnect the appliance from the power supply by switching the circuit breaker in the fuse box off and back on again. **2.** Deactivate demo mode within five minutes by changing the basic setting *c b* to *0*. → *"Basic settings", Page 15*
The appliance door cannot be opened; ⚿ lights up in the display.	The childproof lock locks the appliance door. ▸ Use the kg button to deactivate the childproof lock. → *"Childproof lock", Page 15*
The appliance door cannot be opened; 🔒 lights up in the display.	The cleaning function locks the appliance door. ▸ Allow the appliance to cool down until 🔒 goes out in the display.
⚿ lights up on the display and no settings can be made on the appliance.	Childproof lock is activated. ▸ Use the kg button to deactivate the childproof lock. → *"Childproof lock", Page 15*
h flashes in the display and the appliance will not start.	The cooking compartment is too hot for the selected operation. **1.** Switch off the appliance and allow it to cool down. **2.** Restart the operation.
F 8 appears in the display.	The maximum cooking time has been reached. To prevent an unwanted permanent operation, the appliance automatically stops heating after several hours if the settings are unchanged. ▸ Switch off the appliance. You can configure new settings if required. **Tip:** To prevent the appliance from switching off when you do not want it to, e.g. for an extremely long preparation time, set a cooking time. → *"Time-setting options", Page 12*

Fault	Cause and troubleshooting
A message with E appears in the display, e.g. E05-32.	Electronics fault **1.** Press the ⏲ button. – If required, reset the time. ✔ If the fault was a one-off, the error message disappears. **2.** If the error message appears again, call the after-sales service. Quote the exact error message and the E no. of your appliance. → *"Customer Service", Page 24*

18.2 Replacing the oven light bulb

If the light in the cooking compartment fails, change the oven light bulb.

Note: Heat-resistant, 40 - 43-watt, 230 V halogen bulbs are available from the after-sales service or specialist retailers. Only use these bulbs. Hold the new halogen bulbs only with a clean, dry towel. This increases the service life of the bulb.

⚠ **WARNING – Risk of burns!**

The appliance and its parts that can be touched become hot during use.

- Caution should be exercised here in order to avoid touching heating elements.
- Young children under 8 years of age must be kept away from the appliance.

⚠ **WARNING – Risk of electric shock!**

When changing the bulb, the bulb socket contacts are live.

- Before replacing the bulb, ensure that the appliance is switched off in order to prevent a potential electric shock.
- Also unplug the appliance from the mains or switch off the fuse in the fuse box.

⚠ **WARNING – Risk of injury!**

The glass cover may already have broken due to external influences or it may break due to excessive pressure when being installed or removed.

- Exercise caution when installing or removing the glass cover.
- Use gloves or a tea towel.

Requirements

- The appliance is disconnected from the power supply.
- The cooking compartment has cooled down.
- You must have a new halogen lamp to replace the old one.

1. Place a tea towel in the cooking compartment to prevent damage.
2. Turn the glass cover anti-clockwise to remove it ①.
3. Pull out the halogen bulb without turning it ②.

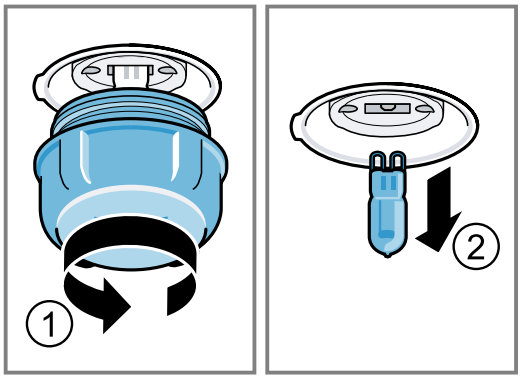

4. Insert the new halogen bulb and press it firmly into the socket.
   Make sure that the pins are positioned correctly.
5. Depending on the appliance model, the glass cover may have a sealing ring. Attach the sealing ring.
6. Screw in the glass cover.
7. Remove the tea towel from the cooking compartment.
8. Connect the appliance to the power supply.

19 Disposal

19.1 Disposing of old appliance

Valuable raw materials can be reused by recycling.

1. Unplug the appliance from the mains.
2. Cut through the power cord.
3. Dispose of the appliance in an environmentally friendly manner.
   Information about current disposal methods are available from your specialist dealer or local authority.

This appliance is labelled in accordance with European Directive 2012/19/EU concerning used electrical and electronic appliances (waste electrical and electronic equipment - WEEE).
The guideline determines the framework for the return and recycling of used appliances as applicable throughout the EU.

20 Customer Service

Detailed information on the warranty period and terms of warranty in your country is available from our after-sales service, your retailer or on our website.

If you contact Customer Service, you will require the product number (E-Nr.) and the production number (FD) of your appliance.

The contact details for Customer Service can be found in the enclosed Customer Service directory or on our website.
This product contains light sources from energy efficiency class G.

20.1 Product number (E-Nr.) and production number (FD)

You can find the product number (E-Nr.) and the production number (FD) on the appliance's rating plate.

You will see the rating plate with these numbers if you open the appliance door.

Make a note of your appliance's details and the Customer Service telephone number to find them again quickly.

21 How it works

Here, you can find the ideal settings for various types of food as well as the best accessories and cookware. We have perfectly tailored these recommendations to your appliance.

21.1 General cooking tips

Take note of the following information when cooking all types of food.

- The temperature and cooking time depend on the amount of food and the recipe. Settings ranges are specified for this reason. Try using the lower values to start with.
- The setting values apply to food placed in the cooking compartment while the cooking compartment is still cold. If you want to preheat anyway, do not place accessories into the cooking compartment until it has finished preheating.
- Remove any accessories that are not being used from the cooking compartment.

ATTENTION!
Acidic food may damage the wire rack
- ▸ Do not place acidic food, such as fruit or food with an acidic marinade directly on the wire rack.

Information for those allergic to nickel
In rare cases, small amounts of nickel may pass into the food.
You can buy suitable accessories from customer service, from specialist retailers or online.
→ *"Other accessories", Page 10*

21.2 Notes on baking

When baking, use the shelf positions indicated.

Baking on one level	Height
Deep baked goods or tin on wire rack	2
Flat baked goods or goods in a baking tray	3

Baking on two levels	Height
Universal pan	3
Baking tray	1
Baking tins on the wire rack:	**Height**
First wire rack	3
Second wire rack	1

Baking on three levels	Height
Baking tray	5
Universal pan	3
Baking tray	1

Notes
- When baking on several layers, use hot air. Baked goods that are placed in the oven at the same time will not necessarily be ready at the same time.
- Position baking tins/dishes either next to one another or offset on different shelves so that they are not directly one above the other in the cooking compartment.
- For best results, we recommend using dark-coloured metal baking tins.

21.3 Notes on roasting and grilling

The setting values are based on the assumption that unstuffed, chilled, ready-to-roast poultry, meat or fish is placed into a cold cooking compartment.
- The larger the poultry, meat or fish, the lower the cooking temperature and the longer the cooking time.
- Turn the poultry, meat or fish after approx. 1/2 to 2/3 of the time listed.
- When you turn poultry, ensure that the breast side or skin side is underneath to begin with.

Roasting and grilling on the wire rack

Roasting on the wire rack works particularly well for large poultry or for multiple pieces at the same time.
- Depending on the size and type of the food to be roasted, add up to 1/2 litre water to the universal pan.
  You can make a sauce from the juices that are collected. This also means that less smoke is produced and the cooking compartment does not become as dirty.
- Keep the appliance door closed when using the grill.
  Never grill with the appliance door open.
- Place the food to be grilled on the wire rack. In addition, slide the universal pan in at least one shelf position lower, with the slanted edge facing the appliance door. This means that any dripping fat is caught.

Roasting in cookware

When preparing food in cookware with a lid, the cooking compartment remains cleaner.
Follow the manufacturer's instructions for your roasting dishes. Glass cookware is best.

Cookware without lid

- Use a deep roasting dish.
- Place the cookware onto the wire rack.
- If you do not have any suitable cookware, use the universal pan.

Cookware with lid

- Place the cookware onto the wire rack.
- Meat, poultry and fish can also become crispy in a covered roasting dish. Use a roasting dish with a glass lid. Set a higher temperature.

⚠ **WARNING – Risk of injury!**

If hot glass cookware is placed on a wet or cold surface, the glass may shatter.

- ▸ Place hot glass ovenware on a dry mat after cooking.

⚠ **WARNING – Risk of scalding!**

Very hot steam may escape when the lid is opened after cooking. Steam may not be visible, depending on the temperature.

- ▸ Lift the lid in such a way that the hot steam can escape away from you.
- ▸ Keep children away from the appliance.

21.4 List of foods

Recommended settings for a variety of foods, sorted into food categories.

Recommended settings for various types of food

Food	Accessory/cookware	Height	Type of heating	Temperature in °C/grill setting	Cooking time in mins
Sponge cake, simple	Ring-shaped tin or Loaf tin	2		150-170	50-70
Sponge cake, simple	Ring-shaped tin or Loaf tin	2		150-160	70-90
Sponge cake, delicate (springform tin)	Ring-shaped tin or Loaf tin	2		150-170	60-80
Cake, 2 levels	Ring-shaped tin or Loaf tin	3+1		140-150	70-85
Fruit tart or cheesecake with shortcrust pastry base	Springform cake tin, diameter 26 cm.	2		170-190	55-80
Yeast cake in springform tin	Springform cake tin Ø 28 cm	2		160-170	25-35
Fatless sponge cake, 6 eggs	Springform cake tin Ø 28 cm	2		150-160[1]	30-40
Swiss roll	Universal pan	3		180-200[1]	10-15
Shortcrust tart with moist topping	Universal pan	2		160-180	55-95
Yeast cake with moist topping	Universal pan	3		180-200	30-55
Muffins	Muffin tray	2		170-190	20-40
Small yeast cakes	Universal pan	3		160-180	25-35
Small yeast cakes	Universal pan	3		160-170	25-45
Biscuits	Universal pan	3		140-160	15-25

[1] Preheat the appliance.
[2] Slide the universal pan underneath the wire rack.
[3] Turn the dish between halfway and two-thirds through the cooking time.
[4] At the start, add liquid to the cookware so that at least 2/3 of the joint is covered in liquid
[5] Slide the universal pan in underneath at shelf position 2.
[6] Turn the dish 2/3 of the way through the cooking time.
[7] Pour water into the dish so that it covers the base.
[8] Do not turn the food.

Food	Accessory/cookware	Height	Type of heating	Temperature in °C/grill setting	Cooking time in mins
Biscuits, 2 levels	Universal pan + Baking tray	3+1		140-160	15-25
Biscuits, 3 levels	Universal pan + x 2 Baking tray	5+3+1		140-160	15-25
Meringues	Universal pan	3		80-90[1]	120-150
Bread, 1000 g (in a loaf tin or free-form)	Universal pan or Loaf tin	2		**1.** 210-220[1] **2.** 180-190[1]	**1.** 10-15 **2.** 40-50
Pizza, fresh, on a baking tray	Universal pan	2		200-220	25-35
Pizza, fresh, on a baking tray	Universal pan	3		180-200	20-30
Pizza, fresh, thin-crust, on a pizza tray	Pizza tray	2		250-270[1]	15-20
Pizza, fresh, thin-crust, on a pizza tray	Pizza tray	2		250-270[1]	8-13
Quiche	Tart dish or tin or Black tray	1		210-230	30-40
Quiche	Tart dish or tin or Black tray	2		190-210	25-35
Börek	Universal pan	1		180-200	40-50
Bake, savoury, cooked ingredi-ents	Ovenproof dish	2		200-220	30-60
Chicken, 1.3 kg, unstuffed	Uncovered cookware	2		200-220	60-70
Small chicken portions, 250 g each	Uncovered cookware	3		220-230	30-35
Goose, unstuffed, 3 kg	Uncovered cookware	2		**1.** 140 **2.** 160	**1.** 130-140 **2.** 50-60
Pork loin, lean, 1 kg	Flat glass dish	2		180	90-120
Joint of pork without rind, e.g. neck, 1.5 kg	Uncovered cookware	2		160-170	130-150
Joint of pork without rind, e.g. neck, 1.5 kg	Uncovered cookware	2		190-200	120-150
Fillet of beef, medium, 1 kg[2]	Pan support + Universal pan	3		210-220	40-50[3]
Pot-roasted beef, 1.5 kg[4]	Covered cookware	2		200-220	130-150
Sirloin, medium, 1.5 kg	Pan support + Universal pan	3		200-220	60-70[3]
Burger, 3–4 cm thick[5]	Pan support	4		3	25-30[6]
Leg of lamb, boned, medium, 1.0 kg, tied[7]	Uncovered cookware	2		170-190	70-80[8]
Fish, grilled, whole, 300 g, e.g. trout[2]	Pan support	2		160-180	20-30

[1] Preheat the appliance.
[2] Slide the universal pan underneath the wire rack.
[3] Turn the dish between halfway and two-thirds through the cooking time.
[4] At the start, add liquid to the cookware so that at least 2/3 of the joint is covered in liquid
[5] Slide the universal pan in underneath at shelf position 2.
[6] Turn the dish 2/3 of the way through the cooking time.
[7] Pour water into the dish so that it covers the base.
[8] Do not turn the food.

Food	Accessory/cookware	Height	Type of heating	Temperature in °C/grill setting	Cooking time in mins
Fish, braised, whole, 300 g, e.g. trout	Covered cookware	2		170-190	30-40
Fish, braised, whole, 1.5 kg, e.g. salmon	Covered cookware	2		180-200	55-65

[1] Preheat the appliance.
[2] Slide the universal pan underneath the wire rack.
[3] Turn the dish between halfway and two-thirds through the cooking time.
[4] At the start, add liquid to the cookware so that at least 2/3 of the joint is covered in liquid
[5] Slide the universal pan in underneath at shelf position 2.
[6] Turn the dish 2/3 of the way through the cooking time.
[7] Pour water into the dish so that it covers the base.
[8] Do not turn the food.

Yoghurt

Use your appliance to make yoghurt.

Preparing yoghurt

1. Remove the accessories and shelf supports from the cooking compartment.
2. Pour the previously prepared yoghurt mixture into small containers, e.g. into cups or small jars.
3. Cover the containers with foil, e. g. with cling film.
4. Place the containers on the cooking compartment floor.
5. Set the appliance according to the recommended setting.
6. After making the yoghurt, leave it to cool in the refrigerator.

Recommended settings for desserts

Food	Accessory/cookware	Height	Type of heating	Temperature in °C	Cooking time in mins
Yoghurt	Individual moulds	Cooking compartment floor		40-45	8-9 hrs
Yoghurt	Individual moulds	Cooking compartment floor		40-45	8-9 hrs

21.5 Test dishes

Baking

- The setting values apply to food that is placed into a cold cooking compartment.
- Take note of the information on preheating in the recommended settings tables. These setting values apply without rapid heat-up.
- For baking, use the lower of the temperatures indicated first.
- Items that are placed in the appliance on baking trays or in baking tins/dishes at the same time will not necessarily be ready at the same time.
- Shelf positions when baking on 2 levels:
  - Universal pan: Shelf position 3
    Baking tray: Shelf position 1
  - Baking tins on the wire rack:
    First wire rack: Shelf position 3
    Second wire rack: Shelf position 1
- Shelf positions when baking on 3 levels:
  - Baking tray: Shelf position 5
  - Universal pan: Shelf position 3
  - Baking tray: Shelf position 1
- Hot water sponge cake
  - When baking on 2 levels, place the springform tins each in the centre of the wire racks.
  - As an alternative to a pan support, you can also use the Air Fry baking tray offered by us.

Recommended settings for baking

Food	Accessory/cookware	Height	Type of heating	Temperature in °C	Cooking time in mins
Shortbread	Universal pan	3		140-150[1]	25-35
Shortbread	Universal pan	3		140[1]	28-38

[1] Preheat the appliance for five minutes. Do not use the rapid heating function.
[2] Preheat the appliance. Do not use the rapid heating function.

Food	Accessory/cookware	Height	Type of heating	Temperature in °C	Cooking time in mins
Viennese whirls, 2 levels	Universal pan + Baking tray	3+1		140[1]	30-40
Viennese whirls, 3 levels	Universal pan + x 2 Baking tray	5+3+1		130-140[1]	35-55
Small Cakes	Universal pan	3		150[1]	25-35
Small Cakes	Universal pan	3		150[1]	20-30
Small Cakes	Universal pan	3		170	20-30
Small Cakes, 2 levels	Universal pan + Baking tray	3+1		150[1]	25-35
Small Cakes, 3 levels	Universal pan + x 2 Baking tray	5+3+1		140[1]	30-40
Hot water sponge cake	Springform cake tin, diameter 26 cm.	2		160-170[2]	25-35
Hot water sponge cake	Springform cake tin, diameter 26 cm.	2		160-170	30-40
Hot water sponge cake, 2 levels	Springform cake tin, diameter 26 cm.	3+1		150-160[2]	35-50
Apple Pie, 2 x	x 2 20 cm springform cake tin	2		180-190	75-90

[1] Preheat the appliance for five minutes. Do not use the rapid heating function.
[2] Preheat the appliance. Do not use the rapid heating function.

Grilling

Recommended settings for grilling

Food	Accessory/cookware	Height	Type of heating	Temperature in °C/grill setting	Cooking time in mins
Toasting bread	Pan support	5		3[1]	5-6

[1] Do not preheat the appliance.

22 Installation instructions

Observe this information when installing the appliance.

22.1 General installation instructions

Follow these instructions before you start installing the appliance.

- The safe operation of this appliance can only be guaranteed if it has been installed to a professional standard in accordance with these installation instructions. The installer shall be liable for damages incurred as a result of incorrect installation.
- Check the appliance for damage after unpacking it. Do not connect the appliance if it has been damaged in transit.
- Before starting up the appliance, remove any packaging material and adhesive film from the cooking compartment and the door.
- Proceed in accordance with the installation sheets for installing accessories.

- Fitted units must be heat-resistant up to 95 °C, and adjacent unit fronts up to 70 °C.
- Do not install the appliance behind a decorative door or the door of a kitchen unit. There is a risk of overheating.
- Cut-out work on the units should be carried out before installing the appliance. Remove any shavings. Otherwise, the correct operation of electrical components may be adversely affected.
- Position the appliance on a horizontal surface.
- The mains socket for the appliance must either be located in the hatched area a or outside of the area where the appliance is installed.
  Any unsecured units must be secured to the wall using a standard bracket b.

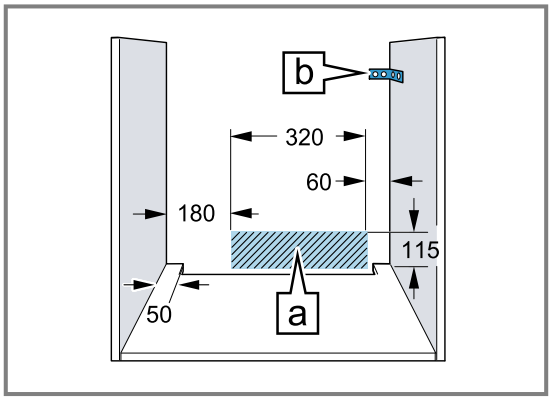

- Wear protective gloves so that you do not cut yourself. Parts that are accessible during installation may have sharp edges.
- Dimensions of the figures in mm.

⚠ WARNING – Risk of fire!

It is dangerous to use an extended power cord and non-approved adapters.

- ▸ Do not use extension cables or multiple socket strips.
- ▸ Only use adapters and power cords approved by the manufacturer.
- ▸ If the power cord is too short and a longer one is not available, please contact an electrician to have the domestic installation adapted.

ATTENTION!

Carrying the appliance by the door handle could break it. The door handle cannot support the weight of the appliance.

- ▸ Do not carry or hold the appliance by the door handle.

22.2 Appliance dimensions

You will find the dimensions of the appliance here

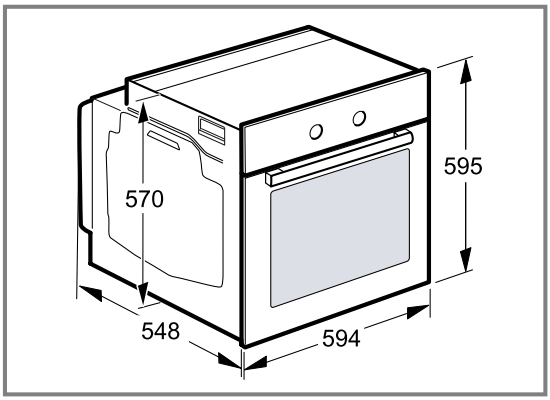

22.3 Installation below a worktop

Observe the installation dimensions and the installation instructions when installing below a worktop.

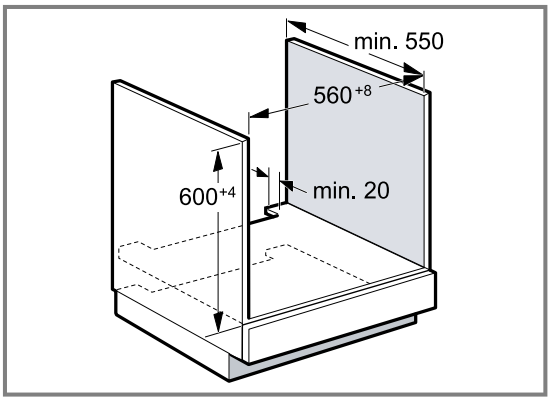

- To ventilate the appliance, the intermediate floor must have a ventilation cut-out.
- In combination with induction hobs, the gap between the worktop and appliance must not be sealed using additional strips.
- The worktop must be secured to the fitted unit.
- Observe any available installation instructions for the hob.
- Observe different national installation instructions for the hob.

22.4 Installation in a tall unit

Observe the installation dimensions and the installation instructions when installing in a tall unit.

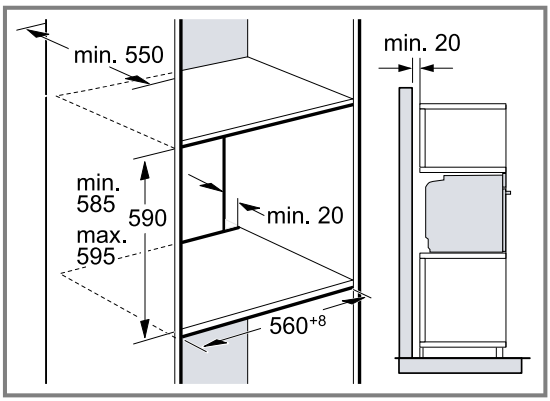

- To ventilate the appliance, the intermediate floors must have a ventilation cut-out.
- If the tall unit has another back panel in addition to the element back panels, this must be removed.
- Only fit the appliance up to a height which allows accessories to be easily removed.

22.5 Installing two appliances on top of each other

Your appliance can also be installed above or below another appliance. Observe the installation dimensions and the installation instructions when installing appliances on top of each other.

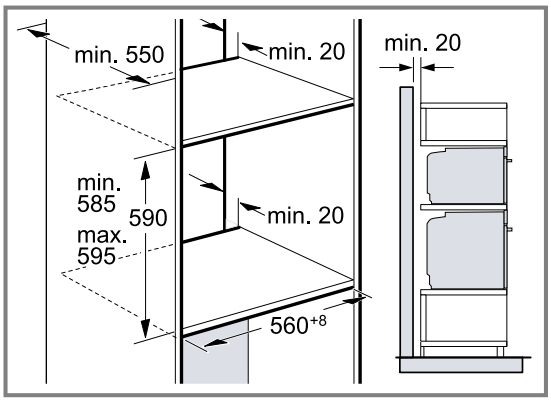

- To ventilate the appliances, the intermediate floor must have a ventilation cut-out.
- To ensure sufficient ventilation of the two appliances, there must be a ventilation opening of at least 200 cm² in the base area. To do this, trim the base panel or fit a ventilation grille.
- Ensure that air exchange is guaranteed in accordance with the diagram.

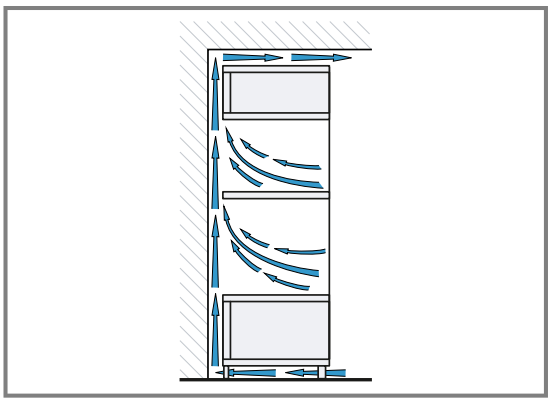

- Only fit appliances up to a height that allows accessories to be easily removed.

22.6 Corner installation

Observe the installation dimensions and the installation instructions when installing in a corner.

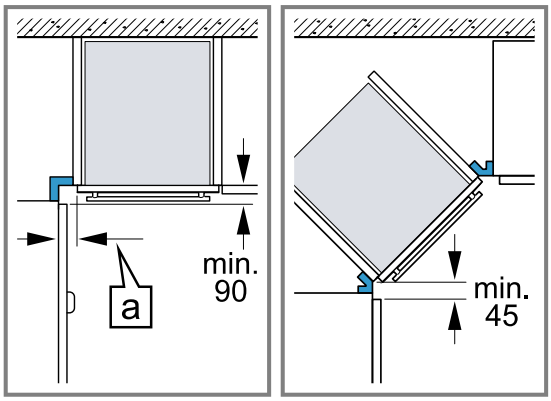

- To ensure that the appliance door can be opened, you must take the minimum dimensions into consideration when installing in a corner. The dimension a is dependent on the thickness of the unit front and the handle.

22.7 Electrical connection

In order to safely connect the appliance to the electrical system, follow these instructions.

- The appliance corresponds to protection class I and must only be operated with a protective earth connection.
- The fuse protection must correspond to the power rating specified on the appliance's rating plate and to the local regulations.
- The appliance must be disconnected from the power supply whenever installation work is being carried out.
- The appliance must only be connected using the power cable provided.
- The power cable must be plugged in at the rear of the appliance until you hear a clicking sound. A 3 m power cable can be obtained from customer service.

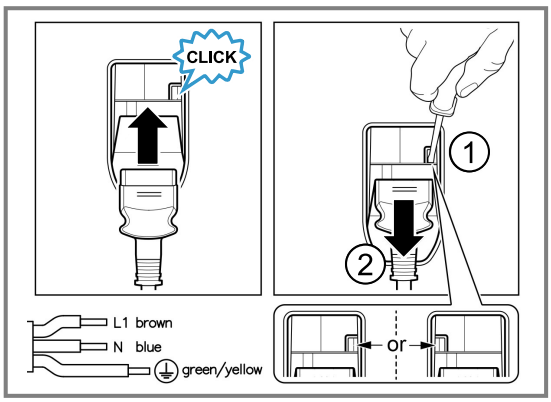

- The power cable must only be replaced with a cable from the original manufacturer. This is available from after-sales service.
- Contact protection must be guaranteed by the installation.

Electrically connect the appliance with the protective contact plug

Note: The appliance must only be connected to a protective contact socket that has been correctly installed.

- Insert the plug into the protective contact socket. When the appliance is installed, the mains plug of the power cord must be freely accessible. If free access is not possible, an isolating switch must be integrated into the permanent electrical installation according to the installation regulations.

Electrically connecting an appliance without a protective contact plug

Note: Only licensed specialists may connect the appliance. Damage caused by incorrect connection is not covered under the warranty.
An isolating switch must be integrated into the permanent electrical installation according to the installation regulations.

1. Identify the phase and neutral conductors in the socket.
   The appliance may be damaged if it is not connected correctly.
2. Connect the hob in accordance with the connection diagram.
   See the rating plate for the voltage.
3. Connect the wires of the mains power cable according to the colour coding:
   - Green/yellow = Protective conductor ⏚
   - Blue = Neutral conductor
   - Brown = Phase (external conductor)

22.8 Installing the appliance

1. Slide the appliance in fully and centre it.

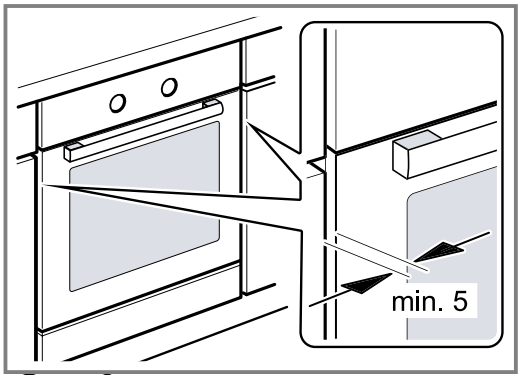

2. Screw the appliance into place.

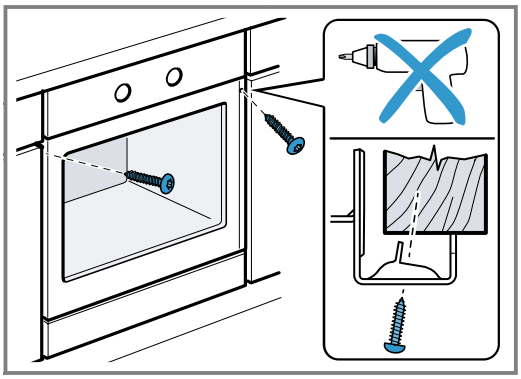

Note: The gap between the worktop and the appliance must not be closed by additional battens.

Thermal insulation strips must not be fitted to the side panels of the surround unit.

22.9 For handleless kitchens with vertical bar handle strips:

1. Attach a suitable filling piece on both sides in order to cover any sharp edges and to guarantee safe installation.

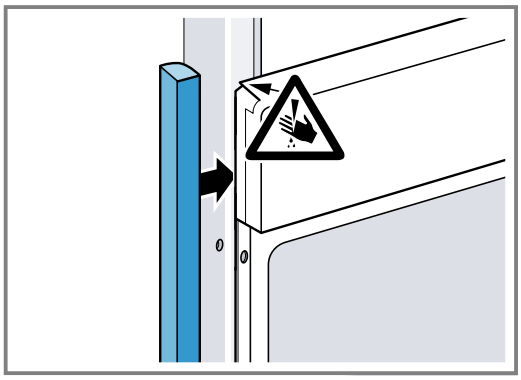

2. Secure the filling piece to the unit.
3. Pre-drill the filling piece and the unit to establish a screw connection.

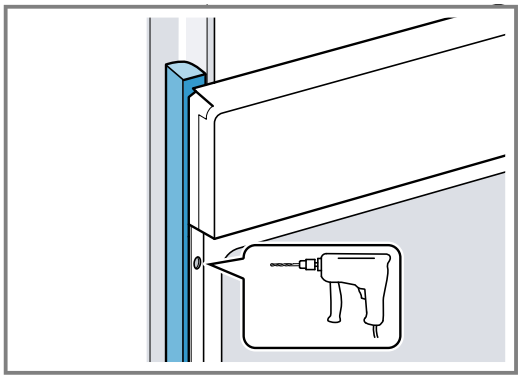

4. Secure the appliance using a suitable screw.

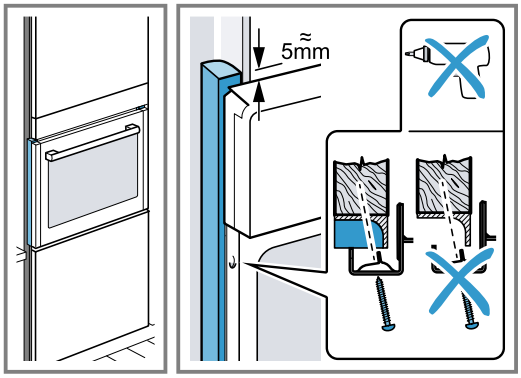

22.10 Removing the appliance

1. Disconnect the appliance from the power supply.
2. Undo the fastening screws.
3. Lift the appliance slightly and pull it out completely.

Thank you for buying a Bosch Home Appliance!

Register your new device on MyBosch now and profit directly from:

- **Expert tips & tricks for your appliance**
- **Warranty extension options**
- **Discounts for accessories & spare-parts**
- **Digital manual and all appliance data at hand**
- **Easy access to Bosch Home Appliances Service**

Free and easy registration – also on mobile phones:
www.bosch-home.com/welcome

Looking for help? You'll find it here.

Expert advice for your Bosch home appliances, help with problems or a repair from Bosch experts.
Find out everything about the many ways Bosch can support you:
www.bosch-home.com/service
Contact data of all countries are listed in the attached service directory.

BSH Hausgeräte GmbH
Carl-Wery-Straße 34
81739 München, GERMANY
www.bosch-home.com

A Bosch Company

9001949125 (040806)
en

Valid within Great Britain:
Imported to Great Britain by
BSH Home Appliances Ltd.
Grand Union House
Old Wolverton Road
Wolverton, Milton Keynes
MK12 5PT
United Kingdom