BOSCH

Hob

PKE6...17.
PKM6..BB..

PKE6..BB..
PKK6..B1..

PKF6...17.
PKK6..BB..

PKF6..BB..
PKN6...17.

PKM6..B17.
PKN6..BB..

[en] User manual and installation instructions

Bosch BetterFood app

Discover your new appliance with a thousand flexible recipes!

- Vegan, low-carb or gluten-free? You can adapt all the recipes to your preferences.
- Discover recipes for the ingredients you already have at home.
- Healthy cooking made easy thanks to the Nutri-Check health compass.
- Get the optimum settings for your connected appliances in recipes.

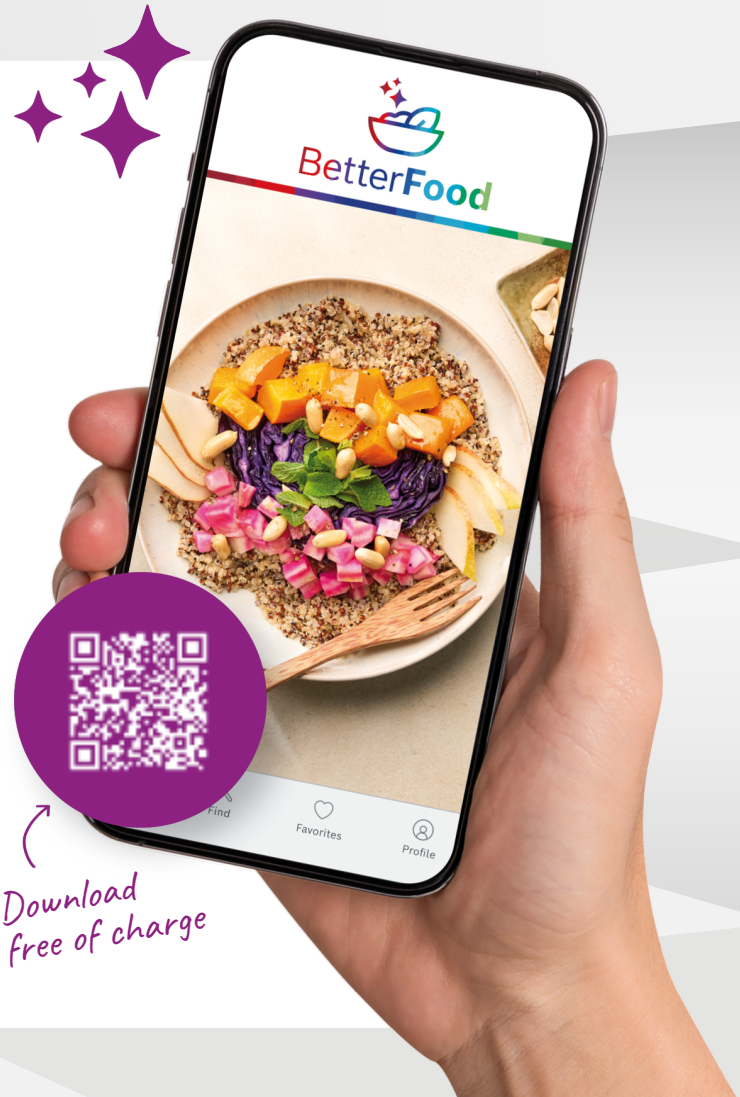

This app is only available in certain European countries and languages.

PKE6...17.., PKE6..BB..

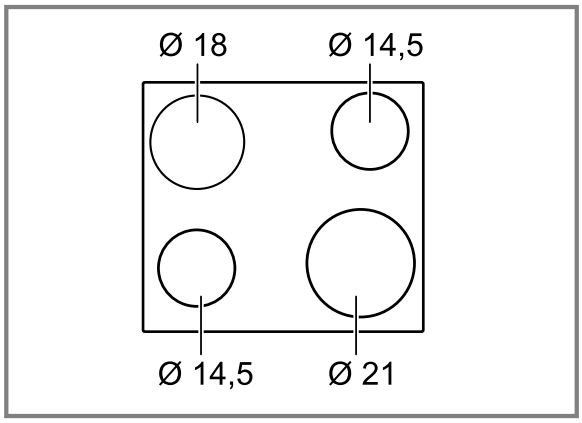

PKF6...17., PKF6..BB..

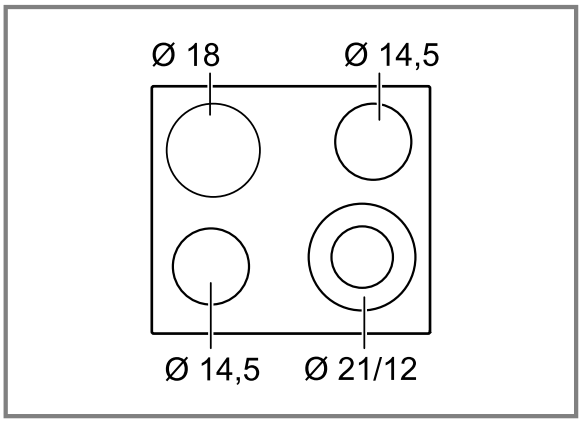

PKM6..B17., PKM6..BB..

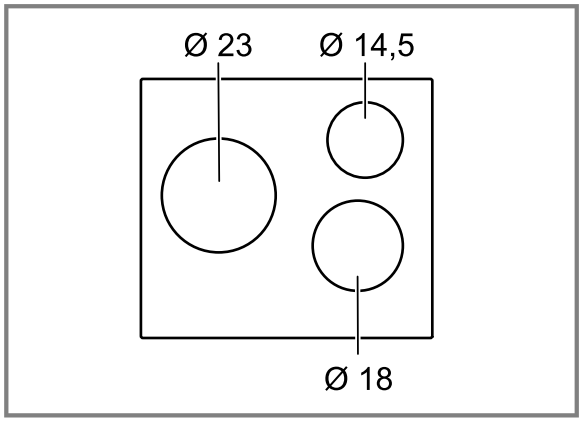

PKK6..B1.., PKK6..BB..

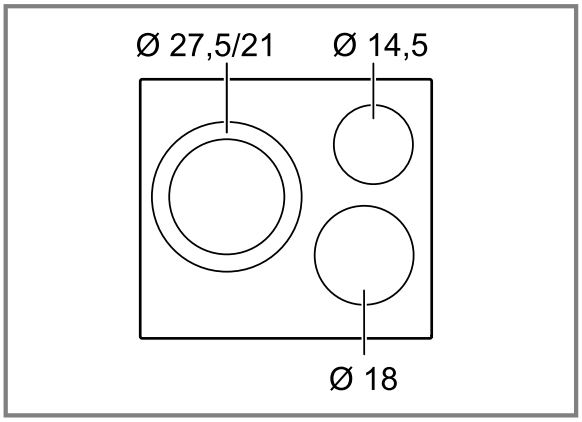

PKN6...17., PKN6..BB..

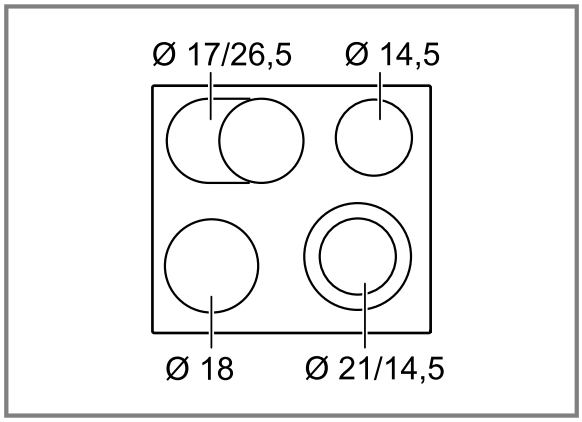

Ø = cm

You can find additional information and explanations online.
Scan the QR code on the title page.

Table of contents

INFORMATION FOR USE

1 Safety 3
2 Preventing material damage 4
3 Environmental protection and saving energy 5
4 Familiarising yourself with your appliance 5
5 Basic operation 7
6 Childproof lock 9
7 Time-setting options 9
8 Automatic switch-off 10
9 Basic settings 10
10 Cleaning and servicing 11
11 Troubleshooting 11
12 Disposal 12
13 Customer Service 13

14 INSTALLATION INSTRUCTIONS 13
14.1 Safe installation 13

⚠ 1 Safety

Observe the following safety instructions.

1.1 Definition of the signal words

This is where you can find explanations for the safety signal words used in this manual.

⚠ WARNING
This indicates that death or serious injuries may occur as a result of non-observance of this warning.

ATTENTION
This indicates that damage to the appliance or other material damage may occur as a result of non-compliance with this warning.

Note: This alerts you to important information.

1.2 General information

- Read this instruction manual carefully.
- Keep the instructions, the appliance and the product information safe for future reference or for the next owner.
- Do not connect the appliance if it has been damaged in transit.

1.3 Intended use

Only a licensed professional may connect appliances without plugs. Damage caused by incorrect connection is not covered under the warranty.

Only use this appliance:
- To prepare meals and drinks.
- Under supervision. Never leave the appliance unattended when cooking for short periods.
- in private households and in enclosed spaces in a domestic environment.
- Up to an altitude of 2000 m above sea level.

Do not use the appliance:
- With an external timer or a separate remote control. This does not apply if operation with appliances included in EN 50615 is switched off.

1.4 Restriction on user group

This appliance may be used by children aged 8 or over and by people who have reduced physical, sensory or mental abilities or inadequate experience and/or knowledge, provided that they are supervised or have been instructed on how to use the appliance safely and have understood the resulting dangers.
Do not let children play with the appliance.
Children must not perform cleaning or user maintenance unless they are at least 15 years old and are being supervised.
Keep children under the age of 8 years away from the appliance and power cable.

1.5 Safe use

⚠ WARNING – Risk of fire!
Leaving fat or oil cooking on an unattended hob can be dangerous and may lead to fires.
▸ Never leave hot oil or fat unattended.

- Never attempt to extinguish a fire using water; instead, switch off the appliance and then cover with a lid or a fire blanket.

The cooking surface becomes very hot.

- Never place flammable objects on the cooking surface or in its immediate vicinity.
- Never place objects on the cooking surface.

The appliance will become hot.

- Do not keep combustible objects or aerosol cans in drawers directly underneath the hob.

Hob covers can cause accidents, for example due to overheating, catching fire or materials shattering.

- Do not use hob covers.

Food may catch fire.

- The cooking process must be monitored. A short process must be monitored continuously.

⚠ WARNING – Risk of burns!

The appliance and its parts that can be touched become hot during use, particularly the hob surround, if fitted.

- Caution should be exercised here in order to avoid touching heating elements.
- Young children under 8 years of age must be kept away from the appliance.

Hob guards may cause accidents.

- Never use hob guards.

The appliance becomes hot during operation.

- Allow the appliance to cool down before cleaning.

The cookware handles may become hot during operation. If the handles are illuminated by the heating zone, the handles may become particularly hot.

- Always cover the entire heating zone with the cookware.
- Use oven mitts.

⚠ WARNING – Risk of electric shock!

Improper repairs are dangerous.

- Repairs to the appliance should only be carried out by trained specialist staff.
- Only use genuine spare parts when repairing the appliance.
- If the power cord of this appliance is damaged, it must be replaced by trained specialist staff.

If the appliance or the power cord is damaged, this is dangerous.

- Never operate a damaged appliance.
- If the surface is cracked, you must switch off the appliance in order to prevent a possible electrical shock. To do this, switch off the appliance via the fuse in the fuse box rather than at the main switch.
- Call customer service. →*Page 13*

An ingress of moisture can cause an electric shock.

- Do not use steam- or high-pressure cleaners to clean the appliance.

The insulation on cables of electrical appliances may melt if it touches hot parts of the appliance.

- Never bring electrical appliance cables into contact with hot parts of the appliance.

⚠ WARNING – Risk of injury!

Saucepans may suddenly jump due to liquid between the saucepan base and the hotplate.

- Always keep hotplates and saucepan bases dry.

⚠ WARNING – Risk of suffocation!

Children may put packaging material over their heads or wrap themselves up in it and suffocate.

- Keep packaging material away from children.
- Do not let children play with packaging material.

Children may breathe in or swallow small parts, causing them to suffocate.

- Keep small parts away from children.
- Do not let children play with small parts.

2 Preventing material damage

ATTENTION

Rough pot and pan bases will scratch the ceramic.

- Check your cookware.

Boiling pans dry may damage cookware or the appliance.

- Never place empty pans on a heated hotplate or allow to boil dry.

Incorrectly positioned cookware can cause the appliance to overheat.

- Never place hot pots or pans on the controls or the hob surround.

Damage can occur if hard or pointed objects fall onto the hob.

- Do not let hard or pointed objects fall onto the hob.

Non heat-resistant materials will melt on heated hotplates.
- Do not use oven protective foil.
- Do not use aluminium foil or plastic containers.

2.1 Overview of the most common damage

Here you can find the most common types of damage and tips on how to avoid them.

Damage	Cause	Measure
Stains	Food boiling over	Remove boiled-over food immediately with a glass scraper.
Stains	Unsuitable cleaning products	Only use cleaning products that are suitable for glass ceramic.
Scratches	Salt, sugar or sand	Do not use the hob as a work surface or storage space.
Scratches	Rough pot or pan bases	Check your cookware.
Discolouration	Unsuitable cleaning products	Only use cleaning products that are suitable for glass ceramic.
Discolouration	Pan abrasion, e.g. aluminium	Lift pots and pans to move on the hob.
Blisters	Sugar or food with a high sugar content	Remove boiled-over food immediately with a glass scraper.

3 Environmental protection and saving energy

3.1 Disposing of packaging

The packaging materials are environmentally compatible and can be recycled.
- Sort the individual components by type and dispose of them separately.

3.2 Saving energy

If you follow these instructions, your appliance will use less energy.

Select the cooking zone to match the size of your pan. Centre the cookware on the hob.

Use cookware whose base diameter is the same diameter as the hotplate.
Tip: Cookware manufacturers often give the upper diameter of the saucepan. It is often larger than the base diameter.
- ✔ Unsuitable cookware or incompletely covered cooking zones consume a lot of energy.

Cover saucepans with suitable lids.
- ✔ Cooking without a lid consumes considerably more energy.

Lift lids as infrequently as possible.
- ✔ When you lift the lid, a lot of energy escapes.

Using a glass lid
- ✔ You can see into the pan through a glass lid without having to lift it.

Use pots and pans with flat bases.
- ✔ Uneven bases increase energy consumption.

Use cookware that is suitable for the quantity of food.
- ✔ Large items of cookware containing little food need more energy to heat up.

Cook with only a little water.
- ✔ The more water there is in the cookware, the more energy that is required to heat it up.

Turn down to a lower power level early on.
- ✔ If you use an ongoing power level that is too high, you will waste energy.

Take advantage of the hob's residual heat. With longer cooking times switch off the hotplate 5-10 minutes before the end of cooking.
- ✔ Unused residual heat increases energy consumption.

4 Familiarising yourself with your appliance

The instruction manual is the same for various different hobs. You can find the hob dimensions in the overview of models. → *Page 2*

4.1 Control panel

You can use the control panel to configure all functions of your appliance and to obtain information about the operating status.

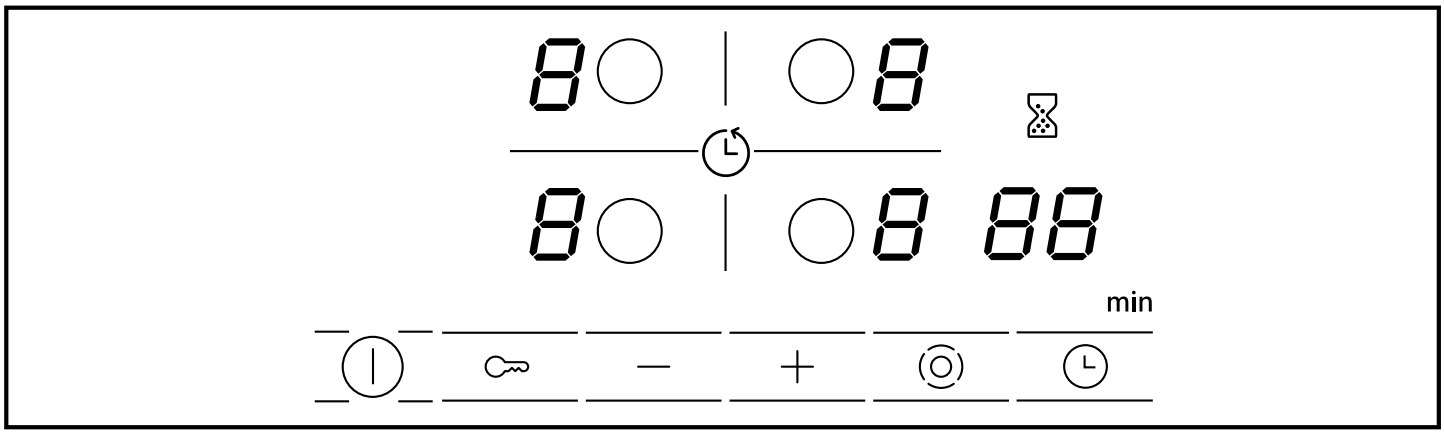

4.2 Indicators/symbols

The displays show selected values and functions.

Display	Name
1 - 9	Heat settings
H / h	Residual heat
8 8	Timer

4.3 Touch fields

Touch fields are touch-sensitive surfaces. To select a function, touch the relevant field.

Touch field	Name
⏻	Main switch
○	Hotplate selection
⊂⊃	Childproof lock
− +	Adjustment fields
◎	Automatic zone control
◷	Timer

Notes

- Always keep the control panel dry. Moisture impairs the function.
- Do not pull pans close to the displays and touch fields. The electronics may overheat.

4.4 Hotplates

You can find an overview of the different activations of the hotplates here.
If you operate the activations, the relevant displays light up.
If you switch on a hotplate, it will switch to the setting last selected.

Hotplate	Name	Activating and deactivating
○	Single-circuit cooking zone	Select a hotplate.
◎	Dual-circuit hotplate	Select a hotplate. Touch ◎.
⊂⊃	Extended cooking zone	Select hotplate. Touch ◎.

Notes

- Dark areas in the glow pattern of the hotplate are part of the technical design. They do not affect the functionality of the hotplate.
- The hotplate regulates the temperature by switching the heat on and off. The heat may also switch on and off when at the highest setting.
- With multi-circuit hotplates, the heating of the hotplate and the activated areas may switch on or off at different times.
- Reasons:
  - Easily damaged components are protected against overheating.
  - The appliance is protected against electrical overload.
  - This achieves a better cooking result.

4.5 Residual heat indicator

The hob has a two-stage residual heat indicator for each hotplate. Do not touch the hotplate while the residual heat indicator is lit up.

Display	Meaning
H	The hotplate is so hot that you can keep small dishes warm or melt cooking chocolate.
h	The hotplate is hot.

5 Basic operation

5.1 Switching the hob on or off

The main switch is used to switch the hob on and off. If you switch the appliance back on again within 4 seconds after switching off, the hob will start up with the previously stored settings.

5.2 Switching on the hob

- ▸ Touch ⏻.
- ✔ The indicator lamp above ⏻ lights up.
- ✔ The 0 displays light up.
- ✔ The hob is ready for use.

5.3 Switching off the hob

The hob will switch off automatically when all hotplates have been switched off for a while (10-60 seconds).

- ▸ Touch ⏻.
- ✔ The indicator lamp above ⏻ goes out.
- ✔ The displays go out.
- ✔ All hotplates are switched off.
- ✔ The residual heat indicator remains on until the hotplates have cooled down sufficiently.

5.4 Setting the hotplates

To set a hotplate, it has to be selected.
Select the required heat setting on the control panel.

Heat setting	
1	Lowest setting
9	Highest setting
.	Every heat setting has an intermediate setting, e.g. 4. .

5.5 Selecting heat settings

Requirement: The hob is switched on.

1. Select the hotplate with ○.
   ✔ 0 lights up on the power level display.
2. Within the next 10 seconds, touch + or −.

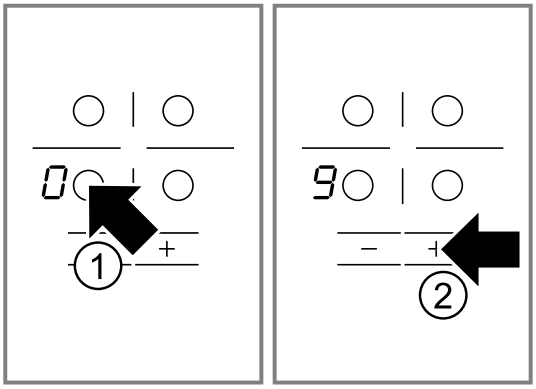

The basic setting appears.
- + Power level 9
- − Power level 4

5.6 Changing heat settings

1. Select the hotplate with ○.
2. Touch + or − until the required heat setting appears.

5.7 Switching off the hotplate

There are 2 ways to switch off the hotplate.

1. Touch ○ twice.
   ✔ 0 appears on the heat setting display.
   ✔ After approx. 10 seconds the residual heat indicator appears.
2. Select the hotplate and touch + or − until 0 appears on the heat setting display.
   ✔ After approx. 10 seconds the residual heat indicator appears.

Note: The hotplate last selected remains activated. You can adjust the hotplate without selecting it again.

5.8 Recommended cooking settings

You can find an overview of different foods with appropriate power levels here.
The cooking time varies depending on the type, weight, thickness and quality of the food. The ongoing power level depends on the cookware used.

Cooking tips

- To bring food to the boil, use heat setting 9.
- Stir thick liquids occasionally.
- Food that needs to be seared quickly or that initially loses a lot of liquid during frying should be fried in small portions.
- Tips for saving energy when cooking. →*Page 5*

Melting

Food	Ongoing cooking setting	Ongoing cooking time in minutes
Chocolate, cooking chocolate	1-1.	-
Butter, honey, gelatine	1-2	-
Heating or keeping warm		
Stew, e.g. lentil stew	1-2	-
Milk [1]	1.-2.	-
Sausages in water [1]	3-4	-
Defrosting and heating		
Spinach, frozen	2.-3.	10-20
Goulash, frozenGoulash, frozen	2.-3.	20-30

[1] Prepare the dish without the lid.

Poaching or simmering

Dumplings [1,2]	4.-5.	20-30
Fish [1,2]	4-5	10-15
White sauce, e.g. béchamel	1-2	3-6
Whisked sauces, e.g. sauce béarnaise or hollandaise	3-4	8-12

Boiling, steaming or stewing

Rice with double the volume of water	2-3	15-30
Rice pudding	1.-2.	35-45
Potatoes boiled in their skin	4-5	25-30
Boiled potatoes	4-5	15-25
Pasta, noodles [1,2]	6-7	6-10
Stew, soup	3.-4.	15-60
Vegetables, fresh	2.-3.	10-20
Vegetables, frozen	3.-4.	10-20
Food in a pressure cooker	4-5	-

Braising

Roulades	4-5	50-60
Pot roast	4-5	60-100
Goulash	2.-3.	50-60

Frying with little oil
Fry food without a lid.

Escalope, plain or breaded	6-7	6-10
Escalope, frozen	6-7	8-12
Chops, plain or breaded [3]	6-7	8-12
Steak, 3 cm thick	7-8	8-12
Patties, 3 cm thick [3]	4.-5.	30-40
Hamburgers, 2 cm thick [3]	6-7	10-20
Poultry breast, 2 cm thick [3]	5-6	10-20
Poultry breast, frozen [3]	5-6	10-30
Fish or fish fillet, plain	5-6	8-20
Fish or fish fillet, breaded	6-7	8-20
Fish or fish fillet, breaded and frozen, e.g. fish fingers	6-7	8-12
Scampi, prawns	7-8	4-10
Vegetables or mushrooms, fresh, sautéing	7-8	10-20
Vegetables or meat in strips cooked Asian-style	7.-8.	15-20
Stir fry, frozen	6-7	6-10
Pancakes	6-7	one by one
Omelette	3.-4.	one by one
Fried eggs	5-6	3-6

Deep-frying
Deep-fry food in 1–2 l oil in batches, 150–200 g per batch. Cook food without a lid.

Frozen products, e.g. chips or chicken nuggets	8-9	-
Croquettes, frozen	7-8	-
Meat, e.g. chicken	6-7	-
Fish, breaded or battered	5-6	-
Vegetables or mushrooms, breaded or battered Tempura	5-6	-
Small pastries, e.g. doughnuts, fruit in batter	4-5	-

[1] Bring the water to the boil with the lid on.
[2] Continue to cook the dish without a lid.
[3] Turn the dish several times.

6 Childproof lock

You can use the childproof lock to prevent children from switching on the hob.

6.1 Activating the childproof lock

Requirement: The hob is switched off.
- ▸ Press and hold ⊶ for approx. 4 seconds.
- ✔ The indicator light above ⊶ lights up for 10 seconds.
- ✔ The hob is locked.

6.2 Deactivating the childproof lock

- ▸ Press and hold ⊶ for approx. 4 seconds.
- ✔ The lock is released.

6.3 Automatic childproof lock

This function automatically activates the childproof lock when you switch off the hob.
The automatic childproof lock can be activated in the basic settings. →*Page 10*

7 Time-setting options

Your appliance has different time-setting options which can be used to set a cooking time or a kitchen timer.

7.1 Cooking time

Enter a cooking time for the relevant hotplate. When the cooking time has elapsed, the hotplate switches off automatically.
You can set a cooking time of up to 99 minutes.

Setting the cooking time

Requirement: The hotplate is selected.
1. Select the power level.
2. Touch ◷.
- ✔ The indicator light for the hotplate lights up at ◷. 00 lights up on the timer display.
3. Touch + or −.

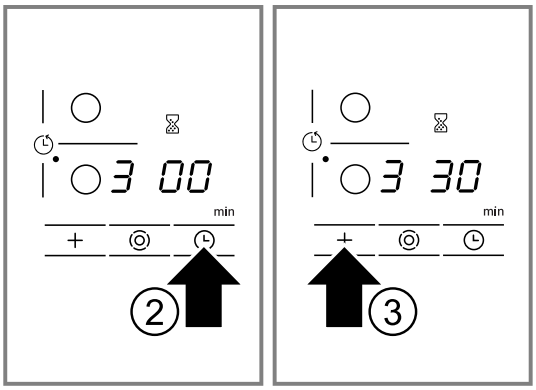

The default value appears.
- + 30 minutes.
- − 10 minutes.

- ✔ The cooking time counts down. If you have set a cooking time for more than one hotplate, the cooking time of the hotplate selected is displayed.
- ✔ When the cooking time has elapsed, the hotplate switches off. A signal sounds and 00 flashes on the display for 10 seconds.

Changing or cancelling the cooking time

1. Select the cooking zone.
2. Touch ◷.
3. Change the cooking time using + or − or set to 00.

Switching off the continuous signal

You can switch the signal off manually.
- ▸ Touch any symbol.
- ✔ The displays will go out and the audible signal will stop.

Automatic timer

You can use this function to preselect a cooking time for all hotplates. Each time a hotplate is switched on, the preselected cooking time counts down. When the cooking time has elapsed, the hotplate switches off automatically.
Switch on the automatic timer in the basic settings. →*Page 10*

Tip: The automatic timer is valid for all hotplates. You can reduce or delete the cooking time for individual hotplates. →*Page 9*

7.2 Kitchen timer

You can set a time of up to 99 minutes after which a signal will then sound. The kitchen timer runs independently of all other settings.

Setting the kitchen timer

1. Switch on the kitchen timer.
   There are 2 different ways of switching the kitchen timer on.

If a hotplate has been selected.	Touch ◷ twice within 10 seconds.
If a hotplate has not been selected.	Touch ◷.

- ✔ The ⌛ display lights up.
2. Use + or − to set the time.
- ✔ The time counts down.
- ✔ When the time has elapsed, a signal sounds. 00 lights up on the timer display. The display switches off after 10 seconds.

Displaying the time

- ▸ Select the kitchen timer with ◷.
- ✔ The time is displayed for 10 seconds.

Setting the correct time

1. Select the kitchen timer with ◷.
2. Set the required time with + or −.

Switching off the timer signal

You can switch the signal off manually.

- Touch any touch field.
- ✔ The display goes out and the audible signal ceases.

8 Automatic switch-off

If you do not change the settings of a hotplate for a long time, automatic switch-off will be activated.
When the hotplate switches off depends on the heat setting selected (1 to 10 hours).
The heat to the hotplate is switched off. F8 and the residual heat indicator H/h flash alternately on the hotplate display.

8.1 Continuing cooking after automatic switch-off

1. Touch any touch field.
- ✔ The display goes out.
2. Reset.

9 Basic settings

You can configure the basic settings for your appliance to meet your needs.

9.1 Overview of the basic settings

You can find an overview of the basic settings and the default factory settings here.

Display	Selection
c1	Automatic childproof lock 0 – Switched off [1] 1 – Switched on 2 – Manual and automatic childproof lock are switched off.
c2	Signal tone 0 – Confirmation signal and operating error signal are switched off. The main switch signal remains switched on. 1 – Only the operating error signal is switched on. 2 – Only the confirmation signal is switched on. 3 – Confirmation signal and operating error signal are switched on. [1]
c5	Automatic timer 00 - Switched off. [1] 1-99 - Cooking time after which the hotplates switch off.
c6	Duration of the timer end signal 1 – 10 seconds. [1] 2 – 30 seconds. 3 – 1 minute.
c7	Activation of the heating elements 0 – Switched off 1 – Switched on 2 – The last setting before switching off the hotplate. [1]
c9	Time for selecting hotplates 0 – Unlimited: The last hotplate selected can always be adjusted without having to select it again. [1] 1 – You can adjust the last hotplate selected within 10 seconds after selecting it. After this time you have to select the hotplate again before adjusting it.
c0	Resetting to the factory settings 0 – Switched off. [1] 1 – Switched on.

9.2 Changing basic settings

Requirement: The hob is switched off.

1. Switch on the hob.
2. Within the next 10 seconds, press and hold ⊂⊃ for 4 seconds.

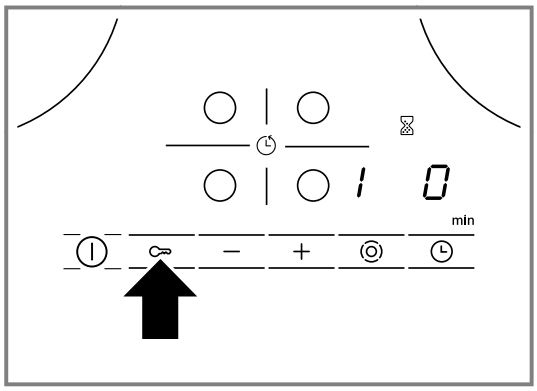

- ✔ c and 1 light up alternately as well as 0 as a preset value.
3. Touch ⊂⊃ repeatedly until the required function is displayed.

[1] Factory setting

4. Use + or − to set the required value.

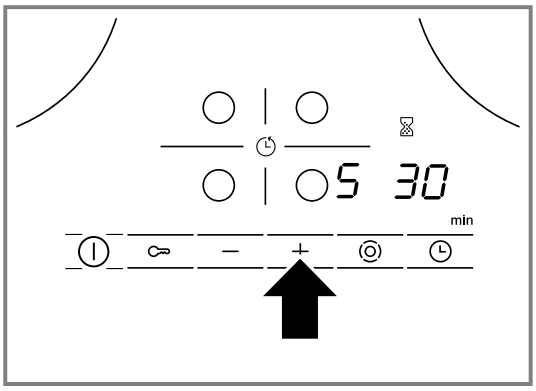

5. Press and hold ⊶ for 4 seconds.
✔ The setting is activated.

Tip: To exit the basic settings without saving, switch off the hob using ①. Switch the hob on again and reset.

10 Cleaning and servicing

10.1 Cleaning products

You can obtain suitable cleaning products and glass scrapers from customer service, the online shop or a retailer.

ATTENTION
Unsuitable cleaning products may damage the surfaces of the appliance.
- Never use unsuitable cleaning products.

Unsuitable cleaning products
- Undiluted detergent
- Detergent intended for dishwashers
- Abrasive cleaners
- Aggressive cleaning products such as oven spray or stain remover
- Abrasive sponges
- High-pressure or steam jet cleaners

10.2 Cleaning the glass ceramic

Clean the hob after every use to stop cooking residues from getting burnt on.

Note: Note the information on unsuitable cleaning products. → *Page 11*

Requirement: The hob has cooled down.
1. Remove heavy soiling using a glass scraper.
2. Clean the hob with a cleaning product for glass ceramic.
   Follow the cleaning instructions on the product packaging.
   Tip: You can achieve good cleaning results using a special sponge for glass ceramic.

10.3 Cleaning the hob surround

Clean the hob frame after use if dirty or stained.

Notes
- Note the information on unsuitable cleaning products. → *Page 11*
- Do not use the glass scraper.

1. Clean the hob frame with hot soapy water and a soft cloth.
   Wash new sponge cloths thoroughly before use.
2. Dry with a soft cloth.

11 Troubleshooting

You can rectify minor faults on your appliance yourself. Read the troubleshooting information before contacting after-sales service. This will avoid unnecessary costs.

⚠ **WARNING – Risk of injury!**
Improper repairs are dangerous.
- Repairs to the appliance should only be carried out by trained specialist staff.
- If the appliance is defective, call Customer Service.
  → *"Customer Service", Page 13*

⚠ **WARNING – Risk of electric shock!**
Improper repairs are dangerous.
- Repairs to the appliance should only be carried out by trained specialist staff.
- Only use genuine spare parts when repairing the appliance.
- If the power cord of this appliance is damaged, it must be replaced by trained specialist staff.

⚠ **WARNING – Risk of burns!**
The hotplate heats up but the display does not work.
- Switch off the fuse in the fuse box.

- Call the customer service.

⚠ **WARNING – Risk of fire!**
The hob switches off automatically and can no longer be operated. It may switch on unintentionally at a later point.
- Switch off the fuse in the fuse box.
- Call the customer service.

11.1 Information on display panel

Fault	Cause and troubleshooting
None	There has been a power cut. **1.** Check the household fuse for the appliance. **2.** Check whether there has been a power failure by trying other electrical appliances.
All displays flash	The control panel is wet or objects are lying on it. - Dry the control panel or remove the object.
F2	Several hotplates have been used over a prolonged period at high power settings. The hotplate has been switched off to protect the electronics. **1.** Wait a while. **2.** Touch any touch field. ✔ When the message no longer appears, the electronics have cooled down sufficiently. You can continue to cook.
F 4	Despite being switched off by F2, the electronics have become hot again. All hotplates have therefore been switched off. **1.** Wait a while. **2.** Touch any touch field. ✔ When the message no longer appears, the electronics have cooled down sufficiently. You can continue to cook.
F 5 and the heat setting flash alternately. A signal sounds.	Hot pot near the control panel. There is a risk that the electronics will overheat. - Remove the pan. ✔ The display goes out shortly afterwards.
F5 and audible signal	Hot pot near the control panel. The hotplate has been switched off to protect the electronics. **1.** Remove the pot. **2.** Wait a while. **3.** Touch any touch field. ✔ When the message no longer appears, the electronics have cooled down sufficiently. You can continue to cook.
F 8	The hotplate was on for too long and has switched off automatically. You can switch the hotplate back on again immediately.
dE and hotplates do not heat up	Demo mode is activated. **1.** Disconnect the appliance from the power supply for 30 seconds by briefly switching off the circuit breaker in the fuse box. **2.** Touch any touch field within the next three minutes.
A message with "E" appears on the display, e.g. E0111.	The electronics have detected a fault. **1.** Switch the appliance off and on again. ✔ If the fault was a one-off, the message disappears. **2.** If the message appears again, call the after-sales service. Please specify the exact error message when calling. → *"Customer Service", Page 13*

12 Disposal

12.1 Disposing of old appliance

Valuable raw materials can be reused by recycling.

- Dispose of the appliance in an environmentally friendly manner.
  Information about current disposal methods are available from your specialist dealer or local authority.

This appliance is labelled in accordance with European Directive 2012/19/EU concerning used electrical and electronic appliances (waste electrical and electronic equipment - WEEE).

The guideline determines the framework for the return and recycling of used appliances as applicable throughout the EU.

13 Customer Service

Function-relevant genuine spare parts according to the corresponding Ecodesign Directive can be obtained from Customer Service for a period of at least 10 years from the date on which your appliance was placed on the market within the European Economic Area. Furthermore, our Customer Service will continue to provide you with other function-relevant and storable genuine spare parts for up to 15 years from the date on which your appliance was placed on the market.
For more information, please contact our Customer Service team.

Note: Under the terms of the manufacturer's warranty the use of Customer Service is free of charge.

Detailed information about the warranty period and the warranty conditions in your country is available via the QR code on the enclosed document on service contacts and warranty conditions, from our customer service or on our website.

You can find the contact details for our customer service via the QR code on the enclosed document on service contacts and warranty conditions or on our website. You can find the information required as per Regulations (EU) 66/2014 and (EU) 2023/826 online at *www.bosch-home.com* on the product and service pages for your appliance, in the area of user manuals and additional documents.

13.1 Product number (E-Nr.) and production number (FD)

If you contact Customer Service, you will require the product number (E-Nr.) and the production number (FD), which you can find on the appliance's rating plate.

The rating plate can be found:
- on the appliance certificate.
- on the lower section of the hob.

Make a note of your appliance's details and the Customer Service telephone number to find them again quickly.

14 Installation instructions

Observe this information when installing the appliance.

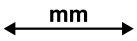

14.1 Safe installation

Follow these safety instructions when installing the appliance.

- Electrical connection must only be carried out by licensed specialist staff. Incorrect connection will invalidate the warranty.
- The safe operation of this appliance can only be guaranteed if it has been installed to a professional standard in accordance with these installation instructions. The installer shall be liable for any damage resulting from incorrect installation.

14.2 Built-under

Do not install refrigerators, dishwashers, non-ventilated ovens or washing machines underneath the appliance.

- If you fit an oven below the appliance, the worktop must be at least 20 mm thick, in certain cases even thicker. Observe the information in the oven installation instructions.
- Make sure that projecting parts such as the mains housing or the mains cable do not collide, e.g. with a drawer.

14.3 Intermediate floor

If the underside of the hob can be touched, an intermediate floor must be fitted.

- Ask your specialist retailer for an intermediate floor as an accessory.
- If you use your own intermediate floor, the minimum distance to the mains connection of the appliance must be 10 mm.

14.4 Preparing the units

The worktop must be level, horizontal and stable.

- The fitted units, including wall finishing strips, must be heat-resistant to at least 90 °C.
- Niche cladding within 50 mm of the back wall must not be combustible (e.g. tiles, stone).

- Seal the cut surfaces to make them heat-resistant. This prevents the worktop from swelling as a result of moisture.

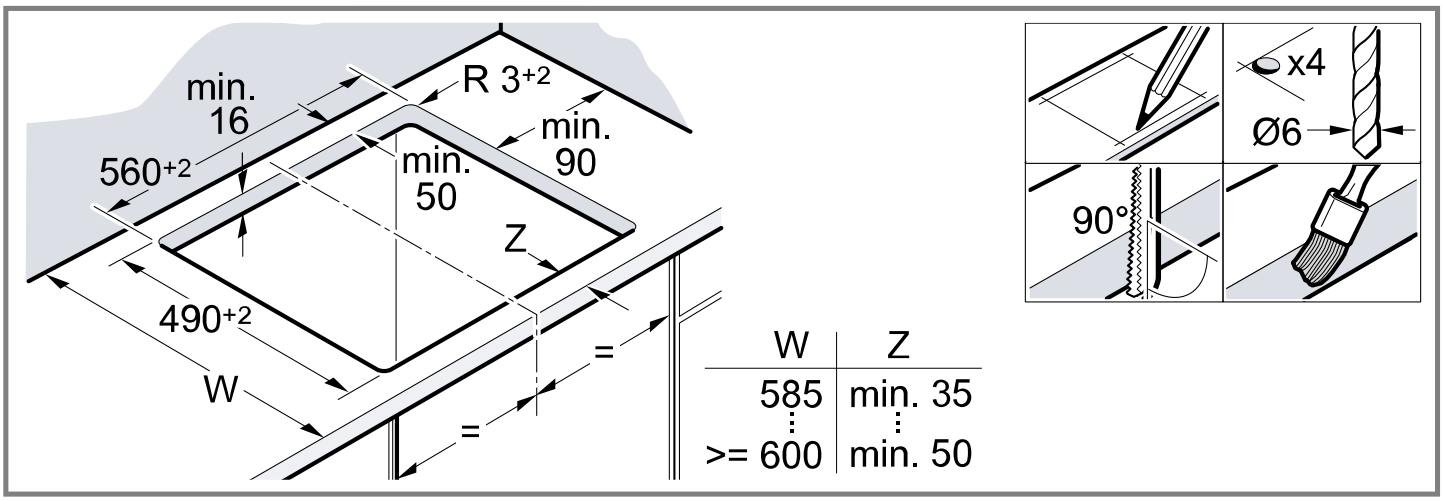

14.5 Electrical connection

To protect the device, only remove the device from the styrofoam shells when you press the device into the cut-out. Never place the device upright on one side of the device.

- Check the household wiring before connecting the appliance.
- The appliance fulfils the requirements of protection class I and must only be operated in conjunction with an earth conductor.
- In the permanent electrical installation, a partition must be provided in the phases in accordance with the installation regulations.
- If U400 appears on the appliance's display, it has not been connected correctly. Disconnect the appliance from the mains and check the connection.

Connecting with a 3-wire cable

Ensure that there is sufficient fuse protection for the household wiring.
Observe the colour coding of the power cable.

- The protective conductor is green/yellow ⏚.
  The neutral conductor is blue.
  The phase (external conductor) is brown.
  If required, the cable must be replaced with a multi-phase power cable. When replacing the cable, observe the following paragraph.

Connecting without a pre-installed cable

Only connect the hob in accordance with the connection diagram.

- If required, install the enclosed copper bridges.
- The power cable must correspond to type H05 VV-F or a higher rating.
- Use the current load to determine which wire cross-section you require. A cross-section of < 1.5 mm² is not permitted.

Connecting with a pre-installed 5-wire power cable

The power cable must only be replaced by trained customer service personnel.

14.6 Installing the hob

Do not trap the power cable and do not route it over sharp edges.

- If the oven is a built-under type, route the cable along the rear corners of the oven to the mains socket.

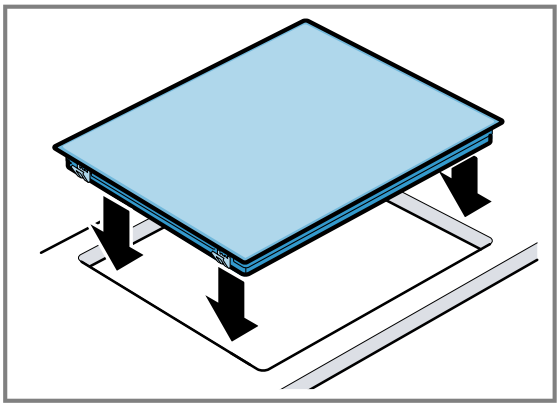

- The hob can also be installed in an existing cut-out that has a depth of 500 mm.

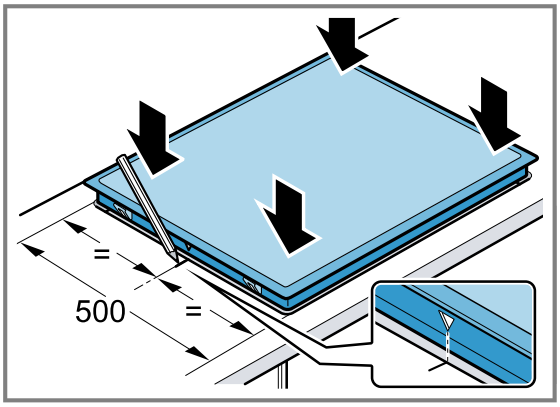

14.7 Removing the hob

1. Disconnect the appliance from the power supply.
2. Push out the hob from below.

Many thanks for choosing a Bosch home appliance!

Register your new appliance now on MyBosch and benefit directly from:

- **Expert advice and tips to make the most of your appliance**
- **Options for warranty extension**
- **Discounts on spare parts and accessories**
- **Digital information for use and all appliance data to hand**
- **Easy access to Bosch Home Appliance Service**

Simple to register, free of charge – including on mobile devices:
www.bosch-home.com/welcome

Need some help? You can find it here.

Expert advice on your Bosch home appliances, help with problems or repairs by professionals from Bosch.

Discover all the different ways Bosch can assist you:
www.bosch-home.com/service

The contact details of all countries are listed in the attached service directory.

BSH Hausgeräte GmbH
Carl-Wery-Straße 34
81739 München, GERMANY
www.bosch-home.com

A Bosch Company

Valid within Great Britain:
Imported to Great Britain by
BSH Home Appliances Ltd.
Grand Union House
Old Wolverton Road
Wolverton, Milton Keynes
MK12 5PT
United Kingdom

9001920765 (060323) REG25
en