BOSCH

Register your new device on MyBosch now and get free benefits:
bosch-home.com/welcome

MyBosch

Induction hob

PWP...BB..

[en] User manual and installation instructions

Further information and explanations are available online:

Table of contents

INFORMATION FOR USE

1 **Safety** ... 2
2 **Avoiding material damage** ... 4
3 **Environmental protection and saving energy** ... 5
4 **Suitable cookware** ... 5
5 **Familiarising yourself with your appliance** ... 7
6 **Basic operation** ... 7
7 **CombiZone** ... 9
8 **Time-setting options** ... 9
9 **PowerBoost** ... 9
10 **Childproof lock** ... 10
11 **Basic settings** ... 10
12 **Cookware test** ... 11
13 **Cleaning and servicing** ... 11
14 **Troubleshooting** ... 12
15 **Disposal** ... 13
16 **Customer Service** ... 13
17 **Test dishes** ... 13

18 **INSTALLATION INSTRUCTIONS** ... 15
18.1 **General information** ... 15

18.2 **Safe installation** ... 15

1 Safety

Observe the following safety instructions.

1.1 General information

- Read this instruction manual carefully.
- Keep the instructions, the appliance and the product information safe for future reference or for the next owner.
- Do not connect the appliance if it has been damaged in transit.

1.2 Intended use

Only a licensed professional may connect appliances without plugs. Damage caused by incorrect connection is not covered under the warranty.
The appliance can only be used safely if it is correctly installed according to the safety instructions. The installer is responsible for ensuring that the appliance works perfectly at its installation location.
Only use this appliance:

- To prepare meals and drinks.
- Under supervision. Never leave the appliance unattended when cooking for short periods.
- in private households and in enclosed spaces in a domestic environment.
- up to an altitude of max. 4000 m above sea level.

Do not use the appliance:

- With an external timer or a separate remote control. This does not apply if operation with appliances included in EN 50615 is switched off.

If you wear an active implantable medical device (e.g. a pacemaker or defibrillator), check with your doctor that it complies with Council Directive 90/385/EEC of 20th June 1990, EN 45502-2-1 and EN 45502-2-2, and that it has been chosen, implanted and programmed in accordance with VDE-AR-E 2750-10. If these conditions are satisfied, and if, in addition, non-metal cooking utensils and cookware with non-metal handles are used, it is safe to use this induction hob as intended.

1.3 Restriction on user group

This appliance may be used by children aged 8 or over and by people who have reduced physical, sensory or mental abilities or inadequate experience and/or knowledge, provided that they are supervised or have been instructed on how to use the appliance safely and have understood the resulting dangers.
Do not let children play with the appliance.

Children must not perform cleaning or user maintenance unless they are at least 15 years old and are being supervised.
Keep children under the age of 8 years away from the appliance and power cable.

1.4 Safe use

⚠ WARNING – Risk of fire!

Leaving fat or oil cooking on an unattended hob can be dangerous and may lead to fires.
- Never leave hot oil or fat unattended.
- Never attempt to extinguish a fire using water; instead, switch off the appliance and then cover with a lid or a fire blanket.

The cooking surface becomes very hot.
- Never place flammable objects on the cooking surface or in its immediate vicinity.
- Never place objects on the cooking surface.

The appliance will become hot.
- Do not keep combustible objects or aerosol cans in drawers directly underneath the hob.

Hob covers can cause accidents, for example due to overheating, catching fire or materials shattering.
- Do not use hob covers.

After every use, switch off the hob using the main switch.
- Do not wait until the hob turns off automatically as there are no longer any pots and pans on it.

Food may catch fire.
- The cooking process must be monitored. A short process must be monitored continuously.

⚠ WARNING – Risk of burns!

The appliance and its parts that can be touched become hot during use, particularly the hob surround, if fitted.
- Caution should be exercised here in order to avoid touching heating elements.
- Young children under 8 years of age must be kept away from the appliance.

Hob protective grilles may cause accidents.
- Never use hob protective grilles.

The appliance becomes hot during operation.
- Allow the appliance to cool down before cleaning.

Metal objects on the hob quickly become very hot.
- Never place metal objects (such as knives, forks, spoons and lids) on the hob.

⚠ WARNING – Risk of electric shock!

Incorrect repairs are dangerous.
- Repairs to the appliance should only be carried out by trained specialist staff.
- Only use genuine spare parts when repairing the appliance.
- If the power cord of this appliance is damaged, it must be replaced with a special connection cable, which is available from the manufacturer or his Customer Service.

If the appliance or the power cord is damaged, this is dangerous.
- Never operate a damaged appliance.
- If the surface is cracked, you must switch off the appliance in order to prevent a possible electrical shock. To do this, switch off the appliance via the fuse in the fuse box rather than at the main switch.
- Never pull on the power cord to unplug the appliance. Always unplug the appliance at the mains.
- If the appliance or the power cable is damaged, immediately switch off the fuse in the fuse box.
- Call customer services. → *Page 13*

An ingress of moisture can cause an electric shock.
- Do not use steam- or high-pressure cleaners to clean the appliance.

The insulation on cables of electrical appliances may melt if it touches hot parts of the appliance.
- Never bring electrical appliance cables into contact with hot parts of the appliance.

If metallic objects come into contact with the fan that is located on the underside of the hob, this may cause an electric shock.
- Do not store long, pointed metallic objects in the drawers below the hob.

⚠ WARNING – Risk of injury!

Saucepans may suddenly jump due to liquid between the saucepan base and the hotplate.
- Always keep hotplates and saucepan bases dry.
- Never use icy-cold cookware that has been in the freezer.

When cooking in a bain marie, the hob and cooking container could shatter due to overheating.

- The cooking container in the bain marie must not directly touch the bottom of the water-filled pot.
- Only use heat-resistant cookware.

An appliance with a cracked or broken surface can cause cuts.

- Do not use the appliance if it has a cracked or broken surface.

⚠ **WARNING – Risk of suffocation!**

Children may put packaging material over their heads or wrap themselves up in it and suffocate.

- Keep packaging material away from children.
- Do not let children play with packaging material.

Children may breathe in or swallow small parts, causing them to suffocate.

- Keep small parts away from children.
- Do not let children play with small parts.

2 Avoiding material damage

This is where you can find the most common causes of damage and tips on how to avoid them.

Damage	Cause	Action
Stains	Unsupervised cooking process.	Monitor the cooking process.
Stains, blisters	Spilled food, especially food with a high sugar content.	Remove immediately with a glass scraper.
Stains, blisters or fractures in the glass	Defective cookware, cookware with melted enamel or cookware with copper or aluminium base.	Use suitable cookware that is in a good condition.
Stains, discolouration	Unsuitable cleaning methods.	Only use cleaning agents that are suitable for glass ceramic, and only clean the hob when it is cold.
Blisters or fractures in the glass	Knocks or falling cookware, cooking accessories or other hard or pointed objects.	When cooking, do not hit the glass or let objects fall onto the hob.
Scratches, discolouration	Rough cookware bases or moving the cookware on the hob.	Check the cookware. Lift the cookware when moving it.
Scratches	Salt, sugar or sand.	Do not use the hob as a work surface or storage space.
Damage to the appliance	Cooking with frozen cookware.	Never use frozen cookware.
Damage to the cookware or the appliance	Cooking without contents.	Never place or heat empty cookware on a hot cooking zone.
Glass damage	Melted material on the hot cooking zone or hot pot lid on the glass.	Do not place greaseproof paper or aluminium foil nor plastic containers or pot lids on the hob.
Overheating	Hot cookware on the control panel or on the frame.	Never place hot cookware on these areas.

ATTENTION!

A fan is located on the underside of this hob.

- If a drawer is located on the underside of the hob, do not store any small or pointed objects, paper or tea towels in it. These objects may be sucked in and damage the fan or impair the cooling.
- There must be a clearance of at least 2 cm between the contents of the drawer and the fan entry point.

3 Environmental protection and saving energy

3.1 Disposing of packaging

The packaging materials are environmentally compatible and can be recycled.

- Sort the individual components by type and dispose of them separately.

3.2 Saving energy

If you follow these instructions, your appliance will use less energy.

Select the cooking zone to match the size of your pan. Centre the cookware on the hob.
Use cookware whose base diameter is the same diameter as the hotplate.

Tip: Cookware manufacturers often give the upper diameter of the saucepan. It is often larger than the base diameter.

- Unsuitable cookware or incompletely covered cooking zones consume a lot of energy.

Cover saucepans with suitable lids.

- Cooking without a lid consumes considerably more energy.

Lift lids as infrequently as possible.

- When you lift the lid, a lot of energy escapes.

Use a glass lid.

- You can see into the pan through a glass lid without having to lift it.

Use pots and pans with flat bases.

- Uneven bases increase energy consumption.

Use cookware that is suitable for the quantity of food.

- Large items of cookware containing little food need more energy to heat up.

Cook with only a little water.

- The more water that is contained in the cookware, the more energy is required to heat it up.

Turn down to a lower power level early on.

- If you use an ongoing power level that is too high, you will waste energy.

Product Information according (EU) 66/2014 can be found on the attached appliance pass and online on the product page for your appliance.

4 Suitable cookware

Cookware that is suitable for induction cooking must have a ferromagnetic base, i.e. it must be attracted by a magnet. The base must also match the size of the cooking zone. If cookware is not detected on a cooking zone, place this on the cooking zone with the next smallest diameter.

4.1 Size and characteristics of the cookware

To correctly detect the cookware, take the size and the material of the cookware into consideration. All cookware bases must be perfectly flat and smooth.
You can use Cookware test to check whether your cookware is suitable. You can find more information about this under
→ *"Cookware test", Page 11*.

Cookware	Materials	Properties
Recommended cookware 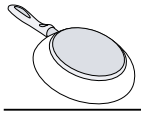	Stainless steel cookware in a sandwich design that distributes the heat well.	This cookware distributes the heat evenly, heats up quickly, and ensures that it can be detected easily.
	Ferromagnetic cookware made of enamelled steel, cast iron or special induction cookware made of stainless steel.	This cookware heats up quickly and ensures that it can be detected easily.
Suitable 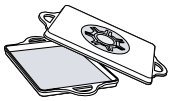 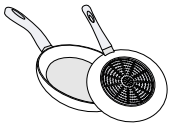	The base is not fully ferromagnetic.	If the ferromagnetic area is smaller than the base of the cookware, only the area that is ferromagnetic heats up. As a result, the heat is not distributed evenly.
	Cookware bases with aluminium content.	These reduce the ferromagnetic area, which means that less power is emitted to the cookware. This cookware may not be sufficiently detected or may not be detected at all, and therefore does not heat sufficiently.
Not suitable	Cookware made from normal thin steel, glass, clay, copper or aluminium.	

Notes

- Do not use adapter plates between the hob and the cookware.
- Do not heat up empty cookware and do not use cookware with a thin base, as this may become very hot.

5 Familiarising yourself with your appliance

5.1 Cooking with induction

In comparison to conventional hobs, induction technology brings with it a series of changes and has a number of benefits such as time savings when cooking and frying, energy savings as well as greater ease of cleaning and care. It also offers improved heat control as the heat is generated directly in the cookware.

5.2 Control panel

Individual details, such as colour and shape, may deviate from the figure.

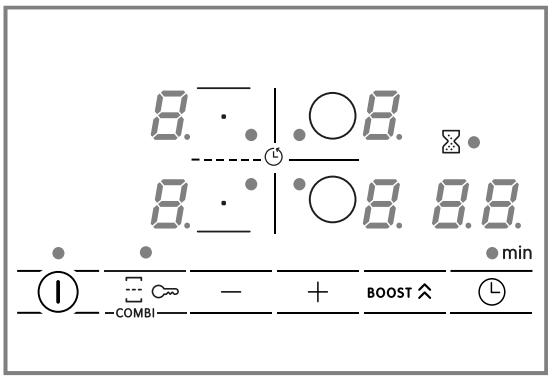

Touch fields

Sensor	Function
⏻	Main switch
○/⊟	Selecting the cooking zone
⊟	CombiZone
−/+	Selecting settings
BOOST ⌃	PowerBoost
◷	Time-setting options
⊶	Childproof lock

Displays

Display	Function
0	Operating status
1-9	Power levels
H/h	Residual heat
b	PowerBoost
00	Time-setting options

Touch fields and displays

Touch a symbol to activate the function it represents.

- Always keep the control panel clean and dry. Moisture impairs the function.
- Do not place any cookware near the indicators or sensors. The electronics may overheat.

5.3 Distribution of the cooking zones

The specified power has been measured with the standard pots, which are described in IEC/EN 60335-2-6. The power may vary depending on the size of the cookware or cookware material.

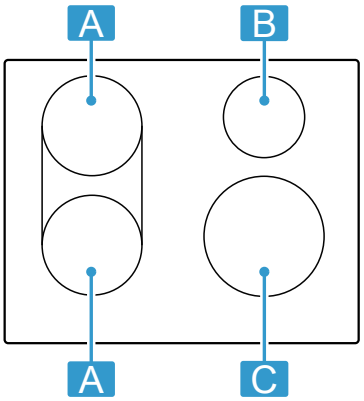

Area	Highest power level	
A 18 cm diameter	Power level 9 PowerBoost	1800 W 3100 W
A Diameter 18+18 cm	Power level 9	3600 W
B 14.5 cm diameter	Power level 9 PowerBoost	1400 W 2200 W
C 21 cm diameter	Power level 9 PowerBoost	2200 W 3700 W

5.4 Cooking zone

Before you start cooking, check whether the size of the cookware fits the cooking zone that you want to use for cooking:

Area	Cooking zone type
○	Single-circuit cooking zone
⊟	Combi cooking zone → *Page 9*

5.5 Residual heat indicator

The hob has a residual heat indicator for each cooking zone. Do not touch the cooking zone if the residual heat indicator is lit.

Display	Meaning
H	The cooking zone is hot.
h	The cooking zone is warm.

6 Basic operation

6.1 Switching the hob on and off

- Switch the hob on and off using the main switch ⏻.

If all of the cooking zones are switched off for longer than 20 seconds, the hob is automatically switched off.

ReStart

- If you switch the appliance on within four seconds of switching it off, the hob operates with the settings that were previously set.

6.2 Setting the cooking zones

To choose the required selectable power level, touch + or −.
Each power level has an intermediate level. This is marked with a dot.

Power level	
1	Lowest power level
9	Highest power level

Selecting the cooking zone and power setting

1. Touch ○/☰ to select the cooking zone.
2. Within the next 10 seconds, select the required power level:
   – Touch + to call up power level 9.
   – Touch − to call up power level 4.

✔ The power level has been set.

Note: If no cookware is placed on the cooking zone or the pot is not suitable, the selected power level flashes. After a certain period of time, the cooking zone switches itself off.

QuickStart

- If you place cookware on the hob before you switch it on, the cookware is detected when you switch on and the corresponding cooking zone is selected automatically. Select the power level in the next 20 seconds, or the hob switches itself off.

Changing the power level and switching off the cooking zone

1. Select the cooking zone.
2. Touch + or − until the required power level appears. To switch off the cooking zone, set 0.

Switching off the cooking zone quickly

Touch and hold the symbol for the cooking zone for three seconds. The cooking zone switches itself off.

6.3 Cooking recommendations

The table shows which power level (▁=☰) is suitable for which food. The cooking time (◷ min) may vary depending on the type, weight, thickness and quality of the food. To preheat, set power level 8–9.

	▁=☰	◷ min
Melting		
Butter, honey, gelatine	1 - 2	-
Heating and keeping warm		
Boiled sausages[1]	3 - 4	-
Defrosting and heating		
Spinach, frozen	3 - 4	15 - 25
Poaching, simmering		
Potato dumplings [1]	4. - 5.	20 - 30
Whisked sauces, e.g. Béarnaise sauce, Hollandaise sauce	3 - 4	8 - 12
Boiling, steaming, braising		
Rice, with double the volume of water	2. - 3.	15 - 30
Unpeeledboiled pots	4. - 5.	25 - 35
Pasta [1]	6 - 7	6 - 10
Soups	3. - 4.	15 - 60
Vegetables	2. - 3.	10 - 20
Stew in a pressure cooker	4. - 5.	-
Stewing		
Pot roast	4 - 5	60 - 100
Goulash [2]	3 - 4	50 - 60
Braising/frying with a small amount of fat [1]		
Escalope, plain or breaded	6 - 7	6 - 10
Steak (3 cm thick)	7 - 8	8 - 12
Poultry breast (2 cm thick)	5 - 6	10 - 20
Hamburgers (2 cm thick)	6 - 7	10 - 20
Fish and fish fillet, breaded	6 - 7	8 - 20
Prawns and scampi	7 - 8	4 - 10
Sautéing fresh vegetables and mushrooms	7 - 8	10 - 20
Frozen dishes, e.g. stir-fries	6 - 7	6 - 10
Omelette (cooked one after the other)	3. - 4.	3 - 10
Deep-frying, 150–200 g per portion in 1–2 l oil, deep-fat fried in portions[1]		
Frozen products, e.g. chips, chicken nuggets	8 - 9	-
Vegetables, mushrooms, breaded, beer-battered or tempura	6 - 7	-
Small baked items, e.g. doughnuts, battered fruit	4 - 5	-

[1] Without lid
[2] Preheat to power level 8 - 8.

7 CombiZone

It allows two cooking zones of the same size to be combined, with the same power level being switched on in both. This is intended in particular for cooking with long cookware.
This function allows you to cook with one item of cookware that occupies one cooking zone and that can be moved from one zone to another for increased convenience. In this case, the two zones also retain the same power level and the same settings.

7.1 Positioning the cookware

Use cookware that fits into the cooking zones.

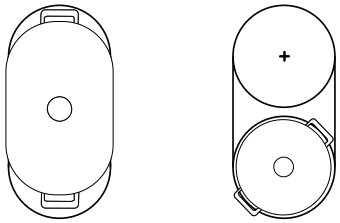

7.2 Activating CombiZone

1. Select one of the cooking zones and set the power level.
2. Touch ⊟.
✔ ● lights up and the power level is shown in the displays for both cooking zones.

7.3 Deactivating CombiZone

▸ Touch ⊟.
✔ The two cooking zones now operate independently of one another.

8 Time-setting options

Your hob has various functions for setting the cooking time:
- Switch-off timer
- Timer

8.1 Switch-off timer

Allows you to programme a cooking time for a hotplate and its automatic switch-off once the set time has elapsed.

Programming the cooking time

1. Select the cooking zone and the required power level.
2. Touch ◷.
✔ The • display lights up in the cooking zone.
3. Use + or − to select the cooking time.
✔ The time begins to count down.

Notes
- You can automatically set the same cooking time for all cooking zones. You can find more information about this under
→ *"Basic settings", Page 10*.
- If you select the CombiZone function for the combined cooking zone, the set time for both cooking zones is the same.

Changing or deleting the cooking time

1. Select the cooking zone.
2. Touch ◷.
3. To change the cooking time, touch + or − or set it to 00.

8.2 Timer

Enables the activation of a timer of 0–99 minutes. This function can be used independently of the cooking zones and other settings. It does not automatically switch off the hotplates.

Setting the kitchen timer

1. Select the hotplate and touch ◷ twice.
✔ • beside ⌛ lights up.
2. Use + or − to select the required time.
✔ The time counts down.

Changing or deleting the timer duration

1. Touch ◷ repeatedly until the • display beside ⌛ lights up.
2. To change the cooking time, touch + or − or set it to 00.

9 PowerBoost

Allows larger volumes of water to be heated more quickly than with the power level 9.
This function is available for all cooking zones if no other cooking zone is in use.
Otherwise b and 9 flash in the power level display.

Press BOOST ⌃ to switch on or off.

Note: In the combi zone, you can only activate the PowerBoost function if you are using the two cooking zones as two independent cooking zones.

10 Childproof lock

The hob is equipped with a childproof lock. This prevents children from switching on the hob.
To switch the function on, switch the hob off.
Touch ⊶ for four seconds to switch on or off.

If you want to activate the childproof lock automatically every time the hob is switched off, you can find further information under Basic settings → *Page 10*.

11 Basic settings

You can configure the basic settings for your appliance to meet your needs.

11.1 Overview of the basic settings

Display	Setting	Value
c 1	Childproof lock	0 - Manual.[1] 1 Automatic. 2 – Switched off.
c 2	Audible signals	0 – Confirmation and fault signals are switched off. 1 – Only the fault signal is switched on. 2 – Only the confirmation signal is switched on. 3 – All signal tones are switched on [1].
c 5	Automatic switch-off of the cooking zones.	0 0 – switched off.[1] 0 1-9 9 - minutes until the appliance switches off automatically.
c 6	Duration of the timer end signal tone	1 – 10 seconds [1] 2 – 30 seconds 3 - 1 minute
c 7	Power limitation Enables the total power of the hob to be limited, if necessary, based on the conditions of your electrical installation. The available settings depend on the maximum power of the hob. You can find precise information on the rating plate. If the function is active and the hob has reached the set power limit, _ is displayed and you cannot select a higher power level.	0 - Switched off. Maximum power of the hob [1]. 1 - 1000 W. Lowest power setting. 1. - 1500 W. ... 3 - 3000 W. Recommended for 13 A. 3. - 3500 W. Recommended for 16 A. 4 - 4000 W. 4. - 4500 W. Recommended for 20 A. ... 9 - Maximum power of the hob.
c 9	Time for selecting the cooking zone	0 - Unlimited: You can adjust the last selected cooking zone without having to select it again.[1] 1 – Limited: You can adjust the last selected cooking zone within 10 seconds after selecting it. After this time, you must select the cooking zone again before adjusting it.
c 12	Cookware test You can use this function to test the quality of the cookware.	0 - Not suitable. 1 - Not optimal. 2 - Suitable.
c 23	Automatic management with power limitation	0 - Deactivated: Does not show the power limit unless c 7 is activated.[1] 1 - Switched on: Always displays the power limit.
c 0	Restoring factory settings	0 - Individual settings [1]. 1 - Factory settings.

[1] Factory setting

11.2 To go to the basic settings

Requirement: The hob must be switched off.

1. To switch on the hob, touch ①.
2. Within the next 10 seconds, press and hold ⊶ for four seconds.

Product information	Display
Directory for the technical after-sales service (TK)	0 1
Production number	Fd

Product information	Display
Production number 1	02.
Production number 2	0.5

✔ The first four displays provide the product information. Touch + or — to view the individual displays.

3. Touch ⊂⊃ to access the basic settings.

✔ c and 1 light up alternately as well as 0 as a preset value.

4. Touch ⊂⊃ repeatedly until the desired setting appears.
5. Use + or — to select the required value.
6. Touch and hold ⊂⊃ for four seconds.

✔ The settings are saved.

11.3 Exiting the basic settings

▸ To exit the basic settings and and switch off the hob, touch ①.

12 Cookware test

The quality of the cookware has a major influence on the speed and the result of the cooking process.
You can use this function to test the quality of the cookware.
Before the test, ensure that the size of the cookware base corresponds to the size of the cooking zone being used.
Access is via the basic settings. → *Page 10*

12.1 Carrying out Cookware test

1. At room temperature, place the cookware with approx. 200 ml water in the centre of the cooking zone that best fits the base of the cookware in terms of size.
2. Call up the basic settings and select c 12.
3. Touch + or —. The — display flashes in the cooking zones.

✔ The function has been activated.

✔ After 20 seconds, the result appears in the cooking zone displays.

12.2 Checking the result

You can see what the result means for the quality and speed of the cooking process in the following table.

Result	
0	The cookware is not suitable for the cooking zone and therefore does not heat up.
1	The cookware is taking longer to heat up than expected and cooking is not progressing as well as it ought to.
2	The cookware is heating up correctly and cooking is progressing well.

Note: If you have any unfavourable results, reposition the cookware on a smaller cooking zone, if available.

Touch + or — to activate the function.

13 Cleaning and servicing

To keep your appliance working efficiently for a long time, it is important to clean and maintain it carefully.

13.1 Cleaning products

You can obtain suitable cleaning products and glass scrapers from customer service, a retailer or the online shop www.bosch-home.com.

ATTENTION!

Unsuitable cleaning products may damage the surfaces of the appliance.

▸ Never use unsuitable cleaning products.
▸ Do not use cleaning products while the hob is still hot. This may cause marks on the surface.

Unsuitable cleaning products

- Undiluted detergent
- Detergent intended for dishwashers
- Abrasive cleaning products
- Aggressive cleaning products such as oven spray or stain remover
- Abrasive sponges
- High-pressure or steam jet cleaners

13.2 Cleaning the hob

Clean the hob after every use to stop cooking residues from getting burnt on.

Requirement: The hob must be cold. Do not allow the hob to cool down if it has sugar stains, plastic or aluminium foil on it.

1. Remove heavy soiling using a glass scraper.
2. Clean the hob with a cleaning agent for glass ceramic.
   Follow the cleaning instructions on the packaging of the cleaning agent.
   Tip: You can achieve good cleaning results using a special sponge for glass ceramic.

13.3 Cleaning the hob surround

If the hob frame is dirty or stained after use, clean this.

Note: Do not use a glass scraper.

1. Clean the hob frame with hot soapy water and a soft cloth.
   Wash new sponge cloths thoroughly before use.
2. Dry with a soft cloth.

14 Troubleshooting

You can rectify minor faults on your appliance yourself. Read the troubleshooting information before contacting after-sales service. This will avoid unnecessary costs.

⚠ **WARNING – Risk of injury!**
Improper repairs are dangerous.
- ▸ Repairs to the appliance should only be carried out by trained specialist staff.
- ▸ If the appliance is defective, call Customer Service.

⚠ **WARNING – Risk of electric shock!**
Incorrect repairs are dangerous.
- ▸ Repairs to the appliance should only be carried out by trained specialist staff.
- ▸ Only use genuine spare parts when repairing the appliance.
- ▸ If the power cord of this appliance is damaged, it must be replaced with a special connection cable, which is available from the manufacturer or his Customer Service.

14.1 Warnings

Notes
- If E appears in the displays, press and hold the sensor for the respective cooking zone and read the fault code.
- If the fault code is not listed in the table, disconnect the hob from the power supply and wait 30 seconds before reconnecting it. If this display appears again, contact the technical after-sales service and specify the exact fault code.
- If an error occurs, the appliance does not switch to standby mode.
- In order to protect the appliance's electronic parts from overheating or surge currents, the hob may temporarily reduce the power level.

14.2 Information on the display panel

Fault	Cause and troubleshooting
No displays light up.	The power supply has been disconnected. ▸ Use other electrical appliances to check whether there has been a power failure.
	The appliance has not been connected as shown in the circuit diagram. ▸ Connect the appliance in accordance with the circuit diagram.
	Electronics fault ▸ If you are unable to rectify the fault, inform the technical after-sales service.
The displays flash.	The control panel is wet or an object is covering it. ▸ Dry the control panel or remove the object.
F2, F4, E7015, E8207, E8208	The electronics have overheated and one or all of the cooking zones have been switched off. ▸ Wait until the electronics have cooled down sufficiently. Then touch any button on the control panel.
F5 + power level and audible signal	There is hot cookware in the vicinity of the control panel. This may cause the electronics to overheat. ▸ Remove the cookware. The fault display goes out shortly afterwards. You can continue to cook.
F5 and signal tone	There is hot cookware in the vicinity of the control panel. The cooking zone has been switched off to protect the electronics. ▸ Remove the cookware. Wait a few seconds. Touch any button. When the fault display goes out, you can continue cooking.
F1/F6	The cooking zone has overheated and has been switched off to protect the work surface. ▸ Wait until the electronics have cooled down sufficiently before switching the cooking zone back on.
F8	The cooking zone has been operating continuously for an extended period. ▸ Individual safety switch-off is switched on. Touch any button to switch off the display so that you can set the cooking zone again.
E9000/E9010	The operating voltage is incorrect and outside of the normal operating range. ▸ Contact your energy supplier.
U400	The hob is not connected correctly. ▸ Disconnect the hob from the mains. Connect the hob in accordance with the circuit diagram.

Fault	Cause and troubleshooting
dE	Demo mode is activated. ▸ Disconnect the hob from the mains. Wait for 30 seconds and connect the hob. Touch any sensor in the next three minutes. Demo mode is deactivated.

14.3 Normal noises from your appliance

An induction hob may sometimes cause noises or vibrations, such as buzzing, crackling, hissing noises, fan noises or rhythmic noises.

15 Disposal

15.1 Disposing of old appliance

Valuable raw materials can be reused by recycling.

1. Unplug the appliance from the mains.
2. Cut through the power cord.
3. Dispose of the appliance in an environmentally friendly manner.
   Information about current disposal methods are available from your specialist dealer or local authority.

This appliance is labelled in accordance with European Directive 2012/19/EU concerning used electrical and electronic appliances (waste electrical and electronic equipment - WEEE).
The guideline determines the framework for the return and recycling of used appliances as applicable throughout the EU.

16 Customer Service

Function-relevant genuine spare parts according to the corresponding Ecodesign Order can be obtained from Customer Service for a period of at least 10 years from the date on which your appliance was placed on the market within the European Economic Area.

Note: Under the terms of the manufacturer's warranty the use of Customer Service is free of charge.

Detailed information on the warranty period and terms of warranty in your country is available from our after-sales service, your retailer or on our website.
If you contact Customer Service, you will require the product number (E-Nr.) and the production number (FD) of your appliance.
The contact details for Customer Service can be found in the enclosed Customer Service directory or on our website.

16.1 Product number (E-Nr.) and production number (FD)

You can find the product number (E-Nr.) and the production number (FD) on the appliance's rating plate.
The rating plate can be found:

- on the appliance certificate.
- on the lower section of the hob.

The product number (E no.) can also be found on the glass ceramic. You can also display the customer service index (KI) and the production number (FD) in the basic settings. → *Page 10*
Make a note of your appliance's details and the Customer Service telephone number to find them again quickly.

17 Test dishes

These recommended settings are intended for test institutes to facilitate the testing of our appliances. The tests were carried out using our cookware sets for induction hobs. If required, these accessory sets can be purchased at a later point from specialist retailers, or through our technical after-sales service or our online shop.

17.1 Melting the chocolate coating

Ingredients: 150 g dark chocolate (55% cocoa).

- 16 cm saucepan without lid
  - Boiling: Power level 1.

17.2 Heating and keeping lentil stew warm

Recipe in accordance with DIN 44550
Initial temperature 20 °C
Heating up without stirring

- 16 cm saucepan with lid, amount: 450 g
  - Heating up: Duration 1 min. 30 sec., power level 9
  - Simmering: Power level 1.
- 20 cm saucepan with lid, amount: 800 g
  - Heating up: Duration 2 min. 30 sec., power level 9
  - Simmering: Power level 1.

17.3 Heating and keeping lentil stew warm

E.g.: Lentil diameter 5–7 mm. Initial temperature 20 °C
Stir after heating for 1 minute

- 16 cm saucepan with lid, amount: 500 g
  - Heating up: Duration approx. 1 min. 30 sec., power level 9
  - Simmering: Power level 1.
- 20 cm saucepan with lid, amount: 1 kg
  - Heating up: Duration approx. 2 min. 30 sec., power level 9
  - Simmering: Power level 1.

17.4 Béchamel sauce

Milk temperature: 7 °C

- 16 cm saucepan without lid, ingredients: 40 g butter, 40 g flour, 0.5 l milk with 3.5% fat content and a pinch of salt

Preparing Béchamel sauce

1. Melt the butter, stir in the flour and salt, and heat up the mixture.
   - Heating up: Duration 6 min., power level 2
2. Add the milk to the roux and bring to the boil, stirring continuously.
   - Heating up: Duration 6 min. 30 sec., power level 7
3. Once the Béchamel sauce comes to the boil, leave it on the cooking zone for a further two minutes.
   - Simmering: Power level 2

17.5 Cooking rice pudding with the lid on

Milk temperature: 7 °C
1. Heat the milk until it starts to rise up. Heat up without a lid. Stir after heating for 10 min.
2. Set the recommended power level and add rice, sugar and salt to the milk.
The cooking time, including heating up, is approx. 45 minutes.

- 16 cm saucepan, ingredients: 190 g short-grain rice, 90 g sugar, 750 ml milk with 3.5% fat content and 1 g salt
  - Heating up: Duration approx. 5 min. 30 sec., power level 8.
  - Simmering: Power level 3
- 20 cm saucepan, ingredients: 250 g short-grain rice, 120 g sugar, 1 l milk with 3.5% fat content and 1.5 g salt
  - Heating up: Duration approx. 5 min. 30 sec., power level 8.
  - Simmering: Power level 3, stir after 10 minutes

17.6 Cooking rice pudding without a lid

Milk temperature: 7 °C
1. Add the ingredients to the milk and heat the mixture up while stirring continuously.
2. Once the milk has reached approx. 90 °C, select the recommended power level and leave it to simmer on a low heat for approx. 50 minutes.

- 16 cm saucepan without lid, ingredients: 190 g short-grain rice, 90 g sugar, 750 ml milk with 3.5% fat content and 1 g salt
  - Heating up: Duration approx. 5 min. 30 sec., power level 8.
  - Simmering: Power level 3
- 20 cm saucepan without lid, ingredients: 250 g short-grain rice, 120 g sugar, 1 l milk with 3.5% fat content and 1.5 g salt
  - Heating up: Duration approx. 5 min. 30 sec., power level 8.
  - Simmering: Power level 2.

17.7 Cooking rice

Recipe in accordance with DIN 44550
Water temperature: 20 °C

- 16 cm saucepan with lid, ingredients: 125 g long-grain rice, 300 g water and a pinch of salt
  - Heating up: Duration approx. 2 min. 30 sec., power level 9
  - Simmering: Power level 2
- 20 cm saucepan with lid, ingredients: 250g long-grain rice, 600 g water and a pinch of salt
  - Heating up: Duration approx. 2 min. 30 sec., power level 9
  - Simmering: Power level 2.

17.8 Roasting a pork loin

Initial temperature of the loin: 7 °C

- 24 cm pan without lid, ingredients: 3 pork loins, total weight approx. 300 g, 1 cm thick, and 15 g sunflower oil
  - Heating up: Duration approx. 1 min. 30 sec., power level 9
  - Simmering: Power level 7

17.9 Preparing crêpes

Recipe in accordance with DIN EN 60350-2

- 24 cm pan without lid, ingredients: 55 ml batter per crêpe
  - Heating up: Duration 1 min. 30 sec., power level 9
  - Simmering: Power level 7

17.10 Deep-fat frying frozen chips

- Pot dia. 20 cm without lid: ingredients: 2 l sunflower oil. For each frying time: 200 g frozen chips, 1 cm thick.
  - Heating up: Power level 9, until the oil temperature reaches 180 °C.
  - Simmering: Power level 9

18 Installation instructions

18.1 General information

- Read this instruction manual carefully.
- Only a licensed expert may connect the appliance.
- Improper installation, opening of the appliance, connection or assembly may lead to a loss of validity of the product warranty.
- Switch off the power supply before carrying out any work.
- After installation, ensure that the user does not have access to the electrical components.
- Never use this appliance in boats or in vehicles.

18.2 Safe installation

Follow these safety instructions when installing the appliance.
The appliance can only be used safely if it is correctly installed in accordance with the installation instructions. The installer is responsible for ensuring that the appliance works perfectly at its installation location.

⚠ WARNING – Danger: Magnetism!

The appliance contains permanent magnets. They may affect electronic implants, e.g. pacemakers or insulin pumps.

- ▸ Persons with electronic implants must stand at least 10 cm away from the appliance.

⚠ WARNING – Risk of injury!

Parts that are accessible during installation may have sharp edges and may lead to cutting injuries.

- ▸ Wear protective gloves

18.3 Instructions for the electrical connection

In order to safely connect the appliance to the electrical system, observe the following instructions.

- Only an authorised expert or a specially trained service technician may connect the appliance. The person must be approved in accordance with the local regulations of the country and the electricity supply company.
- Connect the appliance to a fixed installation and set up appropriate isolating switches in accordance with the installation regulations.
- The manufacturer shall assume no liability for malfunctions or damage resulting from incorrect electrical wiring.

Connection type

- The appliance corresponds to protection class 1. You should therefore only use the appliance with a protective earth connection.

18.4 Information on fitted units

- You can only install the induction hob above drawers or ovens with fan ventilation. Do not install refrigerators, dishwashers, non-ventilated ovens or washing machines below the hob.
- Ensure that the fitted unit is heat-resistant up to at least 90 °C.

Worktop

Follow the worktop manufacturer's recommendations.

- Level, horizontal, stable.
- The worktop into which you are fitting the appliance must be able to withstand loads of approx. 60 kg.
- For thin worktops, use heat-resistant and moisture-resistant reinforcement material.
- Only check the evenness of the hob after it has been installed.

Extractor hood

- The clearance between the extractor hood and the hob must correspond at least to the clearance specified in the installation instructions for the extractor hood.

18.5 Preparing the fitted units

1. Mark the unit cut-out in accordance with the installation diagram.
   – Ensure that the angle of the cut surface to the worktop is 90°.

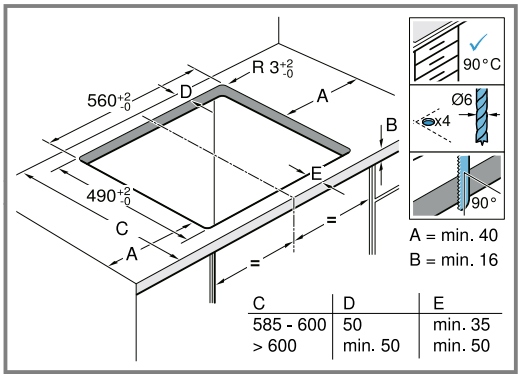

2. After making the cut-outs, remove any shavings.
3. Seal the cut surfaces with heat-resistant material.

Ventilation

To guarantee that the appliance works correctly, the hob must be sufficiently ventilated. The ventilation in the lower section of the appliance requires a sufficient supply of fresh air. Therefore, if required, adjust the units for this purpose.

1. Maintain a minimum clearance between the rear of the unit and the kitchen wall.

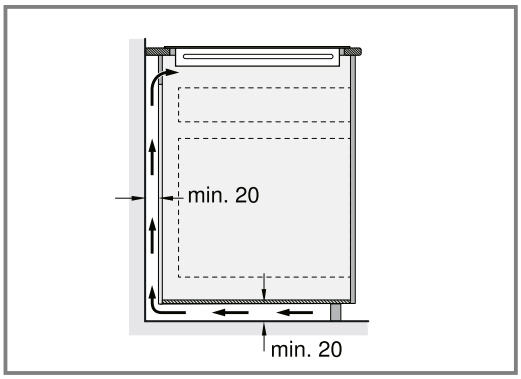

2. Ensure that an opening at the top of the rear of the unit is unobstructed.

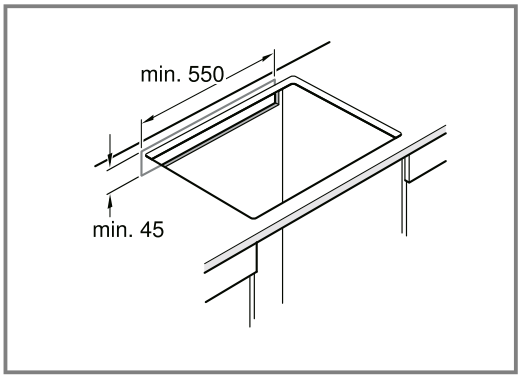

3. If the clearance from the back wall of the unit is less than 20 mm, create an opening on the underside.

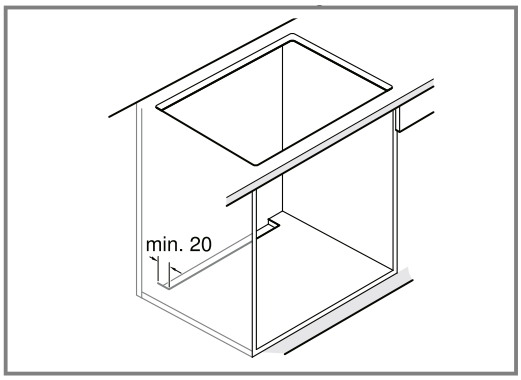

4. Do not hermetically seal the lower base.

Note: If the appliance is installed in an island unit or in another location that is not described here, guarantee that the hob is ventilated appropriately.

Installation above a drawer

- In order to guarantee good ventilation, the clearance between the surface of the worktop and the upper area of the drawer must be 65 mm.

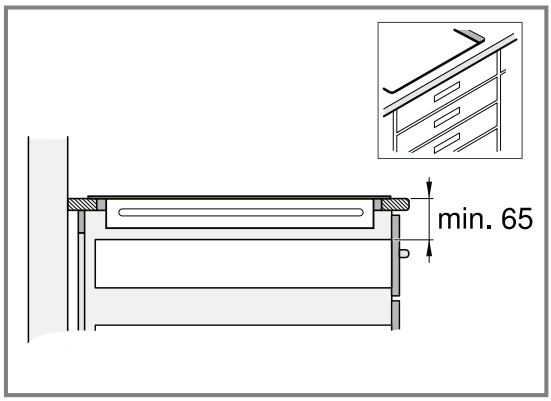

Installation above an oven

- To ensure good ventilation, the clearance between the top of the worktop and the surface of the oven front must be 30 mm and the minimum clearance between the oven and hob must be 5 mm.
- If the clearance between the hob and the oven needs to be increased, refer to the installation instructions for the oven.

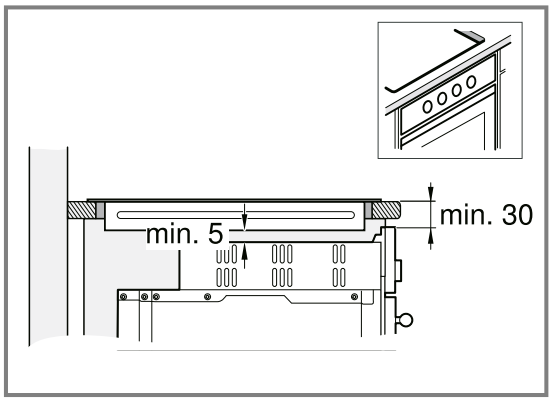

18.6 Inserting the hob

1. Insert the hob in the cut-out.

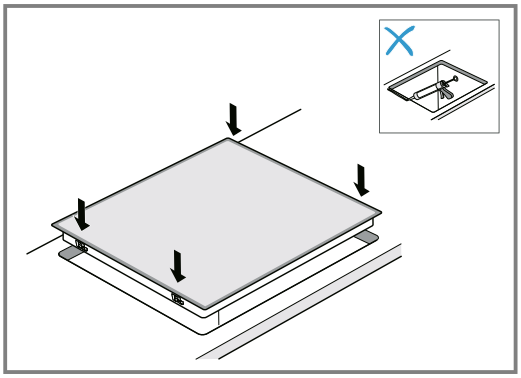

2. Seal the tile joints on tiled work surfaces with silicone rubber.

Note: Do not kink or trap the connection cable, and keep it away from sharp edges and hot parts.

18.7 Insert the hob into the worktop cut-out with a depth of 500 mm

1. Mark the centre of the worktop cut-out.

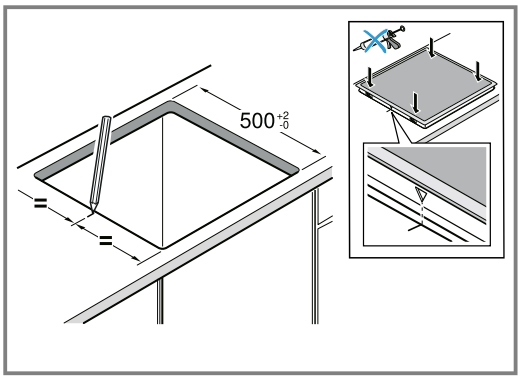

2. Insert the hob.
3. Align the markings on the hob frame with those of the worktop.
4. Press in the hob.

Note: Do not kink or trap the connection cable, and keep it away from sharp edges and hot parts.

18.8 Connecting the appliance

Requirement: Observe the connection data on the rating plate.

1. Only connect as shown in the circuit diagram:

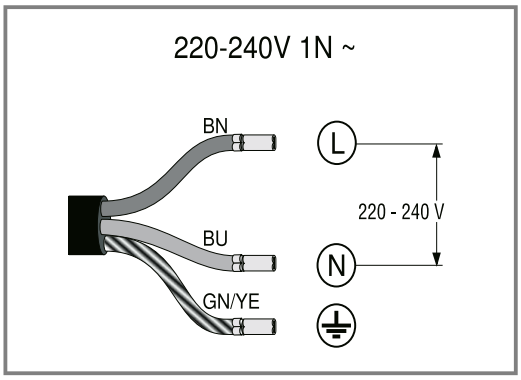

– BN: Brown
– BU: Blue
– GN/YE: Green and yellow

2. Check that the appliance is ready for operation: If U 400, E0513 or E appears on the appliance's display, the appliance is not connected correctly. Disconnect the appliance from the power supply and check the power cord connection at the mains supply.

18.9 Special combinations

If you install the hob above an oven made by another brand, use a wooden partition floor.

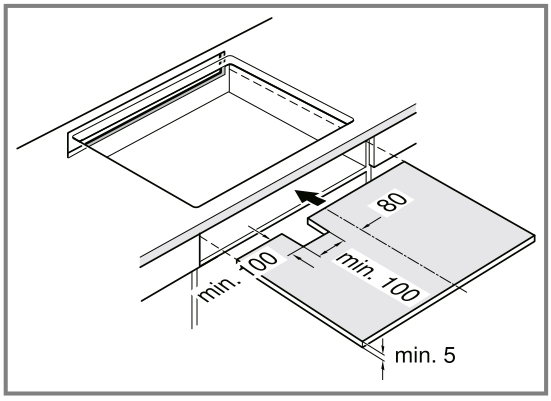

18.10 Removing the appliance

ATTENTION!

Tools may damage the appliance.

- Never prise out the appliance from above.

1. Disconnect the appliance from the mains power supply.
2. Push out the hob from below.

Thank you for buying a Bosch Home Appliance!

Register your new device on MyBosch now and profit directly from:

- **Expert tips & tricks for your appliance**
- **Warranty extension options**
- **Discounts for accessories & spare-parts**
- **Digital manual and all appliance data at hand**
- **Easy access to Bosch Home Appliances Service**

Free and easy registration – also on mobile phones:
www.bosch-home.com/welcome

Looking for help? You'll find it here.

Expert advice for your Bosch home appliances, help with problems or a repair from Bosch experts.
Find out everything about the many ways Bosch can support you:
www.bosch-home.com/service
Contact data of all countries are listed in the attached service directory.

BSH Hausgeräte GmbH
Carl-Wery-Straße 34
81739 München, GERMANY
www.bosch-home.com

A Bosch Company

9001867181 (030515)
en

Valid within Great Britain:
Imported to Great Britain by
BSH Home Appliances Ltd.
Grand Union House
Old Wolverton Road
Wolverton, Milton Keynes
MK12 5PT
United Kingdom