BOSCH

Steam oven

CDG714X.1 **CDG714X.1W**

[en] User manual and installation instructions

Bosch BetterFood app

Discover your new appliance with a thousand flexible recipes!

- Vegan, low-carb or gluten-free? You can adapt all the recipes to your preferences.
- Discover recipes for the ingredients you already have at home.
- Healthy cooking made easy thanks to the Nutri-Check health compass.
- Get the optimum settings for your connected appliances in recipes.

This app is only available in certain European countries and languages.

You can find additional information and explanations online.
Scan the QR code on the title page.

Table of contents

INFORMATION FOR USE

1 Safety 2
2 Avoiding material damage 4
3 Environmental protection and saving energy 4
4 Familiarising yourself with your appliance 5
5 Operating modes 6
6 Accessories 7
7 Before using for the first time 8
8 Basic operation 9
9 Time-setting options 11
10 Dishes 13
11 Favourites 14
12 Childproof lock 15
13 Basic settings 15
14 Home Connect 16
15 Cleaning and servicing 18
16 Troubleshooting 22
17 How it works 24
18 Disposal 32
19 Customer Service 32
20 Information regarding Free and Open Source Software 33
21 Declaration of Conformity 33

22 INSTALLATION INSTRUCTIONS 34
22.1 General installation instructions 34

⚠ 1 Safety

Observe the following safety instructions.

1.1 Definition of the signal words

This is where you can find explanations for the safety signal words used in this manual.

⚠ WARNING
This indicates that death or serious injuries may occur as a result of non-observance of this warning.

ATTENTION
This indicates that damage to the appliance or other material damage may occur as a result of non-compliance with this warning.

Note: This alerts you to important information.

1.2 General information

- Read this instruction manual carefully.
- Keep the instruction manual and the product information safe for future reference or for the next owner.
- Do not connect the appliance if it has been damaged in transit.

1.3 Intended use

This appliance is designed only to be built into kitchen units. Read the special installation instructions.
Only a licensed professional may connect appliances without plugs. Damage caused by incorrect connection is not covered under the warranty.

Only use this appliance:
- To prepare meals and drinks.
- in private households and in enclosed spaces in a domestic environment.
- Up to an altitude of 2000 m above sea level.

1.4 Restriction on user group

This appliance may be used by children aged 8 or over and by people who have reduced physical, sensory or mental abilities or inadequate experience and/or knowledge, provided that they are supervised or have been instructed on how to use the appliance safely and have understood the resulting dangers.
Do not let children play with the appliance.

Children must not perform cleaning or user maintenance unless they are at least 15 years old and are being supervised.
Keep children under the age of 8 years away from the appliance and power cable.

1.5 Safe use

Follow these instructions when using a steam function.
Always place accessories in the cooking compartment the right way round.
→ *"Accessories", Page 7*

⚠ WARNING – Risk of burns!
The appliance and its parts that can be touched become hot during use.
- Caution should be exercised here in order to avoid touching heating elements.
- Young children under 8 years of age must be kept away from the appliance.
- Never touch the ventilation openings.

Accessories and cookware get very hot.
- Always use oven gloves to remove accessories or cookware from the cooking compartment.

⚠ WARNING – Risk of scalding!
The accessible parts of the appliance become hot during operation.
- Never touch these hot parts.
- Keep children at a safe distance.

Hot steam may escape when you open the appliance door. Steam may not be visible, depending on the temperature.
- When opening the door, do not stand too close to the appliance.
- Open the appliance door carefully.
- Keep children at a safe distance.

If there is water in the cooking compartment when it is hot, this may create hot steam.
- Never pour water into the cooking compartment when the cooking compartment is hot.

The water in the evaporator dish is still hot even after the appliance has been switched off.
- Never empty the evaporator dish immediately after switching off the appliance.
- Allow the appliance to cool down before cleaning.

Hot liquid may spill over the sides of the accessory when it is removed from the cooking compartment.
- Remove hot accessories with care and always wear oven gloves.

⚠ WARNING – Risk of injury!
Scratched glass in the appliance door may develop into a crack.
- Do not use any harsh or abrasive cleaners or sharp metal scrapers to clean the glass on the oven door, as they may scratch the surface.

⚠ WARNING – Risk of fire!
Due to the hot surfaces, vapours from flammable liquids may catch fire in the cooking compartment (explosion). The appliance door may spring open. Hot steam and jets of flame may escape.
- Do not pour flammable liquids (e.g. alcoholic drinks) into the water tank.
- Only fill the water tank with water or with the descaling solution we have recommended.

⚠ WARNING – Risk of electric shock!
Improper repairs are dangerous.
- Repairs to the appliance should only be carried out by trained specialist staff.
- Only use genuine spare parts when repairing the appliance.
- If the power cord or the appliance power cable of this appliance is damaged, it must be replaced with a special power cord or special appliance power cable, which is available from the manufacturer or its Customer Service.
- If the power cord of this appliance is damaged, it must be replaced by trained specialist staff.

If the insulation of the power cord is damaged, this is dangerous.
- Never let the power cord come into contact with hot appliance parts or heat sources.
- Never let the power cord come into contact with sharp points or edges.
- Never kink, crush or modify the power cord.

An ingress of moisture can cause an electric shock.
- Do not use steam- or high-pressure cleaners to clean the appliance.

If the appliance or the power cord is damaged, this is dangerous.
- Never operate a damaged appliance.
- Never pull on the power cord to unplug the appliance. Always unplug the appliance at the mains.
- If the appliance or the power cord is damaged, immediately unplug the power cord or switch off the fuse in the fuse box.
- Call customer service. →*Page 32*

Once the appliance has been installed, the openings in the back panel of the appliance must not be accessible to children.
- Read the special installation instructions.

⚠ **WARNING – Risk of suffocation!**
Children may put packaging material over their heads or wrap themselves up in it and suffocate.
- Keep packaging material away from children.
- Do not let children play with packaging material.

Children may breathe in or swallow small parts, causing them to suffocate.
- Keep small parts away from children.
- Do not let children play with small parts.

2 Avoiding material damage

ATTENTION
Silicone bakeware is not suitable for operation with steam.
- Cookware must be heat- and steam-resistant.

Using cookware with rust spots may cause corrosion in the cooking compartment. Even the smallest spots of rust can cause corrosion.
- Do not use cookware with rust spots.

Dripping liquids make the cooking compartment floor dirty.
- When steaming with a perforated cooking container, always insert the solid cooking container underneath. This will catch any liquid that drips down.

If descaling solution comes into contact with the control panel or other delicate surfaces, it will damage them.
- Remove descaling solution immediately with water.

Cleaning the water tank in the dishwasher will damage it.
- Do not clean the water tank in the dishwasher.
- Clean the water tank with a soft cloth and standard washing-up liquid.

With certain models, accessories may scratch the door pane when closing the appliance door.
- Always push accessories fully into the cooking compartment.

Sitting or placing objects on the appliance door may damage it.
- Do not place, hang or support objects on the appliance door.
- Do not place cookware or accessories on the appliance door.

If the seal is very dirty, the appliance door will no longer close properly during operation. This may damage the front of adjacent kitchen units.
- Keep the seal clean at all times.
- Never operate the appliance if the seal is damaged or missing.

The prolonged presence of moisture in the cooking compartment leads to corrosion.
- Allow the cooking compartment to dry after use.
- Do not keep moist food in the cooking compartment for a long time with the door closed.
- Do not store food in the cooking compartment.
- Take care not to trap anything in the appliance door.

Improper care may lead to corrosion in the cooking compartment.
- Observe the care and cleaning instructions.
- Once the appliance has cooled down, remove any dirt from the cooking compartment.

Carrying the appliance by the door handle could break it. The door handle cannot support the weight of the appliance.
- Do not carry or hold the appliance by the door handle.

A build-up of heat damages the appliance.
- Never place accessories, foil, greaseproof paper or ovenware on the cooking compartment floor.
- Never cover the cooking compartment floor with any type of foil.
- Keep the cooking compartment floor and the evaporator tray clear.
- Always place the cookware in a perforated cooking container.

Hot water in the water tank may damage the steam system.
- Only fill the water tank with cold water.

3 Environmental protection and saving energy

3.1 Disposing of packaging

The packaging materials are environmentally compatible and can be recycled.
- Sort the individual components by type and dispose of them separately.

3.2 Saving energy

If you follow these instructions, your appliance will use less power.

Only preheat the appliance if the recipe or the recommended settings → *Page 24* tell you to do so.
✔ Not preheating the appliance can reduce the energy used by up to 20%.

Open the appliance door as little as possible during operation.

- ✔ This maintains the temperature in the cooking compartment and eliminates the need for the appliance to reheat.

Cook food on multiple levels at the same time. Put the food with the longest cooking time in first.

- ✔ If you are preparing the food at the same time, shorten the operating time.

Note: In accordance with the EU Ecodesign Directive 2023/826, this appliance is in a different state when switched off. This is referred to below as low power mode.
Even when the main function is not active, the appliance needs energy for:

- Detecting operation of the touch keys
- Monitoring door opening
- Editing the time (without display)

By definition, therefore, there is neither an “off” nor a “standby” mode, which is why the term low power mode is used. EN IEC 60350-1:2023 must be used to measure low power mode.

4 Familiarising yourself with your appliance

4.1 Control panel

You can use the control panel to configure all functions of your appliance and to obtain information about the operating status.
On certain models, specific details such as colour and shape may differ from those pictured.

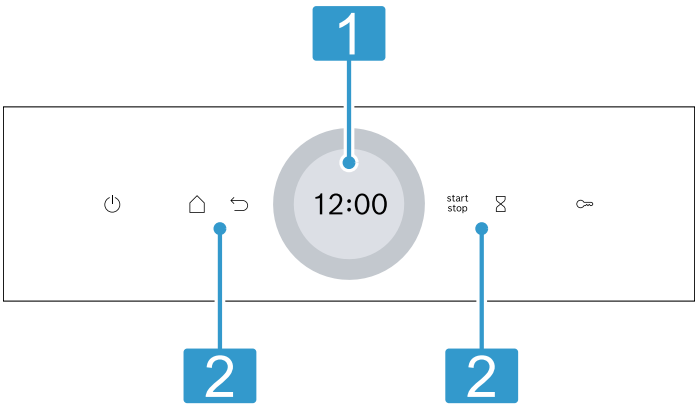

1	**Display with setting ring** You can use the digital setting ring to set the appliance via the display. You will see the current setting values, options or relevant information.
2	**Buttons** You can use the buttons to directly set various functions.

4.2 Display

The display is divided into different areas.

Digital setting ring

Use the digital setting ring on the outside of the display to change the setting values.
When you reach the minimum or maximum value available, this value remains in the display. If required, use the setting ring to turn the value back again.

Status indicator

Status information is shown at the top of the display.

Symbol	Meaning
	Timer is activated. → *"Setting the timer", Page 12*
	Childproof lock is activated. → *"Childproof lock", Page 15*
	Wi-Fi signal strength for Home Connect. The more lines of the symbol are filled, the better the signal. If the symbol is struck through, there is no Wi-Fi signal. If there is an "x" at the symbol, there is no connection to the Home Connect server. → *"Home Connect ", Page 16*
	Remote start with Home Connect is activated. → *"Home Connect ", Page 16*
	Remote diagnostics with Home Connect for maintenance is activated. → *"Home Connect ", Page 16*

Settings area

The settings area is in the centre of the display.
You can see current options and settings that have already been made in the settings area.
The menu and other setting options are arranged horizontally. Selection lists for functions are vertically arranged. Swipe over the display to scroll in the settings area. To select a function, press the function on the display.
→ *"Setting the operating mode", Page 10*

Possible symbols in the settings area

Symbol	Meaning
	Confirm the setting value.
	Reset the setting value.
	Change the setting value while the appliance is in operation.
	Extend an operation.

Note: A blue marking "new" or a blue dot on a function indicates that a new function, a new favourite or an update was downloaded to your appliance using the Home Connect app.

4.3 Buttons

You can use the buttons to directly select various functions.

Button	Function
⏻	Switch the appliance on or off. → *"Basic operation", Page 9*
⌂	Open the "Operating modes" menu. → *"Operating modes", Page 6*
start stop	Start or pause operation. → *"Basic operation", Page 9*
↩	Go back one setting.
⌛	Select the timer. → *"Setting the timer", Page 12*
🔑	Press and hold for approx. 4 seconds to activate the childproof lock.

4.4 Cooking compartment

The functions in the cooking compartment make your appliance easier to use.

Interior lighting

When you open the appliance door, the light in the cooking compartment switches on. If the appliance door remains open for longer than 18 minutes, the light switches off again.
In most operating modes, the interior lighting switches on as soon as operation starts. The interior lighting switches off again when the operation stops.
You can specify whether you want the interior lighting to switch on during operation in the basic settings.
→ *Page 15*

Cooling fan

The cooling fan switches on and off as required. The hot air escapes above the door.

ATTENTION
Covering the ventilation slots will cause the appliance to overheat.
- Do not cover the ventilation slots.

To cool the cooking compartment more quickly after operation, the cooling fan continues to run for a certain period afterwards.
You can specify how long the cooling fan should continue to run by going to the basic settings.

Shelf positions

The shelf positions are numbered from bottom to top.

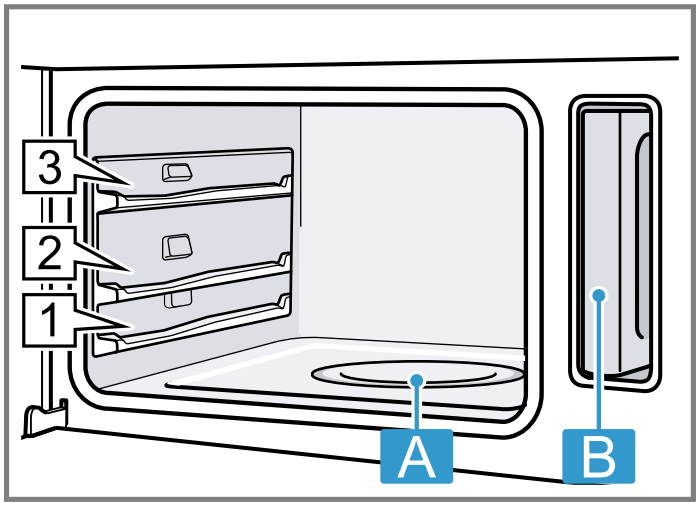

A	Evaporator dish
B	Water tank in the water tank recess

4.5 Appliance door

If you open the appliance door while the appliance is in operation, this pauses operation. If you close the appliance door, operation resumes automatically.

Tip: For optimal cooking results, open the door as infrequently as possible during steaming.

5 Operating modes

The menu is divided into different operating modes.

Operating mode	Use
Steaming	Set and start the appropriate type of steam heating. → *"Basic operation", Page 9*
Dishes	Cook food with steam. → *"Dishes", Page 13*
Cleaning	Descale the water system. → *"Descaling", Page 19*
Basic settings	Adjust the basic settings. → *"Basic settings", Page 15*
Favourites	Use your own saved settings.

Home Connect
With Home Connect, you can connect and remotely control the oven with a mobile device, and use the full functionality of the appliance.
Depending on the appliance type, additional or more comprehensive functions are available for your appliance with the Home Connect app. You can find more information about this in the app.

5.1 Types of steam heating

This is where you can find an overview of the types of steam heating. You will find recommendations for using the types of steam heating.

When you select a type of steam heating, the appliance suggests a suitable temperature. You can use these values or change them within the specified range.

Symbol	Name	Temperature	Use
	Steaming	30-100 °C	For blanching and steaming: ▪ Vegetables ▪ Fish ▪ Side dishes Juice fruit.
	Reheating	80-100 °C	Suitable for plated meals. The steam type of heating gently warms cooked food. The steam ensures that the food does not dry out.
	Dough proofing	30-50 °C	Suitable for yeast dough. The yeast dough proves more quickly than at room temperature. The surface of the dough does not dry out.
	Defrosting	30-60 °C	Suitable for fruit and vegetables. The steam type of heating uses moisture to transfer the heat to the food, gently warming it without impairing its quality. The food does not dry out or lose its shape.

5.2 Residual heat indicator

When the appliance is switched off, the display uses the ⌇⌇⌇ symbol to show the residual heat in the cooking compartment. The further the temperature drops, the less the symbol is visible. The symbol goes out entirely at approx. 60 °C.

6 Accessories

Use original accessories. These have been made especially for your appliance.

Note: Accessories may become deformed if they get hot. Deformation has no effect on function. As the accessory cools down, it will regain its original shape.

The accessories supplied may differ depending on the appliance model.

Accessories	Properties	Use
Steam container, solid, size L	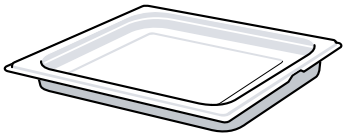	▪ Boil rice, pulses or cereals ▪ Catch dripping liquid, e.g. when steaming
Perforated steam container, size L	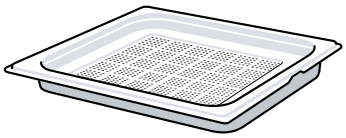	▪ Steam whole fish or larger quantities of vegetables ▪ Juice large quantities of berries

6.1 Locking function

The locking function prevents the accessories from tilting when they are pulled out.
You can pull out the accessories approximately halfway without them tipping. The accessories must be inserted into the cooking compartment correctly for the tilt protection to work properly.

6.2 Inserting the steaming tray

ATTENTION
A build-up of heat damages the appliance.

- Never place accessories, foil, greaseproof paper or ovenware on the cooking compartment floor.
- Never cover the cooking compartment floor with any type of foil.
- Keep the cooking compartment floor and the evaporator tray clear.
- Always place the cookware in a perforated cooking container.

1. Rotate the steaming tray such that the latching cutout a is towards the rear and its shape is pointing upwards.

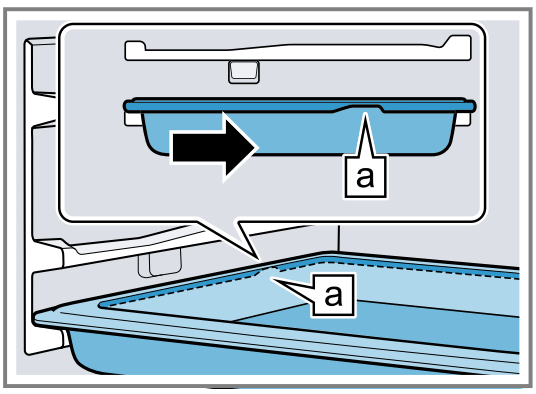

2. Do not push the steaming tray beyond the recess ⓑ.

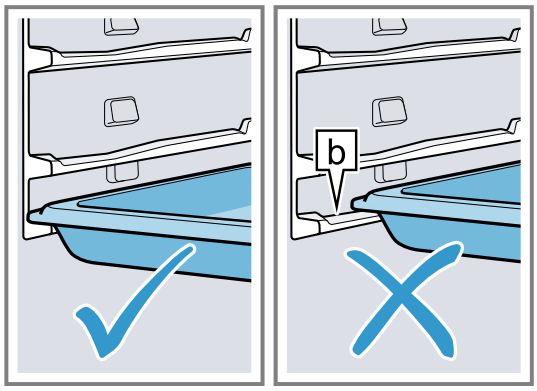

3. Take hold of the steaming tray in the middle to insert it.

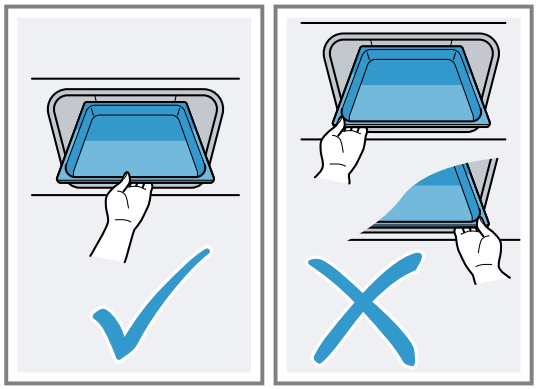

6.3 Other accessories

You can purchase other accessories from our customer service, specialist retailers or online.
You will find a comprehensive range of products for your appliance in our brochures and online:
www.bosch-home.com
Accessories are appliance-specific. When purchasing accessories, always quote the exact product number (E no.) of your appliance.
You can find out which accessories are available for your appliance in our online shop or from our customer service.

7 Before using for the first time

Configure the settings for initial start-up. Clean the appliance and accessories.

7.1 Before using for the first time

Before using the appliance for the first time, ask your water supplier about the hardness of your tap water. To ensure that the appliance can reliably remind you to descale it when required, you must set your water hardness range correctly.

ATTENTION
If the wrong water hardness has been set, the steam function is impaired and appliance cannot remind you to descale it at the right time.
- Set the water hardness correctly.

Using unsuitable liquids may damage the appliance.
- Do not use any liquids other than water.
- Only use cold, fresh tap water, softened water or non-carbonated mineral water.

Notes
- If you are using mineral water, set the water hardness range to "very hard". If you are using mineral water, you must only use non-carbonated mineral water.
- If your tap water is very hard, we recommend that you use softened water. If you are using only softened water, set the "softened" water hardness range.

Setting	Water hardness in mmol/l	German hardness °dH	French hardness °fH
0 (softened) [1]	-	-	-
1 (soft)	Up to 1.5	Up to 8.4	Up to 15
2 (medium)	1.5-2.5	8.4-14	15-25
3 (hard)	2.5-3.8	14-21.3	25-38

[1] Only set this if you will be using solely softened water.

Setting	Water hardness in mmol/l	German hardness °dH	French hardness °fH
4 (very hard)[1]	Over 3.8	Over 21.3	Over 38

7.2 Performing initial start-up

After connecting the appliance to the power supply, you must configure the settings for its initial start-up.

Note: You can also use Home Connect to configure the settings. When your appliance is connected, follow the instructions in the app.

1. Press ⏻ to switch the appliance on.
✔ The first setting appears.
2. To change the setting as required, press a value in the list or change the value using the setting ring. Possible settings:
   - Language
   - Time
   - Date
   - Water hardness
3. Press ✓ and switch to the next setting.
4. Work through the settings and make changes as required.
✔ After the last setting, a message appears on the display confirming that the initial start-up is complete.
5. To check the appliance before heating for the first time, open and close the appliance door once.

7.3 Calibrating and cleaning the appliance before using it for the first time

Calibrate the appliance and clean the cooking compartment and accessories before using it to prepare food for the first time.

Note: The boiling point of water depends on the air pressure. During calibration, the appliance self-adjusts during the first steam operation to the pressure ratio at the installation location.
Do not open the appliance door while calibration is in progress, as this will cancel the calibration process and it must be restarted.

Requirement: The cooking compartment is cold or at room temperature.

1. Remove the product information and the accessories from the cooking compartment. Remove any leftover packaging, such as polystyrene pellets, and any adhesive tape that is in or on the appliance.
2. Wipe the smooth surfaces in the cooking compartment with a soft, damp cloth.
3. Press ⏻ to switch the appliance on.
4. Fill the water tank.
   → *"Filling the water tank", Page 10*
5. Apply the following settings:

Type of heating	Steaming
Temperature	100 °C
Duration	20 minutes

   → *"Basic operation", Page 9*
6. Start the operation.
   ▸ Ventilate the kitchen while the appliance is heating.
✔ Calibration starts. This creates a lot of steam.
✔ When the time has elapsed, a signal sounds. A notification appears on the display confirming that the operation has finished.
7. Allow the appliance to cool down and then dry the cooking compartment floor thoroughly.
8. Once the appliance has cooled down, clean all surfaces in the cooking compartment with a detergent solution and a dish cloth.
9. Empty the water tank and dry the cooking compartment.
   → *"After using the Steam function", Page 11*

Note: Following a power cut, the calibrated settings are retained.
To adjust the appliance to a new installation location after moving house, reset the basic settings to the factory settings. Restart the calibration process.

7.4 Cleaning the accessories

▸ Clean the accessory using soapy water and a dish cloth.

8 Basic operation

8.1 Switching on the appliance

▸ Press ⏻ to switch the appliance on.
✔ The display shows the menu.

8.2 Switching off the appliance

Switch your appliance off when you are not using it. The appliance will switch itself off automatically if it is not used for a certain period of time.

▸ Press ⏻ to switch the appliance off.
✔ The appliance switches off. Any functions currently in progress are cancelled.
✔ The time or residual heat indicator appears on the display.

8.3 Starting the operation

You must start each operation.

▸ Press start stop to start the operation.
✔ The settings appear on the display.

[1] Also set for mineral water. Only use non-carbonated mineral water.

8.4 Interrupting the operation

You can interrupt the operation and then continue again.

1. To interrupt the operation, press start stop.
2. Press start stop again to resume the operation.

8.5 Setting the operating mode

After you have switched on the appliance, the menu appears on the display.

1. To scroll through the various selection options, swipe to the left or right on the display.
   - Swipe right or left to scroll through the menu and other setting options.
   - Swipe down or up to scroll through selection lists.
2. To select a function, press the function on the display.
✔ Depending on the function, possible setting values or other tiles are available for selection.
3. To go back to a setting if necessary, press ⮌.
4. To change the setting values, use the digital setting ring:
   - Swipe over the setting ring clockwise or anticlockwise, as required.
   - Or press a specific position on the setting ring.
   - Or, as soon as the setting ring is pressed, press the symbol that appears ⊞ and enter the value directly via the number field.
5. Use ✓ to confirm the setting.
6. Press start stop to start the operation.
7. If the operation is ended:
   - If required, you can select other settings and restart the operation.
   - When the food is ready, use ⏻ to switch the appliance off.

Note: You can save your settings as "Favourites" ☆ and use these again.
→ *"Favourites", Page 14*

8.6 Extending an operation

If an operation has ended, you can extend the operation or select other settings and restart it.

1. Press "Add extra cooking time".
   - Depending on the operating mode, you can change the settings if required.
2. Press start stop to start the operation.

8.7 Filling the water tank

The water tank is located next to the cooking compartment. You will need to fill the water tank before starting any operation that uses steam.

⚠ **WARNING – Risk of scalding!**
Hot steam may escape when you open the appliance door. Steam may not be visible, depending on the temperature.
- When opening the door, do not stand too close to the appliance.
- Open the appliance door carefully.
- Keep children at a safe distance.

The water in the evaporator dish is still hot even after the appliance has been switched off.
- Never empty the evaporator dish immediately after switching off the appliance.
- Allow the appliance to cool down before cleaning.

When you open the appliance door, hot water may flow out of the appliance.
- When opening the door, do not stand too close to the appliance.
- Open the appliance door carefully.
- Keep children away from the appliance.
- If the evaporator dish overflows, do not pour more water into the water tank.

ATTENTION
Using unsuitable liquids may damage the appliance.
- Do not use any liquids other than water.
- Only use cold, fresh tap water, softened water or non-carbonated mineral water.

Requirement: The water hardness range is set correctly.

1. Open the appliance door.
2. Remove the water tank from the tank recess.

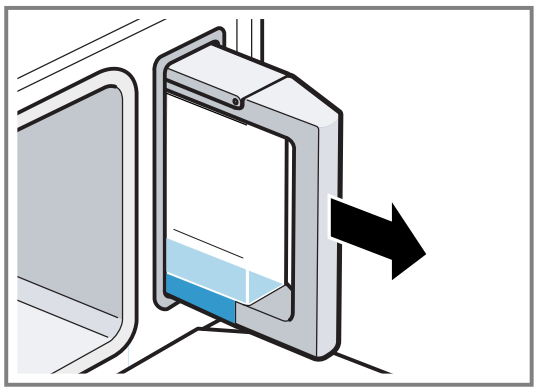

3. Open the tank cover.
4. Fill the water tank with cold water up to the **max.** mark.

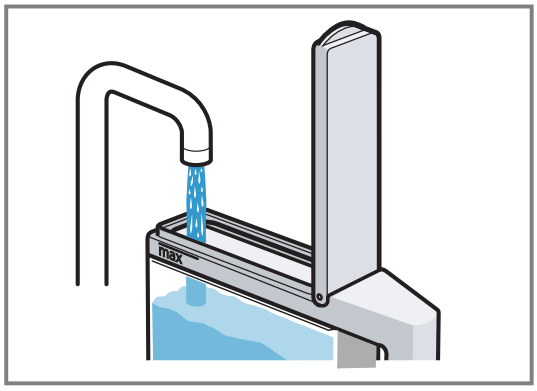

5. Close the tank lid.
6. Insert the full water tank back into the tank recess.

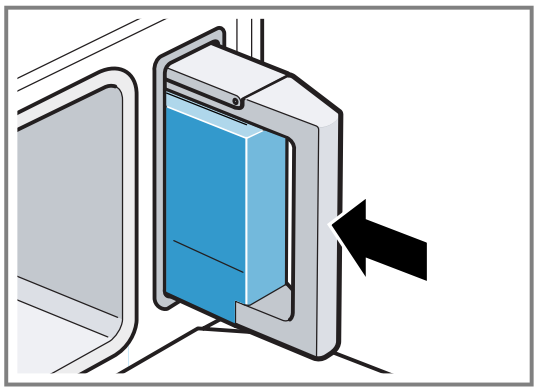

7. Check that the water tank is flush with the water tank recess.

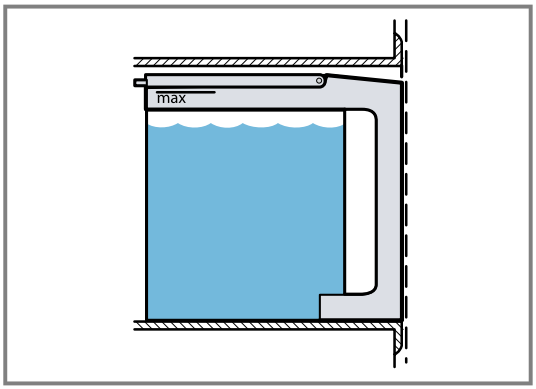

8. Close the appliance door.

8.8 Refilling the water tank

If the water tank runs dry during operation, steaming will be paused.

1. Open the appliance door carefully.
2. Remove the water tank from the tank recess.
3. Fill the water tank with water.
4. Insert the full water tank back into the tank recess.
5. Close the appliance door.

8.9 Setting the type of heating and the temperature

1. Press the type of heating that you want to use.
2. Press the temperature in °C or, depending on the type of heating, the setting.
3. Use the setting ring to set the temperature.
4. Press ✓ on the display to confirm the set temperature.
   If required, you can implement additional settings:
   – Time-setting options
5. Press start stop to start the operation.
✔ The appliance starts heating.
✔ The setting values and how long the appliance has already been in operation are shown on the display.
6. When the food is ready, use ⏻ to switch the appliance off.

Note: The most suitable type of heating for your food can be found in the description of the type of heating.
→ *"Types of steam heating", Page 6*

Changing the type of heating

When you change the type of heating, the other settings are also reset.

1. Press start stop.
2. Press ⮌.
3. Press the type of heating that you want to use.
4. Reset the operation and use start stop to start.

Changing the temperature

Once the operation has started, you can change the temperature at any time.

1. Press ⌃ on the display.
2. Press the temperature.
3. Change the temperature with the setting ring.
4. To confirm the change, press ✓ on the display.
✔ The change is applied.

8.10 “Fill water tank” message

If you select a type of heating and the water tank is only half full, the appliance displays the message "Fill water tank".
If the water tank contains sufficient water for cooking, start the appliance.
If the water tank does not contain sufficient water for cooking, fill the water tank.
→ *"Filling the water tank", Page 10*

8.11 After using the Steam function

When you use the appliance, moisture and food remnants remain in the cooking compartment afterwards. Dry and clean the appliance after each use. Empty the water tank.

After using the Steam function

1. Dry the cooking compartment.
   → *"Drying the cooking compartment", Page 19*
2. Empty the water tank.
   → *"Emptying the water tank", Page 19*

8.12 Displaying information

In most cases, you can call up information about the function that you have just started. The appliance automatically displays certain information, e.g. to ask you to do/confirm something or to issue a warning.

1. Press ⓘ "Info".
✔ Information is displayed for a few seconds.
2. To scroll through lots of content in the message, swipe over the display.
3. If necessary, use ⮌ to exit the message.

9 Time-setting options

For an operation, you can set the cooking time and the time at which the operation should be finished. The timer runs independently of the operation.

Time-setting option	Use
Cooking time ⏲	If you set a cooking time, the appliance stops heating automatically once this time has elapsed.

Time-setting option	Use
End time ⏲	Along with the cooking time, you can set the time at which you want the operation to end. The appliance starts up automatically so that the operation finishes at the required time.
Timer ⌛	You can set the timer to run independently of the appliance during operation. It does not affect the appliance.

9.1 Setting the cooking time

You can set the cooking time for the operation up to 24 hours.

Requirement: An operating mode and temperature have been set.

1. Press ⏱ "Cooking time".
2. To set the cooking time, press the relevant time value, e.g. hour display "h" or minute display "m".
✔ The selected value is marked in blue.
3. Use the setting ring to set the cooking time.
If required, use ↺ to reset the setting value.
4. To confirm the set cooking time, press ✓ on the display.
5. Press start stop to start the operation.
✔ The appliance starts to heat and the cooking time counts down.
✔ When the time has elapsed, a signal sounds. A notification appears on the display confirming that the operation has finished.
6. Once the cooking time has elapsed:
   - If required, you can select other settings and restart the operation.
   - When the food is ready, use ⏻ to switch the appliance off.

Changing the cooking time

You can change the cooking time at any time.

1. Press ⌃ on the display.
2. Press the cooking time ⏱.
3. Use the setting ring to change the cooking time.
4. To confirm the change, press ✓ on the display.
✔ The change is applied.

Cancelling the cooking time

You can cancel the cooking time at any time.

1. Press ⌃ on the display.
2. Press the cooking time ⏱.
3. Reset the cooking time using ↺.
Note: For operating modes that always require a cooking time, the appliance resets the cooking time to the preset value.
4. To confirm the change, press ✓ on the display.
✔ The change is applied.

9.2 Setting the end time

You can delay the time at which the cooking time for the operation is due to end by up to 24 hours.

Notes

- To achieve good cooking results, do not delay the time once the operation has already started.
- Food will spoil if you leave it in the cooking compartment for too long.

Requirements

- An operating mode and temperature have been set.
- A cooking time is set.

1. Press ⏲"End time".
2. To set the time, press the hour display or the minute display.
✔ The selected value is marked in blue.
3. Use the setting ring to delay the time.
If required, use ↺ to reset the setting value.
4. To confirm the set time, press ✓ on the display.
5. Press start stop to start the operation.
✔ The display shows the time remaining until the operation starts.
✔ Once the start time has been reached, the appliance starts heating and the cooking time starts counting down.
✔ When the time has elapsed, a signal sounds. A notification appears on the display confirming that the operation has finished.
6. Once the cooking time has elapsed:
   - If required, you can select other settings and restart the operation.
   - When the food is ready, use ⏻ to switch the appliance off.

Changing the end time

To achieve good cooking results, only change the set time before the operation starts and before the cooking time starts counting down.

1. Press ⌃ on the display.
2. Press the end time ⏲.
3. Use the setting ring to change the end time.
4. To confirm the change, press ✓ on the display.
✔ The change is applied.

Cancelling the end time

You can delete the set end time at any time.

1. Press ⌃ on the display.
2. Press the end time ⏲.
3. Use ↺ to reset the end time.
Note: For operating modes that always require a cooking time, the appliance resets the time at which the cooking time ends to the next possible time.
4. To confirm the change, press ✓ on the display.
✔ The change is applied.

9.3 Setting the timer

The timer runs independently during the operation. You can set the timer for up to 24 hours. The timer has its own signal so that you can tell whether it is the timer or a cooking time that has elapsed.

1. Press ⌛.
2. To set the timer, press the relevant time value on the display, e.g. minute display "m" or second display "s".
✔ The selected value is marked in blue.
3. Set the timer using the setting ring.
If required, use ↺ to reset the setting value.

4. To start the timer, press ▷ on the display.
✔ The timer counts down.
✔ The timer remains visible on the display if the appliance is switched off.
✔ When the appliance is switched on, the display shows the settings for the current operation. The timer is displayed in the status display.
✔ Once the timer has elapsed, a signal sounds. A notification appears on the display confirming that the timer has finished.

Changing the timer

You can change the timer at any time.

1. If the timer is running in the background, use ⧖ to select the timer beforehand.
2. Press ||.
3. Change the timer using the setting ring.
4. Press ▷ to confirm.

Cancelling the timer

You can cancel the timer at any time.

1. If the timer is running in the background, use ⧖ to select the timer beforehand.
2. Press ||.
3. Reset the timer using ↺.Reset the timer using .

10 Dishes

You can use "Dishes" mode to very easily cook food. The appliance will choose the optimal setting for you.

10.1 Setting a dish

1. Press "Dishes" in the menu.
2. Press the required dish.
✔ The settings for the dish appear on the display.
3. Adjust the settings if required.
   You can adjust only certain settings depending on the dish.
4. For information about the accessory and shelf position, for example, press ⓘ"Info".
5. Press start/stop to start the operation.
✔ Once the dish is ready, a signal sounds. The appliance stops heating.
6. Once the cooking time has elapsed:
   - If required, you can select other settings and restart the operation.
   - When the food is ready, use ⏻ to switch the appliance off.

10.2 Setting a later end time

You can set a later end time for certain dishes.

Requirements

- A dish is selected.
- Operation has not begun.

1. Press ⏲.
2. Use the setting ring to set the end time.
3. Press start/stop to start the operation.
✔ The start time appears on the display.
✔ Once the start time has been reached, the appliance starts heating and the cooking time starts counting down.
✔ When the time has elapsed, a signal sounds. The time shown on the display is zero.

Note: You cannot change the end time later on.

10.3 Cancelling settings

The settings cannot be changed once cooking is in progress.

- To delete all settings, press ⏻ to switch the appliance off.
✔ All settings are now deleted. You can configure new settings.

10.4 Overview of the dishes

You can find out which individual dishes are available to you on the appliance when you call up the operating mode.
The dishes are sorted by category and food.

Food

- "Steamed chicken breast fillet"
  "Fish, whole, steam"
  "Fish fillet, fresh, steamed"
  "Mixed vegetables, frozen"
  "Unpeeled boiled potatoes, med."
  "Basmati rice"
  "Brown rice"
  "Couscous"
  "Steamed cauliflower florets"
  "Steamed broccoli florets"
  "Steamed green beans"
  "Sliced carrots, steamed"
  "Lentils"
  "Eggs, hard-boiled"
  "Eggs, soft-boiled"
  "Rice pudding"
  "Fruit compote"
  "Yoghurt in glass jars"
  "Disinfect bottles"
  "Reheat side dishes"

10.5 Cooking instructions for dishes

Follow the instructions shown on your appliance. Proceed in accordance with this information when you are cooking dishes.

- All programmes are designed for cooking on one level. Cooking times may vary depending on the quantity and quality of the ingredients.

Amount/weight

- Do not fill the food more than 4 cm deep in the accessory.
  Do not exceed the recommended maximum weight.

Accessory/cookware

- Note the information about the accessories in the recommended settings.
  → *"How it works", Page 24*

When cooking food in the perforated steaming tray, insert the unperforated steaming tray below it in position 1. This will catch any liquid that drips down.

Cereal products or lentils

Weigh the food and add the correct ratio of water:
- Basmati rice 1:1.5
- Couscous 1:1
- Brown rice 1:1.5
- Lentils 1:2

- Stir cereal products after cooking so that the remaining water is more quickly absorbed.

Fish

- Grease the perforated steaming tray.
  Do not place fish or fish fillets on top of each other.
  Select fish or fish fillets that are as similar in size as possible.
  Enter the weight of the heaviest fish.

Eggs

- Pierce eggs before cooking.
  Do not place eggs on top of each other.

Chicken breast

- Do not place chicken breasts on top of each other.

Vegetables

- Do not season vegetables until after cooking.
  Do not use frozen products that are covered with a thick layer of ice. Remove any ice on the food.
  Always distribute the food evenly in the cookware. It will not cook evenly if the food is piled up to varying heights.

Making yoghurt

1. Heat the milk to 90 °C on the hob.
   If you are using long-life milk, 40 °C is sufficient.
2. Allow the milk to cool to 40 °C.
3. Mix 150 g of chilled yoghurt into the milk.
4. Pour the mixture into cups or small jars and cover with cling film.
5. Place the cups or jars onto a steaming tray.
6. Observe the information in the overview of dishes and start the programme.
7. After making the yoghurt, leave it to cool in the refrigerator.

Making rice pudding

1. Weigh the rice.
2. Add 2.5 times the amount of milk.
3. Pour the rice and milk into the accessory until you have a mixture that is no more than 2.5 cm deep.
4. Observe the information in the overview of dishes and start the programme.
5. Stir the rice after cooking.

✔ The rice pudding will absorb the remaining milk.

Making fruit compote

The programme is only suitable for fruits with stones and pips.

1. Weigh the fruit.
2. Add approx. 1/3 of the amount of water.
3. Add sugar and spices to taste.
4. Observe the information in the overview of dishes and start the programme.

Disinfecting bottles

You can use your appliance to disinfect bottles. The process is equivalent to normal sterilisation by boiling.

1. Clean the bottles with a bottle brush immediately after use.
2. Wash the bottles in the dishwasher.
3. Place the bottles into the perforated steaming tray such that they do not touch one another.
4. Observe the information in the overview of dishes and start the programme.
5. Dry the bottles with a clean cloth.

11 Favourites

In the "Favourites", you can save your settings and use these again.

Note: Depending on the appliance type/software status, you must first download this function to your appliance. You can find more information in the Home Connect app.

11.1 Saving favourites

You can save up to 10 different operating modes as your favourites.

▸ To save an operating mode as a favourite, you must use the Home Connect app. When your appliance is connected, follow the instructions in the app.

11.2 Selecting favourites

If you have saved favourites, you can use these to set the operation.

1. Press "Favourites" in the menu.
2. Press the required favourite.
3. If required, you can change the settings.
4. Press start stop to start the operation.

✔ The setting values are shown on the display.

11.3 Changing favourites

You can change, sort or delete your saved favourites at any time.

▸ To change the favourites, you must use the Home Connect app. When your appliance is connected, follow the instructions in the app.

12 Childproof lock

You can secure your appliance to prevent children from accidentally switching it on or changing the settings.

12.1 Activating the childproof lock

The childproof lock can be activated regardless of whether the appliance is on or off.

- ▸ Press and hold ⚿ for approx. 4 seconds to activate the childproof lock.
- ✔ A confirmation notification appears on the display.
- ✔ The control panel is now locked. The appliance can only be switched off using ⏻.
- ✔ When the appliance is switched on, ⚿ lights up. When the appliance is switched off, ⚿ does not light up.

12.2 Deactivating the childproof lock

You can deactivate the childproof lock at any time.

1. Press anywhere on the display.
2. To deactivate the childproof lock:
   - ▸ Follow the instructions on the display so that the graphic on the ring fills up completely.
   - ▸ Alternatively, press and hold ⚿ for approximately 4 seconds.
- ✔ A confirmation message appears on the display.

13 Basic settings

You can configure the basic settings for your appliance to meet your needs.

13.1 Overview of the basic settings

Here you can find an overview of the basic settings and factory settings. The basic settings depend on the features of your appliance.
You can find more information about the individual basic settings on the display using ⓘ.

Basic settings	Selection
Language	See selection on appliance
Home Connect	Connect the oven to a mobile device and remotely control it. → *"Home Connect ", Page 16*
Clock	Time in 24-hour format
Date	Date in the format DD.MM.YYYY

Display	Selection
Brightness	▪ Levels 1, 2, 3, 4 and 5 [1]
Clock display	▪ On for a limited time ▪ On (this setting increases energy consumption) ▪ Off [1]
Clock type	▪ Digital + date [1] ▪ Digital ▪ Analogue + date
Alignment	▪ Align the display horizontally and vertically

Tone	Selection
Button tone	▪ On [1] ▪ Off
Signal tone	▪ Very short duration ▪ Short duration ▪ Medium duration [1] ▪ Long duration

Appliance settings	Selection
Fan run-on time	▪ Minimum ▪ Recommended [1] ▪ Long ▪ Very long
Lighting	▪ On when cooking and when opening the door [1] ▪ Only when the door is opened ▪ Always off
Water hardness	▪ 4 (very hard) [1] ▪ 3 (hard) ▪ 2 (medium) ▪ 1 (soft) ▪ 0 (softened)

Personalisation	Selection
Brand logo	▪ Display [1] ▪ Do not display
Operation after switch-on	▪ Main menu [1] ▪ Steaming ▪ Dishes ▪ Favourites
Regional dishes	▪ All [1] ▪ European dishes ▪ British dishes
Childproof lock	▪ Keylock only [1] ▪ Deactivated

Factory settings	Selection
Factory settings	▪ Restore
Appliance information	Appliance information

[1] Factory setting (may vary according to model)

13.2 Changing the basic settings

1. Press "Basic settings" in the menu.
2. Press the required basic settings area.
3. Press the required basic setting.
4. Press to select the required basic setting.
✔ The change is applied directly for most basic settings.
5. To change additional basic settings, use ⮌ to go back and select a different basic setting.
6. To exit the basic settings, use ⌂ to go back to the main menu or switch off the appliance using ⏻.
✔ The changes are saved.

Note: Your changes to the basic settings will be retained even after a power failure.

14 Home Connect

This appliance is network-capable. Connecting your appliance to a mobile device lets you control its functions via the Home Connect app, adjust its basic settings and monitor its operating status.
The Home Connect services are not available in every country. The availability of the Home Connect function depends on the availability of the Home Connect services in your country. You can find information about this at: *www.home-connect.com*.
The Home Connect app guides you through the entire login process. Follow the instructions, noting the information in the Home Connect app.

Notes

- Please note the safety precautions in this instruction manual and make sure that they are also observed when operating the appliance via the Home Connect app.
  → *"Safety", Page 2*
- Operating the appliance on the appliance itself always takes priority. During this time it is not possible to operate the appliance using the Home Connect app.
- In networked standby mode, the appliance requires a maximum of 2 W.

14.1 Setting up Home Connect

Requirements

- The appliance is connected to the power supply and is switched on.
- You have a mobile device with a current version of the iOS or Android operating system, e.g. a smartphone.
- The appliance is receiving signals from the WLAN home network (Wi-Fi) at its installation location.
- The mobile device and the appliance are within range of your home network's Wi-Fi signal.

1. Scan the following QR code.

   You can install the Home Connect app and connect your appliance via the QR code.
2. Follow the instructions in the Home Connect app.

14.2 Home Connect settings

You can adjust the Home Connect settings and network settings in your appliance's basic settings.
Which settings the display shows will depend on whether Home Connect has been set up and whether the appliance is connected to your home network.

Basic setting	Possible settings	Explanation
Home Connect assistant	Start the assistant Disconnect	You can connect your appliance to the Home Connect app via the Home Connect assistant. **Note:** If you are using the Home Connect assistant for the first time, only the "Start assistant" setting is available.
Wi-Fi	On Off	You can use the Wi-Fi to switch off the network connection for your appliance. When you have connected successfully once, you can deactivate the Wi-Fi and not lose your detailed data. As soon as you activate Wi-Fi again, the appliance connects automatically. **Note:** In networked standby mode, the appliance requires a maximum of 2 W.
Remote control status	Monitoring Manual remote start Permanent remote start	During monitoring, you can only view the operating status of the appliance in the app. If you convert from monitoring or permanent remote start to manual remote start, you must activate the remote start each time. You can open the appliance door within 15 minutes of having activated remote start. Remote start will not be deactivated by this. Once 15 minutes have elapsed, opening the appliance door will deactivate manual remote start.

Basic setting	Possible settings	Explanation
		For permanent remote start, you can start and operate the appliance remotely at any time. If you often operate the appliance remotely, it is helpful to set the remote start to "Permanent".

14.3 Operating the appliance with the Home Connect app

You can use the Home Connect app to set and start the appliance remotely.

⚠ **WARNING – Risk of fire!**
Combustible objects that are left in the cooking compartment may catch fire.
- Never store combustible objects in the cooking compartment.
- If smoke is emitted, the appliance must be switched off or the plug must be pulled out and the door must be held closed in order to stifle any flames.

Requirements
- The appliance is switched off.
- The appliance is connected to the home network and to the Home Connect app.
- In order to be able to set the appliance via the app, the manual or permanent remote start must be selected in the "Remote control status" basic setting.

1. To activate manual remote start, press ⌂.
   You only have to confirm on the oven if you are switching from monitoring or permanent remote start to manual remote start.
   With permanent remote start, you do not need to confirm on the oven.
2. Configure a setting in the Home Connect app and send it to the appliance.

   Notes
   - When you start the oven using the controls on the appliance itself, the remote start function is activated automatically. You can use the Home Connect app to adjust the settings or start a new programme.
   - You can open the appliance door within 15 minutes of having activated remote start. Remote start will not be deactivated by this. Once 15 minutes have elapsed, opening the appliance door will deactivate manual remote start.

14.4 Software update

Your appliance's software can be updated using the software update function, e.g. for the purposes of optimisation, troubleshooting or security updates. This may lead to minor changes of visualizations and operation in the display.
To do this, you must be a registered Home Connect user, have installed the app on your mobile device and be connected to the Home Connect server.
As soon as a software update is available, you will be informed via the Home Connect app and will be able to start the software update via the app. Once the update has been successfully downloaded, you can start installing it via the Home Connect app if you are in your home network (Wi-Fi). The Home Connect app informs you once installation is successful.
You can find the current software version in the Home Connect app under the appliance information for the appliance.

Notes
- The software update consists of two steps.
  - The first step is the download.
  - The second step is the installation on your appliance.
- You can continue to use your appliance as normal while updates are downloading. Depending on your personal settings in the app, software updates can also be set to download automatically.
- Installation takes a few minutes. You cannot use your appliance during installation.
- We recommend that you install security updates as soon as possible.

14.5 Remote diagnostics

Customer Service can use Remote Diagnostics to access your appliance if you contact them, have your appliance connected to the Home Connect server and if Remote Diagnostics is available in the country in which you are using the appliance.

Tip: For further information and details about the availability of Remote Diagnostics in your country, please visit the service/support section of your local website: *www.home-connect.com*.

14.6 Data protection

Please see the information on data protection.

The first time your appliance is registered on a home network connected to the Internet, your appliance will transmit the following types of data to the Home Connect server (initial registration):
- Unique appliance identification (consisting of appliance codes as well as the MAC address of the installed Wi-Fi communication module).
- Security certificate of the Wi-Fi communication module (to ensure a secure data connection).
- The current software and hardware version of your appliance.
- Status of any previous resetting to factory settings.

This initial registration prepares the Home Connect functions for use and is only required when you want to use the Home Connect functions for the first time.

Note: Please note that the Home Connect functions can only be utilised with the Home Connect app. Information on data protection can be retrieved in the Home Connect app.

15 Cleaning and servicing

15.1 Cleaning agents

Only use cleaning agents that are suitable for the different surfaces on your appliance.

⚠ **WARNING – Risk of electric shock!**
An ingress of moisture can cause an electric shock.
- Do not use steam- or high-pressure cleaners to clean the appliance.

ATTENTION
Unsuitable cleaning products may damage the surfaces of the appliance.
- Do not use harsh or abrasive detergents.
- Do not use oven cleaner.
- Do not use limescale remover on the door handle or control panel, as it may leave permanent staining.
- Do not use corrosive or harsh cleaning products or products containing chlorine.
- Salts are very corrosive and can cause rusting. Remove the remnants of any acidic sauces or salted food from the cooking compartment immediately once it has cooled.
- Do not use cleaning products with a high alcohol content.
- Do not use hard scouring pads or cleaning sponges.

Appliance front

Surface	Cleaning agent	Information
Stainless steel	Soapy water Special stainless steel cleaner	After cleaning the surface, dry it with a soft cloth. To prevent corrosion, remove any patches of limescale, grease, starch or albumin (e.g. egg white) from stainless steel surfaces immediately.

Appliance interior

Cooking compartment with evaporator dish	Hot soapy water Vinegar solution	Use the cleaning sponge provided or a soft washing-up brush to clean the cooking compartment and evaporator dish with hot, soapy water or a vinegar solution.
Accessories	Hot soapy water Vinegar solution	Soak accessories in hot, soapy water and then clean with a brush or washing-up sponge. Alternatively, accessories can be cleaned in the dishwasher. If an accessory is exhibiting significant discolouration, clean it with a vinegar solution.
Water tank	Soapy water	Do not clean the water tank in the dishwasher.
Tank recess		Wipe dry after every use.
Seal in the water tank lid		Wipe dry after every use.

Appliance door

Door panels	Glass cleaner	After cleaning the surface, dry it with a soft cloth.
Door seal	Hot soapy water	

15.2 Microfibre cloth

The microfibre cloth removes liquids and grease.

This microfibre cloth has a honeycomb structure and is suitable for cleaning delicate surfaces such as the following:
- Glass
- Glass ceramic
- Stainless steel
- Aluminium

You can buy the microfibre cloth from customer service, from specialist retailers or online.

15.3 Cleaning sponge

Use the absorbent cleaning sponge only for cleaning the cooking compartment and for removing residual water from the evaporator dish.

Wash the cleaning sponge thoroughly before use.
You can wash the cleaning sponge in the washing machine using a hot wash program.
You can buy the cleaning sponge from customer service, from specialist retailers or online.

15.4 Drying the cooking compartment

⚠ **WARNING – Risk of scalding!**
Hot steam may escape when you open the appliance door. Steam may not be visible, depending on the temperature.
- When opening the door, do not stand too close to the appliance.
- Open the appliance door carefully.
- Keep children at a safe distance.

The water in the evaporator dish is still hot even after the appliance has been switched off.
- Never empty the evaporator dish immediately after switching off the appliance.
- Allow the appliance to cool down before cleaning.

1. Leave the appliance door ajar until the appliance has cooled down.
2. Clean any food remnants from the cooking compartment.
3. Once it has cooled down, wipe down the cooking compartment and the evaporator dish with the cleaning sponge, and dry thoroughly with a soft cloth.
4. If condensation has formed on the front panels, dry them.

15.5 Emptying the water tank

ATTENTION
Drying the water tank in the hot cooking compartment leads to damage to the water tank.
- Do not dry the water tank in the hot cooking compartment.

Cleaning the water tank in the dishwasher will damage it.
- Do not clean the water tank in the dishwasher.
- Clean the water tank with a soft cloth and standard washing-up liquid.

1. Open the appliance door.
2. Remove the water tank and empty out the remaining water.
3. Dry the seal in the tank lid and the tank recess in the appliance.
4. Slot the water tank back into the water tank recess.
5. Close the appliance door.

15.6 Descaling

To ensure that your appliance continues to operate correctly, it must be descaled regularly. How often you need to descale your appliance depends on the hardness of the water used.

Notes
- If you press start stop while the descaling process is in progress, the process stops and the appliance shuts down. When you switch the appliance back on, you will need to rinse it twice in order to remove any remaining descaling solution. During the second rinse cycle, the appliance is locked against being used for other applications.
- The appliance indicates when only another 5 or fewer steam-assisted operations are possible. If you do not carry out descaling, you can no longer set any operation with steam.

Step	Duration
Descaling →*Page 19*	Approx. 34 min
First rinse cycle	2 min
Second rinse cycle	2 min

Starting the descaling process

It takes approx. 30 minutes to descale your appliance.

ATTENTION
The length of time for which the descaler is left to work is based on the recommended, liquid descaler. Other descalers may damage the appliance.
- Only use the liquid descaler recommended by us for the descaling programme.

If descaling solution comes into contact with the control panel or other delicate surfaces, it will damage them.
- Remove descaling solution immediately with water.

1. Mix descaler with water to make a descaling solution:

Descaler version	Descaler	Water
Bottle capacity 500 ml	60 ml	300 ml
Bottle capacity 250 ml	125 ml	250 ml

2. Remove the water tank.
3. Fill the water tank with the descaling solution.
4. Slide the water tank all the way into the appliance.
5. Close the appliance door.
6. Press ⏻
7. Select "Cleaning".
8. Press start stop.

Running the rinse cycle

1. Remove the descaling solution from the evaporator dish using the cleaning sponge provided and then thoroughly rinse the cleaning sponge with water.
2. Remove the water tank and rinse it thoroughly.
3. Fill the water tank with water and then slide it back into the appliance.
4. Close the appliance door.
✔ The appliance rinses itself for 4 minutes.
5. Open the appliance door.
6. Remove the remaining water from the evaporator dish using the cleaning sponge.
7. Proceed to the second rinse cycle.
8. Remove the water tank and empty out the remaining water.
9. Thoroughly rinse the water tank and fill it with fresh water.
10. Reinsert the water tank.
11. Close the appliance door.
12. Press start stop.
✔ The appliance rinses itself for 2 minutes.
13. Remove the remaining water from the evaporator dish using the cleaning sponge.

14. Wipe down the cooking compartment using the cleaning sponge and then dry with a soft cloth.
15. Switch off the appliance.
✔ The appliance is ready for use again.

15.7 Appliance door

To clean the appliance door thoroughly, you can disassemble the appliance door.

Detaching the appliance door

⚠ **WARNING – Risk of injury!**
Components inside the appliance door may have sharp edges.
▸ Wear protective gloves.
The hinges on the appliance door move when the door is opened and closed, which could trap your fingers.
▸ Keep your hands away from the hinges.

1. Open the appliance door fully.
2. ⚠ **WARNING – Risk of injury!**
   When the hinges are not secured, they can snap shut with great force.
   ▸ Make sure that the locking levers are always either fully closed or (when detaching the oven door) fully open.

   Open the locking levers on the left- and right-hand hinges.

Locking levers opened	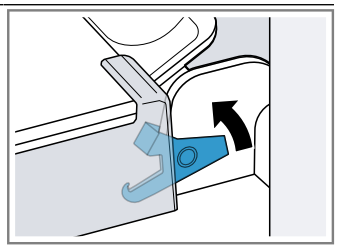 The hinge is now secured and cannot snap shut.
Locking levers closed	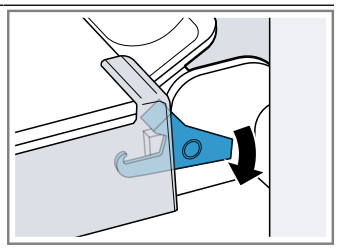 The appliance door is secured and cannot be detached.

✔ The locking levers are open. The hinges are now secured and cannot snap shut.

3. Close the appliance door fully ①. Grab hold of the appliance door with both hands (on the left and right) and pull it upwards and out ②.

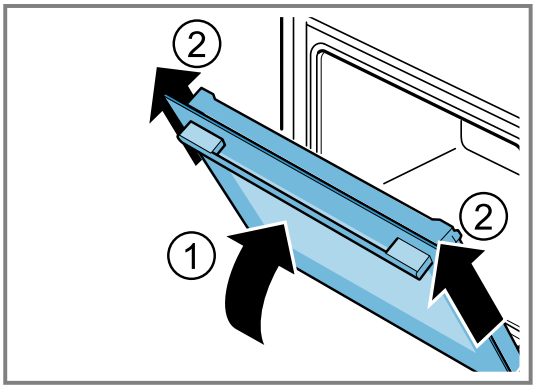

4. Carefully place the appliance door on a level surface.

Attaching the appliance door

⚠ **WARNING – Risk of injury!**
The hinges on the appliance door move when the door is opened and closed, which could trap your fingers.
▸ Keep your hands away from the hinges.
When the hinges are not secured, they can snap shut with great force.
▸ Make sure that the locking levers are always either fully closed or (when detaching the oven door) fully open.

1. Slide the appliance door straight onto the two hinges ①. Slide the appliance door on as far as it will go.
2. Open the appliance door fully.
3. Close the locking levers on the left- and right-hand hinges ②.

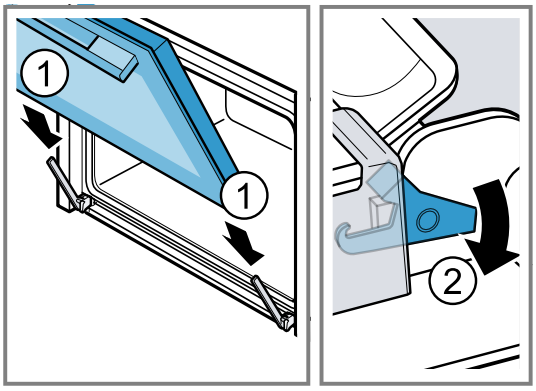

✔ The locking levers are closed. The appliance door is secured and cannot be detached.
4. Close the appliance door.

Removing the door panes

⚠ **WARNING – Risk of injury!**
The hinges on the appliance door move when the door is opened and closed, which could trap your fingers.
▸ Keep your hands away from the hinges.
Components inside the appliance door may have sharp edges.
▸ Wear protective gloves.

1. Open the appliance door fully.

2. Open the locking levers on the left- and right-hand hinges ①.
✔ The locking levers are open. The hinges are now secured and cannot snap shut.
3. Close the appliance door fully ②.

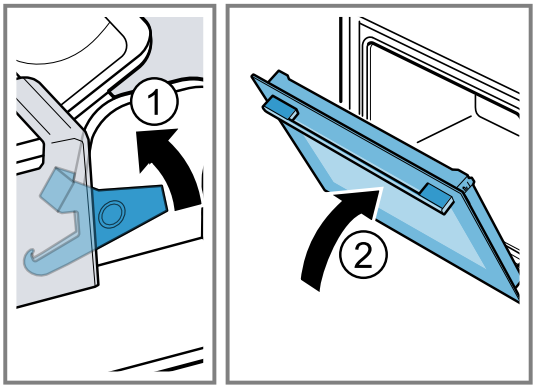

4. Push on the left- and right-hand side of the door cover from the outside ① until it is released.
5. Remove the door cover ②.

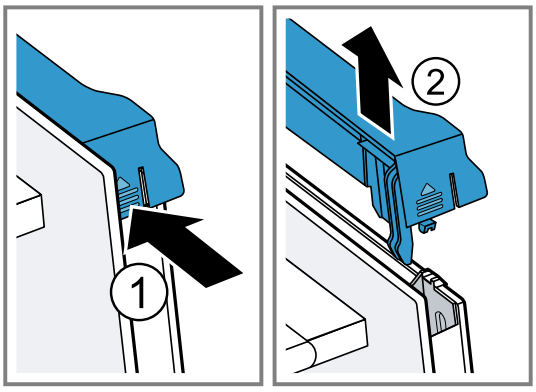

6. Lift out the inner pane and set it down carefully on a flat surface.

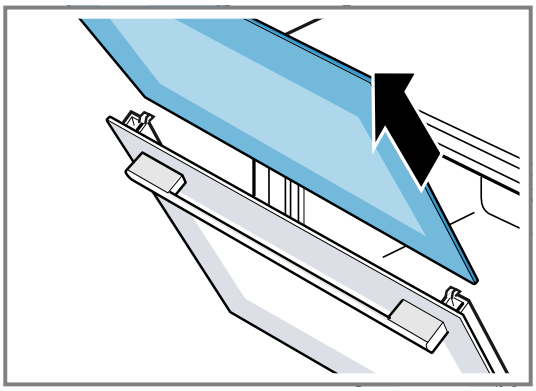

7. If necessary, you can remove the condensate trough for cleaning.
   ▸ Open the appliance door.
   ▸ Tilt the condensate trough upwards and remove it.

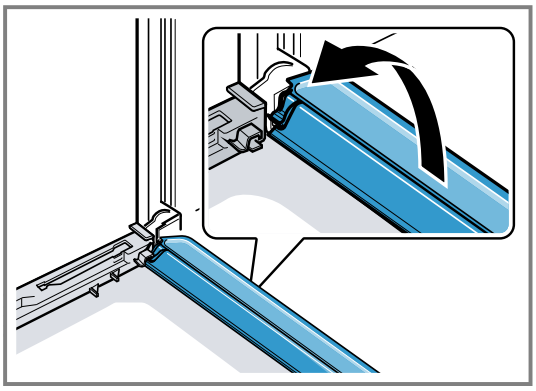

8. ⚠ **WARNING – Risk of injury!**
   Scratched glass in the appliance door may develop into a crack.
   ▸ Do not use any harsh or abrasive cleaners or sharp metal scrapers to clean the glass on the oven door, as they may scratch the surface.

   Clean the removed door panels on both sides with glass cleaner and a soft cloth.
9. Clean the condensate trough with a cloth and hot soapy water.
10. Clean the appliance door.
    → *"Cleaning agents", Page 18*
11. Dry the door panels and refit them.
    → *"Fitting the door panes", Page 21*

Fitting the door panes

⚠ **WARNING – Risk of injury!**
The hinges on the appliance door move when the door is opened and closed, which could trap your fingers.
▸ Keep your hands away from the hinges.
Components inside the appliance door may have sharp edges.
▸ Wear protective gloves.

1. Open the appliance door fully.
2. Place the condensate trough vertically into the retainer ⓐ and turn it downwards.

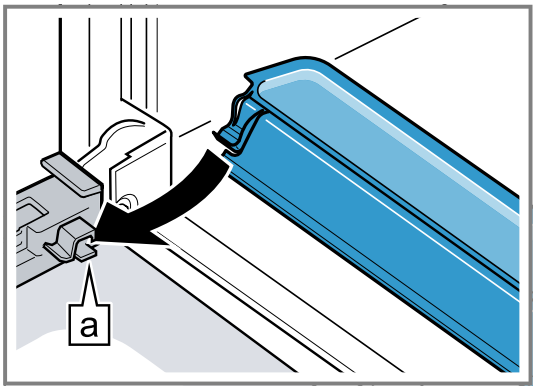

3. **Note:** When sliding the pane in, ensure that the glossy side of the pane is on the outside and the cutouts on the left and right are at the top.

Slide the inner pane into the left- and right-hand retainers ⓐ.

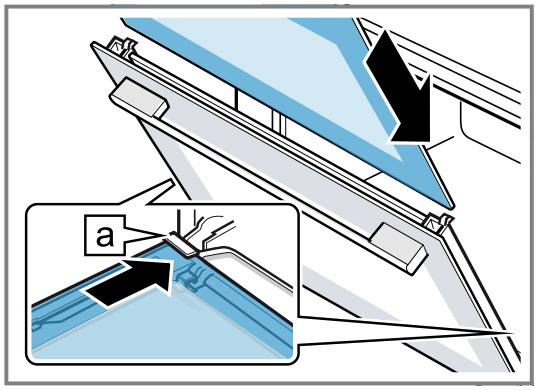

4. Push the inner pane upwards until it is in the left- and right-hand retainers ⓐ.

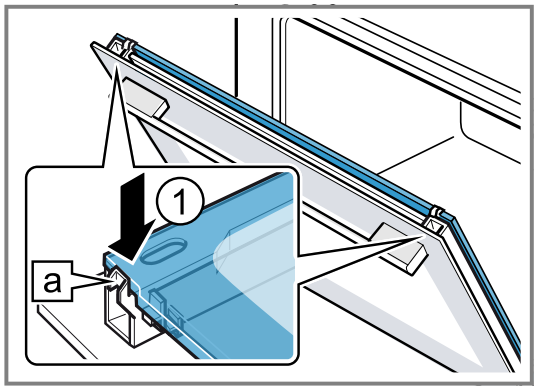

5. Put the door cover into position ① and push down on it until you hear it click into place.
6. Open the appliance door fully.
7. Close the locking levers on the left- and right-hand hinges ②.

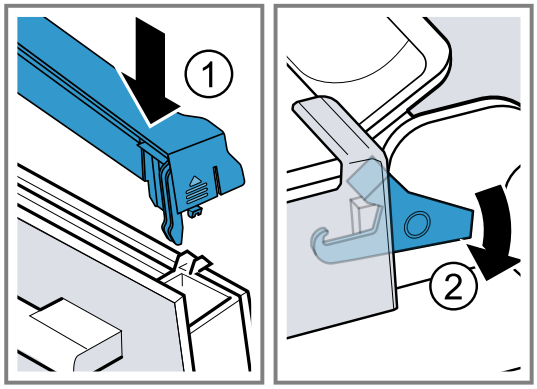

✔ The locking levers are closed. The appliance door is secured and cannot be detached.

8. Close the appliance door.

Note: Do not use the cooking compartment again until the door panes have been correctly fitted.

16 Troubleshooting

You can rectify minor faults on your appliance yourself. Read the troubleshooting information before contacting after-sales service. This will avoid unnecessary costs.

Tip: Permanently connect your appliance to the Home Connect app to automatically receive software updates. This allows errors to be eliminated, performance to be improved and new functions to be made available.

⚠ **WARNING – Risk of injury!**
Improper repairs are dangerous.
- Repairs to the appliance should only be carried out by trained specialist staff.
- If the appliance is defective, call Customer Service.
  → *"Customer Service", Page 32*

⚠ **WARNING – Risk of electric shock!**
Improper repairs are dangerous.
- Repairs to the appliance should only be carried out by trained specialist staff.
- Only use genuine spare parts when repairing the appliance.
- If the power cord or the appliance power cable of this appliance is damaged, it must be replaced with a special power cord or special appliance power cable, which is available from the manufacturer or its Customer Service.
- If the power cord of this appliance is damaged, it must be replaced by trained specialist staff.

16.1 Malfunctions

Fault	Cause and troubleshooting
The appliance is not working.	The circuit breaker in the fuse box has tripped. ▸ Check the circuit breaker in the fuse box.
	There has been a power cut. ▸ Check whether the lighting in your room or other appliances are working.

Fault	Cause and troubleshooting
The appliance is not working.	The mains plug of the power cord is not plugged in. ▸ Connect the appliance to the power supply.
Appliance is switched on but controls not responding; ⚿ appears on the display.	Childproof lock is activated. ▸ Press and hold the ⚿ button until ⚿ goes out on the display.
Appliance does not heat up.	Demo mode is switched on. **1.** Briefly disconnect the appliance from the power supply by switching the circuit breaker in the fuse box off and then on again. **2.** Switch off demo mode in the basic settings within approx. 5 minutes. → *"Changing the basic settings", Page 16*
	There has been a power cut. ▸ Open and close the appliance door once after a power failure. ✔ The appliance is checked and is ready to use.
A message with "D" or "E" appears in the display, e.g. D0111 or E0111.	Malfunction **1.** Switch the appliance off and on again. ✔ If the fault was a one-off, the message disappears. **2.** If the message appears again, call the after-sales service. Please specify the exact error message when calling.
The operation does not start or is interrupted.	Appliance door not fully closed. ▸ Close appliance door.
	Appliance is not active. ▸ Switch the appliance off and then on again.
Appliance prompting you to wipe down cooking compartment and fill water tank.	The power supply has been disconnected or the appliance has been switched off during the descaling process. ▸ When you switch the appliance back on, rinse it twice.
After an operating mode is switched on, a message on the display indicates that the temperature is too high.	Appliance has not cooled down sufficiently. **1.** Allow the appliance to cool down. **2.** Select an operating mode once again.
Buttons are flashing.	Normal occurrence caused by condensation behind the control panel. No action required.
Liquid in evaporator dish completely evaporated even though water tank full.	Water tank not inserted correctly. ▸ Slide the water tank in until it clicks into place.
	Supply line to water tank blocked. **1.** Descale the appliance. **2.** Check and adjust the set water hardness range. ▸ If the orange-coloured plugs are still inserted in the tank guide housing, remove the plugs. The plugs are no longer required.
Water tank emptying for no reason and evaporator dish overflowing.	Water tank not closed properly. ▸ Close water tank lid and press down until it clicks into place.
	Tank lid seal dirty. ▸ Clean the seal.
	Tank lid seal defective. ▸ Buy a new water tank from our after-sales service.
Appliance prompting you to fill water tank even though water tank full.	Water tank not inserted correctly. ▸ Slide the water tank in until it clicks into place.
	Detection system not working. ▸ Call the after-sales service.
Appliance prompting you to fill water tank even though water tank not yet empty/appliance not prompting you to fill water tank even though water tank empty.	Water tank dirty and moving water level indicators jammed. **1.** Shake and clean the water tank. **2.** If the jammed parts cannot be freed, order a new water tank from our after-sales service.
A message that reads "Fill water tank?" appears on the display when the appliance is in operation.	Water tank half full. ▸ For longer operations, completely fill the water tank.

Fault	Cause and troubleshooting
"Appliance heating up" appears on the display but the appliance is not reaching the selected temperature.	Automatic calibration values are not optimal. ▸ Restore the appliance's factory settings and repeat the procedure for initial configuration. ✔ The next time you use the steam function at 100 °C, the calibration runs automatically. This generates more steam.
When cooking with steam, a lot of steam is produced.	The appliance is being automatically calibrated. No action required.
When cooking with steam, a lot of steam is produced and this happens repeatedly.	Appliance unable to calibrate itself automatically if cooking times too short. ▸ Restore the appliance's factory settings and repeat the calibration process.
Steam escaping from ventilation slots during cooking.	This is standard procedure. No action required.
Home Connect is not working properly.	Different causes are possible. ▸ Go to *www.home-connect.com*.

16.2 Replacing defective LED lights

▸ Defective LED lights may be replaced by the manufacturer, their customer service or a qualified technician (electrician) only.

16.3 Replacing the door seal

If the cooking compartment's outer door seal is defective, you must replace the door seal. Replacement seals for your appliance can be obtained from our after-sales service. Specify the E number and FD number of your appliance.

1. Open the appliance door.
2. Remove the old door seal.
3. Push the new door seal in on one side of the cooking compartment and then work it in all the way round. The joint must be at the side.
4. Check that the seal is correctly fitted, especially in the corners.

17 How it works

Here, you can find the ideal settings for various dishes as well as the best accessories and cookware. We have tailored these recommendations to your appliance.

17.1 What is the best way to proceed?

⚠ **WARNING – Risk of scalding!**
Hot steam may escape when you open the appliance door. Steam may not be visible, depending on the temperature.

▸ When opening the door, do not stand too close to the appliance.
▸ Open the appliance door carefully.
▸ Keep children at a safe distance.

Tip
If you are using the appliance for the first time, proceed in accordance with the following basic information:

- → *"Safety", Page 2*
- → *"Saving energy", Page 4*
- → *"Condensation", Page 25*

1. Select a suitable food type from the food overview.

   Tips
   - Your appliance has programmed settings for a selection of food types. If you want to be guided by the appliance, use the programmed dishes →*Page 13*.
   - If you do not find the exact food or application that you want to cook or use, look for a similar dish and use that as a reference.
2. Remove any accessories from the cooking compartment.
3. Select suitable cookware and accessories.
   Use the cookware and accessories listed in the recommended settings.
4. Only preheat the appliance if the recipe or the recommended settings tell you to do so.
5. Use the recommended settings when configuring the appliance settings.
6. When the dish is ready, press ⏻ to switch the appliance off.

17.2 Good to know

The tables below contain a selection of food that can be cooked in your appliance with excellent results. You can use these tables to find out which heating functions, accessories, temperature and cooking time to select. Unless otherwise stated, the information given assumes that the food will be placed in the appliance when the appliance is cold.

Accessories

Use the accessories provided.
When cooking food in the perforated steaming tray, always insert the unperforated steaming tray below it. The unperforated steaming tray will catch any liquid that drips down.

Cookware

When using cookware, always place it in the middle of the perforated steaming tray.
Cookware must be heat- and steam-resistant. Food will take longer to cook if thick-sided cookware is used.

When heating food in a bain marie (e.g. when melting chocolate), cover it with foil.

Cooking time and quantity

When steaming food, cooking times depend on the size of the individual pieces and not on the total quantity. The appliance can steam up to 2 kg of food at a time. Use the individual piece sizes specified in the tables. Larger pieces will take longer to cook and smaller ones will cook more quickly. Cooking time is also influenced by the quality and age of the food. The values quoted can therefore only serve as a guideline.

Distributing food evenly

Always distribute the food evenly in the cookware. It will not cook evenly if the food is piled up to varying heights.

Food that is easily crushed

When placing delicate food that is easily crushed in the steaming tray, do not pile the individual pieces too high. It is better to use two steaming trays instead.

Cooking whole menus

With Steam functions, you can cook whole menus at once without the risk of flavours being transferred from one dish to another.
Place the food with the longest cooking time into the cooking compartment first. Add the rest of the food at the appropriate times. This means that all the food will be ready at the same time.
Cooking whole menus at once extends the total cooking time. This is because a little steam escapes when you open the appliance door and the cooking compartment must heat up again.

Condensation

Condensation can occur in the cooking compartment and on the appliance door when cooking. Condensation is normal and does not adversely affect appliance operation. Wipe away the condensation after cooking.

17.3 Vegetables

Place the vegetables into the perforated steaming tray and insert at position 2. Insert the unperforated steaming tray underneath at position 1. The unperforated steaming tray will catch any liquid that drips down.

Recommended settings for vegetables

Food	Piece size	Accessories/ cookware	Heating function	Temperature in °C	Cooking time in min
Artichokes	Whole	Perforated + unperforated steaming tray		100	20 - 35
Cauliflower	Whole	Perforated + unperforated steaming tray		100	20 - 35
Cauliflower	Florets	Perforated + unperforated steaming tray		100	10 - 15
Broccoli	Florets	Perforated + unperforated steaming tray		100	8 - 10
Peas	-	Perforated + unperforated steaming tray		100	5 - 10
Fennel	Sliced	Perforated + unperforated steaming tray		100	10 - 14
Green beans	-	Perforated + unperforated steaming tray		100	15 - 25
Carrots	Sliced	Perforated + unperforated steaming tray		100	10 - 20
Kohlrabi	Sliced	Perforated + unperforated steaming tray		100	15 - 25
Leek	Sliced	Perforated + unperforated steaming tray		100	6 - 9

Food	Piece size	Accessories/ cookware	Heating function	Temperature in °C	Cooking time in min
Sweetcorn	Whole cob	Perforated + unperforated steaming tray		100	25 - 35
Chard [1]	Shredded	Perforated + unperforated steaming tray		100	8 - 10
Asparagus, green [1]	Whole	Perforated + unperforated steaming tray		100	7 - 12
Asparagus, white [1]	Whole	Perforated + unperforated steaming tray		100	10 - 15
Spinach [1]	-	Perforated + unperforated steaming tray		100	2 - 3
Romanesco	Florets	Perforated + unperforated steaming tray		100	8 - 12
Brussels sprouts	Florets	Perforated + unperforated steaming tray		100	10 - 20
Beetroot	Whole	Perforated + unperforated steaming tray		100	40 - 50
Red cabbage	Shredded	Perforated + unperforated steaming tray		100	25 - 35
White cabbage	Shredded	Perforated + unperforated steaming tray		100	25 - 35
Courgette	Sliced	Perforated + unperforated steaming tray		100	3 - 4
Mangetouts	-	Perforated + unperforated steaming tray		100	8 - 12

17.4 Side dishes and pulses

Recommended settings for cooking side dishes and pulses.

Cooking side dishes and pulses

1. Add the correct amount of water/liquid according to the specified ratio.
   For example: 1:1.5 = add 150 ml liquid for every 100 g rice.
2. Use the recommended settings when configuring the appliance settings.

Recommended settings for cooking side dishes and pulses

Food	Ratio	Accessory/ cookware	Shelf position	Type of heating	Temperature in °C	Cooking time in mins
Unpeeled boiled potatoes (medium-sized)	-	Perforated + unperforated steaming tray	2 + 1		100	35 - 45
Boiled potatoes	-	Perforated + unperforated steaming tray	2 + 1		100	20 - 25

[1] Preheat the appliance.

Food	Ratio	Accessory/ cookware	Shelf position	Type of heat-ing	Temperature in °C	Cooking time in mins
Brown rice	1:1.5	Unperforated steaming tray	2		100	35 - 45
Long-grain rice	1:1.5	Unperforated steaming tray	2		100	20 - 30
Basmati rice	1:1.5	Unperforated steaming tray	2		100	15 - 25
Risotto	1:2	Unperforated steaming tray	2		100	30 - 40
Lentils	1:2	Unperforated steaming tray	2		100	30 - 40
Couscous	1:1	Unperforated steaming tray	2		100	6 - 10
Unripe spelt grain, coarsely ground	1:2.5	Unperforated steaming tray	2		100	15 - 20
Millet, whole	1:2.5	Unperforated steaming tray	2		100	25 - 35
Dumplings	-	Perforated + unperforated steaming tray	2 + 1		100	15 - 25
Pasta, fresh, chilled [1]	-	Unperforated steaming tray	2		100	5 - 15

17.5 Poultry and meat

Recommended settings for poultry and meat.

Recommended settings for poultry and meat

Food	Amount	Accessories/ cookware	Shelf position	Heating func-tion	Temperature in °C	Cooking time in min
Chicken breast	0,15 kg each	Unperforated steaming tray	2		100	20 - 30
Duck breast [2]	0,35 kg each	Unperforated steaming tray	2		100	12 - 18
Thin piece of sirloin, medium [2]	1 kg	Unperforated steaming tray	2		100	25 - 45
Thick piece of sirloin, medium [2]	1 kg	Unperforated steaming tray	2		100	40 - 60
Fillet of pork [2]	0.5 kg	Unperforated steaming tray	2		100	20 - 30
Pork medal-lions [2]	Approx. 3 cm thick	Unperforated steaming tray	2		100	6 - 12
Smoked pork ribs	Sliced	Unperforated steaming tray	2		100	15 - 20
Wiener saus-ages		Perforated + unperforated steaming tray	2 + 1		80 - 90	12 - 18
Bavarian veal sausages		Perforated + unperforated steaming tray	2 + 1		80 - 90	20 - 25

[1] Add a little water to the food.
[2] Sear first and wrap in foil

17.6 Fish

Recommended settings for cooking fish and mussels.

Recommended settings for fish

Food	Amount	Accessories/ cookware	Shelf position	Heating function	Temperature in °C	Cooking time in min
Sea bream, whole	0.3 kg each	Perforated + unperforated steaming tray	2 + 1		80 - 90	15 - 25
Sea bream fillet	0.15 kg each	Perforated + unperforated steaming tray	2 + 1		80 - 90	10 - 20
Trout, whole	0.2 kg each	Perforated + unperforated steaming tray	2 + 1		80 - 90	12 - 15
Cod fillet	0.15 kg each	Perforated + unperforated steaming tray	2 + 1		80 - 90	10 - 14
Salmon fillet	0.15 kg each	Perforated + unperforated steaming tray	2 + 1		100	8 - 10
Mussels	1.5 kg	Unperforated steaming tray	2		100	10 - 15
Ocean perch fillet	0.15 kg each	Perforated + unperforated steaming tray	2 + 1		80 - 90	10 - 20
Sole rolls, stuffed		Perforated + unperforated steaming tray	2 + 1		80 - 90	10 - 20

17.7 Recommended settings for soup ingredients and other food

Food	Accessories/ cookware	Shelf position	Heating function	Temperature in °C	Cooking time in min
Royale	Unperforated steaming tray	2		90	15 - 20
Semolina dumplings	Perforated + unperforated steaming tray	2 + 1		90 - 95	7 - 10
Hard-boiled eggs (size M, max. 1.8 kg)	Perforated + unperforated steaming tray	2 + 1		100	10 - 12
Soft-boiled eggs (size M, max. 1 kg)	Perforated + unperforated steaming tray	2 + 1		100	6 - 8

17.8 Desserts, compote

Recommended settings for making desserts and compote.

Making compote

1. Weigh the fruit.
2. Add approx. 1/3 of the amount of water.
3. Add sugar and spices to taste.
4. Use the recommended settings when configuring the appliance settings.

Making rice pudding

1. Weigh the rice.
2. Add 2.5 times the amount of milk.
3. Pour the rice and milk into a bowl until you have a mixture that is no more than 2.5 cm deep.
4. Use the recommended settings when configuring the appliance settings.
5. Stir the rice pudding after cooking.

✔ The rice pudding will absorb the remaining milk.

Making yoghurt

1. Heat the milk to 90 °C on the hob. Then leave to cool to 40 °C.
   If you are using long-life milk, heat the milk to 40 °C. This temperature is sufficient for long-life milk.
2. Mix 150 g of chilled yoghurt into the milk.
3. Pour the mixture into cups or small jars and cover with cling film.

4. Slide the perforated steaming tray into the cooking compartment.
5. Place the cups or jars into the perforated steaming tray.
6. Use the recommended settings when configuring the appliance settings.
7. After making the yoghurt, leave it to cool in the refrigerator.

Recommended settings for desserts and compote

Food	Accessory/cookware	Shelf position	Type of heating	Temperature in °C	Cooking time in mins
Yeast dumplings	Unperforated steaming tray	2		100	20 - 30
Crème caramel	Ramekins + perforated steaming tray	2		80	25 - 35
Rice pudding	Bowl + perforated steaming tray	2		100	30 - 40
Yoghurt	Glass jars + perforated steaming tray	2		40	300 - 360
Apple compote	Unperforated steaming tray	2		100	10 - 15
Pear compote	Unperforated steaming tray	2		100	10 - 15
Cherry compote	Unperforated steaming tray	2		100	10 - 15
Rhubarb compote	Unperforated steaming tray	2		100	10 - 15
Plum compote	Unperforated steaming tray	2		100	15 - 20

17.9 Reheating

Reheating cold food gently warms the food without impairing its quality. The food tastes and looks as though it has been freshly prepared.

Recommended settings for reheating

Using Reheat, dishes can be gently reheated. The food tastes and looks as though it has been freshly cooked.

Food	Accessories/ cookware	Shelf position	Heating function	Temperature in °C	Cooking time in min
Vegetables	Unperforated steaming tray	2		100	10 - 15
Pasta, potatoes, rice	Unperforated steaming tray	2		100	10 - 25
Plated meal, chilled, 1 portion	Uncovered cookware	2		100	10 - 20

17.10 Defrosting

The "Defrost" steam function is suitable for defrosting frozen fruit and vegetables.
It is best to defrost meat and fish in the refrigerator.
If you want to retain liquid in the frozen food, e.g. frozen creamed spinach, use the unperforated steaming tray.

Notes

- The times specified in the table are given as a guide only and depend on the quality, freezing temperature (-18 °C) and consistency of the food. The table specifies time ranges. Set the shortest cooking time to begin with, and then extend the time if necessary.
- Food that is frozen in thin pieces or individual portions defrosts more quickly than food that is frozen in a block.

Defrosting frozen food

1. Remove the frozen food from its packaging.
2. Place the frozen food into the perforated steaming tray.
3. Insert the perforated steaming tray into the cooking compartment and insert the unperforated steaming tray below it.
✔ This way, the food does not sit in the water that accumulates as it defrosts, and any liquid that drips down remains in the unperforated steaming tray.
4. Use the recommended settings when configuring the appliance settings.

Recommended settings for defrosting

Food	Amount	Accessories/ cookware	Shelf position	Heating function	Temperature in °C	Cooking time in min
Berries	0.5 kg	Perforated + unperforated steaming tray	2 + 1		50 - 55	15 - 20
Vegetables	0.5 kg	Perforated + unperforated steaming tray	2 + 1		40 - 50	15 - 50

17.11 Extracting juice

Recommended settings for juicing berries.

Juicing berries

1. Place the berries in a bowl and sprinkle with sugar.
2. Leave the mixture to stand for at least 1 hour to draw out the juice from the berries.
3. Pour the berries into the perforated steaming tray and insert at position 2.
4. Insert the unperforated steaming tray one level below to catch the juice.
5. Use the recommended settings when configuring the appliance settings.
6. Once the cooking time has elapsed, wrap the berries in a cloth and squeeze out the remaining juice.
7. Dry the cooking compartment.

Recommended settings for juicing

Food	Accessories/ cookware	Shelf position	Heating function	Temperature in °C	Cooking time in min
Raspberries	Perforated + unperforated steaming tray	2 + 1		100	30 - 45
Currants	Perforated + unperforated steaming tray	2 + 1		100	40 - 50

17.12 Preserving

You can preserve fruit and vegetables by heating them and sealing them in air-tight jars.

- Preserve food when it is fresh. When foods are stored for a relatively long period, their vitamin content is reduced and they ferment and spoil more easily.
- Only use fruit and vegetables which are in perfect condition.
- You cannot preserve the following food in your appliance: The contents of tin cans, meat, fish or pie filling.
- Check preserving jars, rubber rings, clips and springs.
- Only use stainless clamps.

Preserving fruit and vegetables

Requirement: Check preserving jars, rubber rings, clips and springs.

1. Clean rubber rings and jars thoroughly with hot water. You can use the appliance to disinfect the jars.
   → *"Setting a dish", Page 13*
2. Slide the perforated steaming tray into the cooking compartment.
3. Place the prepared jars into the perforated steaming tray.
   The jars must not be in contact with each other.
4. After the specified cooking time, open the appliance door.
5. Do not remove the preserving jars from the appliance until they have completely cooled down.

Recommended settings for preserving food

Recommended settings for preserving with steam.

Food	Accessories/ cookware	Shelf position	Heating function	Temperature in °C	Cooking time in min
Vegetables	1-litre preserving jars	2		100	30 - 120
Fruit with stones	1-litre preserving jars	2		100	25 - 30
Fruit with pips	1-litre preserving jars	2		100	25 - 30

17.13 Dough proving

Recommended settings for proving dough.
You can prove yeast dough more quickly in your appliance than at room temperature.

Dough proving

1. Insert the perforated steaming tray into the cooking compartment.
   You may use whichever shelf position you like for the perforated steaming tray.
2. Place the mixing bowl with the dough into the perforated steaming tray. Do not cover the dough.
3. Use the recommended settings when configuring the appliance settings.

Recommended settings for yeast dough

Food	Quantity	Accessory/cookware	Type of heating	Temperature in °C	Cooking time in mins
Yeast dough	1 kg	Bowl + perforated steaming tray		35	20 - 40

17.14 Frozen products

Follow the manufacturer's instructions on the packaging. The cooking times indicated assume that the food will be placed in the appliance when the cooking compartment is cold.

Defrosting and warming up frozen food

Food	Accessories/ cookware	Shelf position	Heating function	Temperature in °C	Cooking time in min
Trout	Perforated + unperforated steaming tray	2 + 1		80 - 100	20 - 30
Salmon fillet	Perforated + unperforated steaming tray	2 + 1		80 - 100	15 - 25
Broccoli, blanched	Perforated + unperforated steaming tray	2 + 1		100	6 - 10
Cauliflower, blanched	Perforated + unperforated steaming tray	2 + 1		100	5 - 8
Beans, blanched	Perforated + unperforated steaming tray	2 + 1		100	6 - 10
Peas, blanched	Perforated + unperforated steaming tray	2 + 1		100	5 - 12
Carrots, blanched	Perforated + unperforated steaming tray	2 + 1		100	4 - 6
Mixed vegetables, blanched	Perforated + unperforated steaming tray	2 + 1		100	6 - 10
Brussels sprouts, blanched	Perforated + unperforated steaming tray	2 + 1		100	5 - 10

17.15 Test dishes

The information in this section is provided for test institutes to facilitate testing of the appliance in accordance with EN 60350-1.

Recommended settings for test dishes

Food	Accessories	Height	Type of heating	Temperature in °C	Cooking time in mins
Broccoli, fresh, 300 g	Perforated + unperforated	2 + 1		100	7 - 9 [1]
Broccoli, fresh, one container	Perforated + unperforated	2 + 1		100	7 -9 [1]
Peas, frozen, two containers [2]	Perforated + unperforated	2 + 1		100	- [3]

18 Disposal

18.1 Disposing of old appliance

Valuable raw materials can be reused by recycling.

1. Unplug the appliance from the mains.
2. Cut through the power cord.
3. Dispose of the appliance in an environmentally friendly manner.
   Information about current disposal methods are available from your specialist dealer or local authority.

This appliance is labelled in accordance with European Directive 2012/19/EU concerning used electrical and electronic appliances (waste electrical and electronic equipment - WEEE).
The guideline determines the framework for the return and recycling of used appliances as applicable throughout the EU.

19 Customer Service

Function-relevant genuine spare parts according to the corresponding Ecodesign Directive can be obtained from Customer Service for a period of at least 10 years from the date on which your appliance was placed on the market within the European Economic Area.
Furthermore, our Customer Service will continue to provide you with other function-relevant and storable genuine spare parts for up to 15 years from the date on which your appliance was placed on the market.
For more information, please contact our Customer Service team.
Detailed information about the warranty period and the warranty conditions in your country is available via the QR code on the enclosed document on service contacts and warranty conditions, from our customer service or on our website.
You can find the contact details for our customer service via the QR code on the enclosed document on service contacts and warranty conditions or on our website.
This product contains light sources from energy efficiency class G. These light sources are available as a spare part and should only be replaced by trained specialist staff.
You can find the information required as per Regulation (EU) 2023/826 online at *www.bosch-home.com* on the product and service pages for your appliance, in the area of user manuals and additional documents.

19.1 Product number (E-Nr.), production number (FD) and consecutive numbering (Z-Nr.)

If you contact Customer Service, you will require the product number (E-Nr.), the production number (FD) and the consecutive numbering (Z-Nr.), which you can find on the appliance's rating plate.
You will see the rating plate with these numbers if you open the appliance door.

Make a note of your appliance's details and the Customer Service telephone number to find them again quickly.
You can also display the appliance information in the basic settings.
→ *"Basic settings", Page 15*

[1] A comparable degree of cooking between the reference sample and the main sample is achieved if the reference sample is cooked for 5 minutes (produced as described in IEC 60350-1).
[2] Spread out 2.0 kg peas evenly in the container.
[3] The test is over when 85 °C is reached at the coldest spot (see IEC 60350-1).

20 Information regarding Free and Open Source Software

This product includes software components that are licensed by the copyright holders as free software or open source software.
The applicable licence information is stored on your home appliance. You can also access the applicable licence information via your Home Connect app: "Profile -> Legal information -> Licence Information".[1] You can also download the licence information on the brand product website. (Please search on the product website for your appliance model and additional documents). Alternatively, you can request the relevant information from ossrequest@bshg.com or BSH Hausgeräte GmbH, Carl-Wery-Str. 34, 81739 Munich, Germany.
The relevant source code will be made available on request.
Please send your request to ossrequest@bshg.com or BSH Hausgeräte GmbH, Carl-Wery-Str.34, 81739 Munich, Germany.
Subject: „OSSREQUEST“
The cost of performing your request will be charged to you. This offer is valid for three years from the date of purchase or at least as long as we offer support and spare parts for the relevant appliance.

21 Declaration of Conformity

BSH Hausgeräte GmbH hereby declares that the appliance with Home Connect functionality conforms to the essential requirements and other relevant provisions of Directive 2014/53/EU.
A detailed RED Declaration of Conformity can be found online at *www.bosch-home.com* among the additional documents on the product page for your appliance.

Hereby, BSH Hausgeräte GmbH declares that the appliance with Home Connect functionality is in compliance with relevant statutory requirements.[2]
A detailed Declaration of Conformity can be found online at *www.bosch-home.co.uk* among the additional documents on the product page for your appliance.[2]
2.4 GHz band (2400–2483.5 MHz): Max. 100 mW
5-GHz band (5150–5350 MHz + 5470–5725 MHz): max. 150 mW

	BE	BG	CZ	DK	DE	EE	IE	EL	ES
	FR	HR	IT	CY	LI	LV	LT	LU	HU
	MT	NL	AT	PL	PT	RO	SI	SK	FI
	SE	NO	CH	TR	IS	UK (NI)			
5 GHz WLAN (Wi-Fi): For indoor use only.									

AL	BA	MD	ME	MK	RS	UK	UA
5 GHz WLAN (Wi-Fi): For indoor use only.							

21.1 Statement of Compliance for Great Britain

The full Statement of Compliance according to the Product Security and Telecommunications Infrastructure (Security Requirements for Relevant Connectable Products) Regulations 2023 can be found online at www.bosch-home.co.uk among the additional documents on the product page for your appliance.

Product type
This statement of compliance covers the products described in this information for use whose model identifier group is seen on the title page. The full model identifier is made up of the characters before the slash in the product number (E no.) which can be found on the rating plate. Alternatively, you can also find the model identifier in the first line of the UK Energy Label.

Name and address of manufacturer
BSH Hausgeräte GmbH, Carl-Wery-Strasse 34, 81739 München, Germany
This statement of compliance is prepared by the manufacturer.

The manufacturer, BSH Hausgeräte GmbH deems that it has complied with
- provision 5.1-1 of ETSI EN 303 645 v2.1.1 and, where relevant, provision 5.1-2 of ETSI EN 303 645 v2.1.1;
- provision 5.2-1 of ETSI EN 303 645 v2.1.1;
- provision 5.3-13 of ETSI EN 303 645 v2.1.1.

[1] Depending on the appliance specifications
[2] Only applies to Great Britain

Support period

BSH Hausgeräte GmbH will provide security updates that are necessary to maintain the main functions free of charge until at least 28/02/2034.

22 Installation instructions

Observe this information when installing the appliance.

mm

22.1 General installation instructions

Follow these instructions before you start installing the appliance.

- The safe operation of this appliance can only be guaranteed if it has been installed to a professional standard in accordance with these installation instructions. The installer shall be liable for damages incurred as a result of incorrect installation.
- Check the appliance for damage after unpacking it. Do not connect the appliance if it has been damaged in transit.
- Before starting up the appliance, remove any packaging material and adhesive film from the cooking compartment and the door.
- Proceed in accordance with the installation sheets for installing accessories.
- Fitted units must be heat-resistant up to 95 °C, and adjacent unit fronts up to 70 °C.
- Do not install the appliance behind a decorative door or the door of a kitchen unit. There is a risk of overheating.
- Cut-out work on the units should be carried out before installing the appliance. Remove any shavings. Otherwise, the correct operation of electrical components may be adversely affected.
- The appliance may be installed at a height of less than 850 mm above the floor.
- Position the appliance on a horizontal surface.
- The mains socket for the appliance must either be located in the hatched area a or outside of the area where the appliance is installed.

Any unsecured units must be secured to the wall using a standard bracket b.

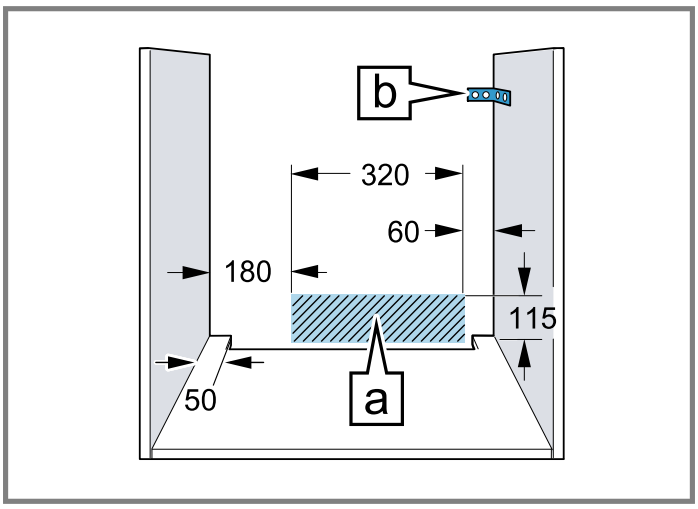

- Wear protective gloves so that you do not cut yourself. Parts that are accessible during installation may have sharp edges.
- Dimensions of the figures in mm.

⚠ WARNING – Risk of electric shock!

Once the appliance has been installed, the openings in the back panel of the appliance must not be accessible to children, not even through the drawers and kitchen cabinets underneath. This must be ensured through the installation. In the case of an island unit, a closed back panel is required.

⚠ WARNING – Risk of fire!

It is dangerous to use an extended power cord and non-approved adapters.

- ▸ Do not use extension cables or multiple socket strips.
- ▸ Only use adapters and power cords approved by the manufacturer.
- ▸ If the power cord is too short and a longer one is not available, please contact an electrician to have the domestic installation adapted.

ATTENTION

Carrying the appliance by the door handle could break it. The door handle cannot support the weight of the appliance.

- ▸ Do not carry or hold the appliance by the door handle.

Note: To ensure adequate ventilation for microwave ovens or two appliances stacked on top of each other, ventilation openings of at least 200 cm² are required. The table below shows examples of minimum dimensions for ventilation openings. The minimum height h of the ventilation opening must be at least 1 cm.
→ *"Installation in a tall unit", Page 36*

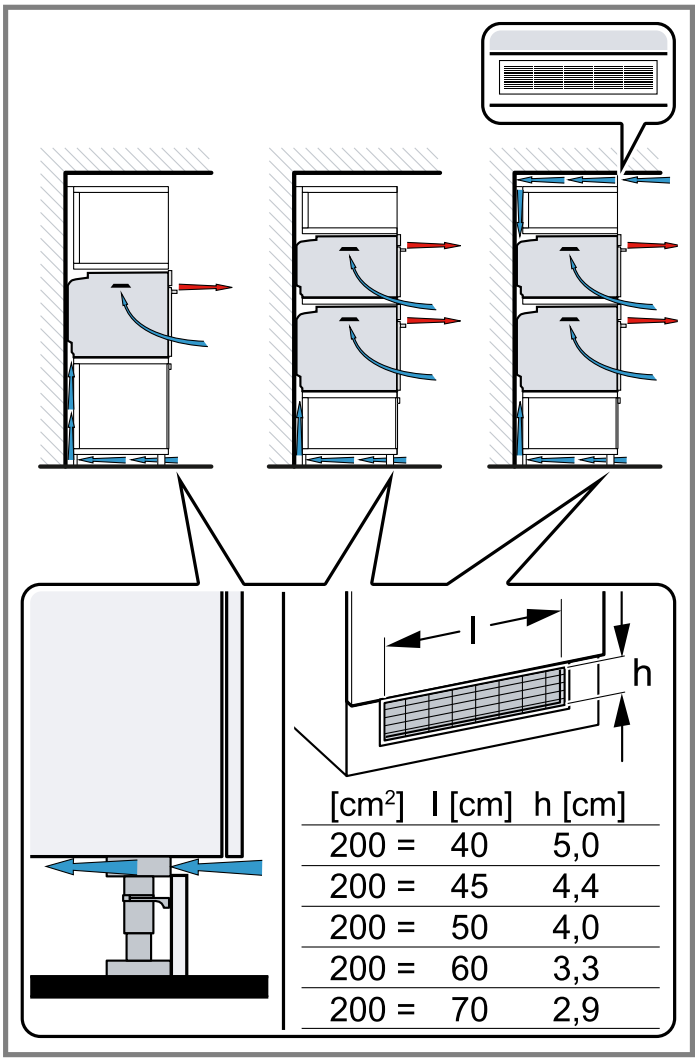

cm²	l in cm	h in cm
200	40	5
200	45	4.4
200	50	4.0
200	60	3.3
200	70	2.9

22.2 Appliance dimensions

You will find the dimensions of the appliance here

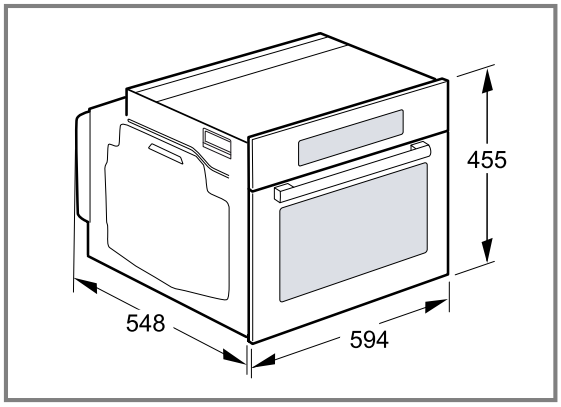

22.3 Installation below a worktop

Observe the installation dimensions and the installation instructions when installing below a worktop.

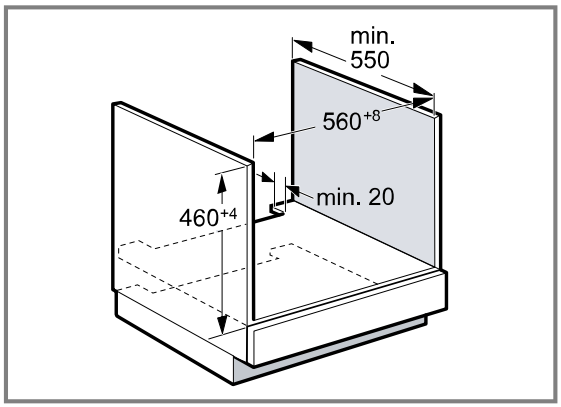

- To ventilate the appliance, the intermediate floor must have a ventilation cut-out.
- The worktop must be secured to the fitted unit.
- Observe any available installation instructions for the hob.
- Observe different national installation instructions for the hob.
- Observe the worktop depth of min. 600 mm.
- When installing under a gas hob, ensure that the appliance does not come into contact with the gas connection of the gas hob.
- If necessary, call a qualified specialist for gas installation.

22.4 Installation underneath a hob

If the appliance is installed under a hob, the following minimum dimensions must be adhered to (including substructure, if applicable).

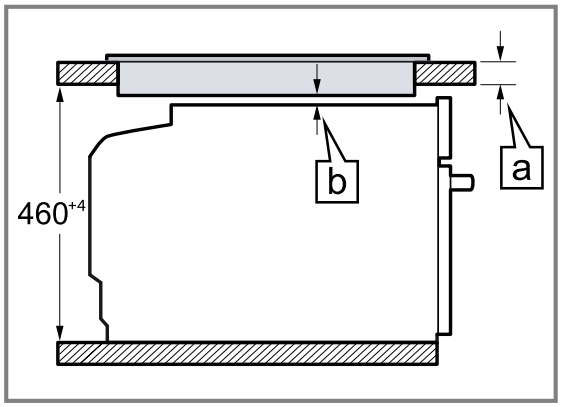

The minimum worktop thickness ⓑ a is based on the required minimum clearance ⓐ.

Hob type	a raised in mm	a flush in mm	b in mm
Induction hob	42	43	5
Full-surface induction hob	52	53	5
Gas hob	32	43	5
Electric hob	32	35	2

22.5 Installation in a tall unit

Observe the installation dimensions and the installation instructions when installing in a tall unit.

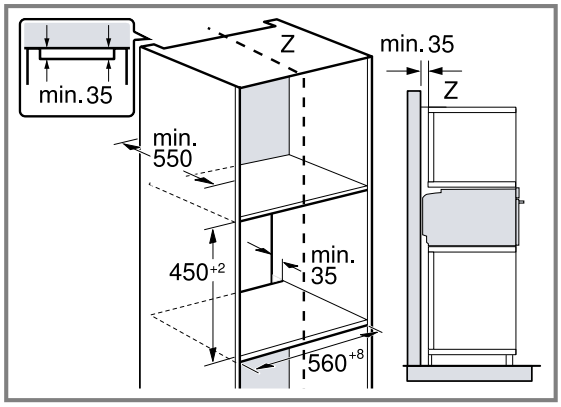

- To ventilate the appliance, the intermediate floors must have a ventilation cut-out.
- Only fit the appliance up to a height which allows accessories to be easily removed.

22.6 Corner installation

Observe the installation dimensions and the installation instructions when installing in a corner.

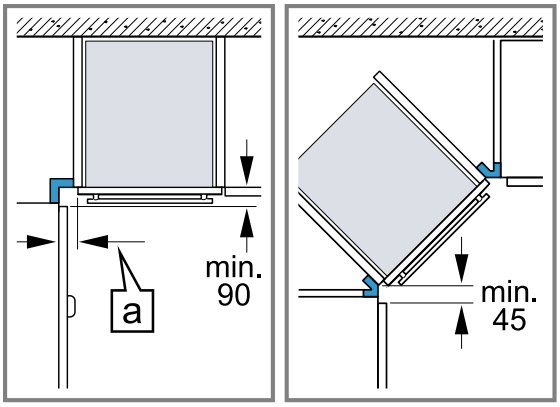

- To ensure that the appliance door can be opened, you must take the minimum dimensions into consideration when installing in a corner. The dimension ⓐ is dependent on the thickness of the unit front and the handle.

22.7 Electrical connection

In order to safely connect the appliance to the electrical system, follow these instructions.

- The appliance corresponds to protection class I and must only be operated with a protective earth connection.
- The fuse protection must correspond to the power rating specified on the appliance's rating plate and to the local regulations.
- The appliance must be disconnected from the power supply whenever installation work is being carried out.

- The appliance must only be connected using the power cable provided.
- The power cable must be plugged in at the rear of the appliance until you hear a clicking sound. A 3 m power cable can be obtained from customer service.

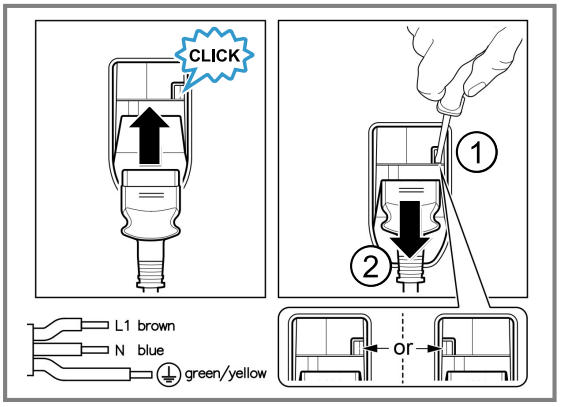

- The power cable must only be replaced with a cable from the original manufacturer. This is available from after-sales service.
- Contact protection must be guaranteed by the installation.
- If the display on the appliance remains dark, it has not been connected correctly. Disconnect the appliance from the mains and check the connection.

Electrically connect the appliance with the protective contact plug

Note: The appliance must only be connected to a protective contact socket that has been correctly installed.

- Insert the plug into the protective contact socket. When the appliance is installed, the mains plug of the power cord must be freely accessible. If free access is not possible, an isolating switch must be integrated into the permanent electrical installation according to the installation regulations.

Electrically connecting an appliance without a protective contact plug

Note: Only licensed specialists may connect the appliance. Damage caused by incorrect connection is not covered under the warranty.
An isolating switch must be integrated into the permanent electrical installation according to the installation regulations.

1. Identify the phase and neutral conductors in the socket.
   The appliance may be damaged if it is not connected correctly.
2. Connect the hob in accordance with the connection diagram.
   See the rating plate for the voltage.
3. Connect the wires of the mains power cable according to the colour coding:
   - Green/yellow = Protective conductor ⏚
   - Blue = Neutral conductor
   - Brown = Phase (external conductor)

22.8 Installing the appliance

1. Slide the appliance in fully and centre it.

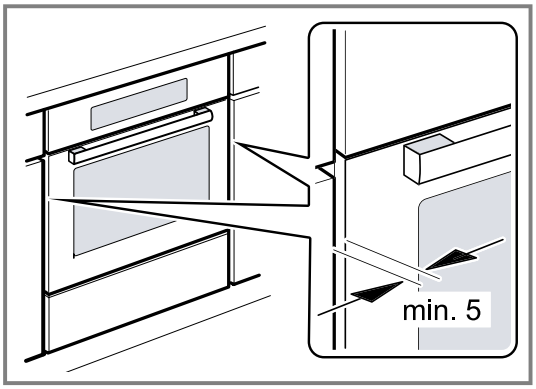

2. Screw the appliance into place.

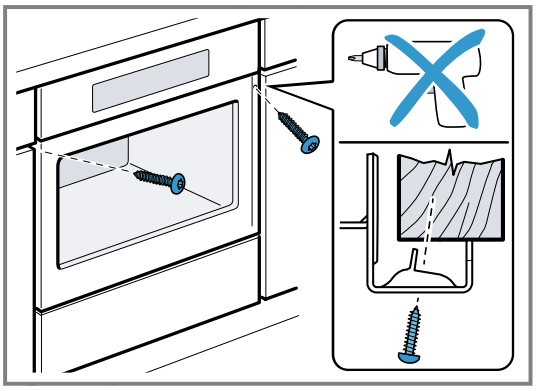

Note: The gap between the worktop and the appliance must not be closed by additional battens.
Thermal insulation strips must not be fitted to the side panels of the surround unit.

22.9 For handleless kitchens with vertical bar handle strips:

1. Attach a suitable filling piece on both sides in order to cover any sharp edges and to guarantee safe installation.

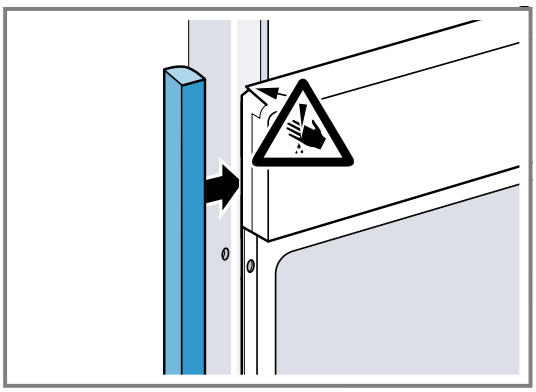

2. Secure the filling piece to the unit.

3. Pre-drill the filling piece and the unit to establish a screw connection.

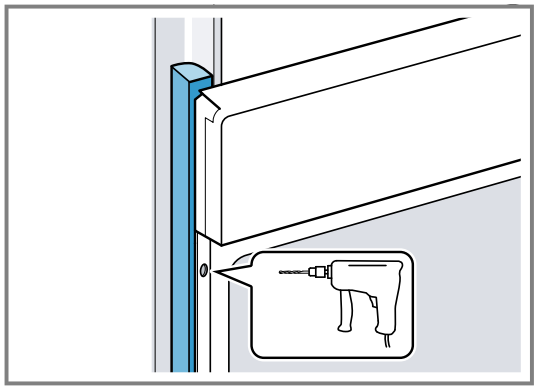

4. Secure the appliance using a suitable screw.

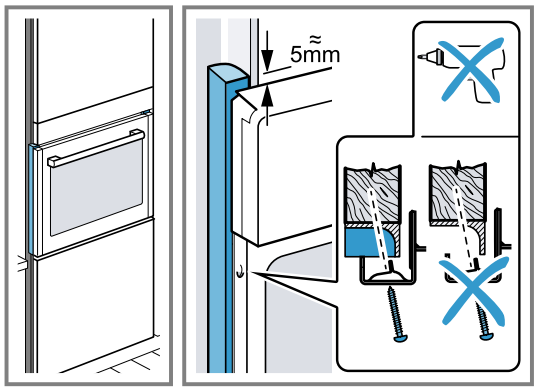

22.10 Removing the appliance

1. Disconnect the appliance from the power supply.
2. Undo the fastening screws.
3. Lift the appliance slightly and pull it out completely.

Bosch Home Connect App

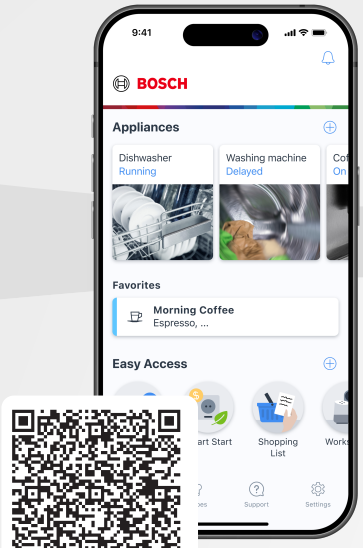

Connect your home appliance today and enjoy the following benefits:

- **Enjoy smart control and have easy access to device information - from anywhere, even per voice.**
- **Optimize product performance with regular software updates, cooking assistance and feature explanation.**
- **Improve product care thanks to useful maintenance and cleaning reminders and a device status dashboard.**

Need some help? You can find it here.

Expert advice on your Bosch home appliances, help with problems or repairs by professionals from Bosch.

Discover all the different ways Bosch can assist you:
www.bosch-home.com/service

The contact details of all countries are listed in the attached service directory.

BSH Hausgeräte GmbH
Carl-Wery-Straße 34
81739 München, GERMANY
www.bosch-home.com

A Bosch Company

Valid within Great Britain:
Imported to Great Britain by
BSH Home Appliances Ltd.
Grand Union House
Old Wolverton Road
Wolverton, Milton Keynes
MK12 5PT
United Kingdom

9001791785 (060121) REG25
en