BOSCH

Register your new device on MyBosch now and get free benefits:
bosch-home.com/welcome

MyBosch

Oven

HBF113BS0.

[en] User manual and installation instructions

Table of contents

INFORMATION FOR USE

1 Safety ... 2
2 Preventing material damage ... 4
3 Environmental protection and saving energy ... 4
4 Familiarising yourself with your appliance ... 6
5 Before using for the first time ... 9
6 Basic operation ... 9
7 Rapid heating ... 9
8 Time-setting options ... 10
9 Childproof lock ... 11
10 Cleaning and servicing ... 11
11 Rails ... 13
12 Appliance door ... 14
13 Troubleshooting ... 16
14 Transportation and disposal ... 18
15 Customer Service ... 18
16 How it works ... 18

17 INSTALLATION INSTRUCTIONS ... 31

⚠ 1 Safety

Observe the following safety instructions.

1.1 General information

- Read this instruction manual carefully.
- Keep the instruction manual and the product information safe for future reference or for the next owner.
- Do not connect the appliance if it has been damaged in transit.

1.2 Intended use

This appliance is designed only to be built into kitchen units. Read the special installation instructions.
Only a licensed professional may connect appliances without plugs. Damage caused by incorrect connection is not covered under the warranty.
Only use this appliance:
- To prepare meals and drinks.
- In private households and in enclosed spaces in a domestic environment.
- Up to an altitude of max. 4000 m above sea level.

Do not use the appliance:
- with an external timer or a remote control.

1.3 Restriction on user group

This appliance may be used by children aged 8 or over and by people who have reduced physical, sensory or mental abilities or inadequate experience and/or knowledge, provided that they are supervised or have been instructed on how to use the appliance safely and have understood the resulting dangers.
Do not let children play with the appliance.
Children must not perform cleaning or user maintenance unless they are at least 15 years old and are being supervised.
Keep children under the age of 8 years away from the appliance and power cable.

1.4 Safe use

Always place accessories in the cooking compartment the right way round.

⚠ WARNING – Risk of fire!

Combustible objects that are left in the cooking compartment may catch fire.
- ▸ Never store combustible objects in the cooking compartment.
- ▸ If smoke is emitted, the appliance must be switched off or the plug must be pulled out and the door must be held closed in order to stifle any flames.

Loose food remnants, fat and meat juices may catch fire.
- ▸ Before using the appliance, remove the worst of the food residues and remnants from the cooking compartment, heating elements and accessories.

Opening the appliance door creates a draught. Greaseproof paper may come into contact with the heating element and catch fire.
- ▸ Never place greaseproof paper loosely over accessories when preheating the appliance and while cooking.
- ▸ Always cut greaseproof paper to size and use a plate or baking tin to hold it down.

⚠ WARNING – Risk of burns!

The appliance and its parts that can be touched become hot during use.

- Caution should be exercised here in order to avoid touching heating elements.
- Young children under 8 years of age must be kept away from the appliance.

Accessories and cookware get very hot.

- Always use oven gloves to remove accessories or cookware from the cooking compartment.

When the cooking compartment is hot, any alcoholic vapours inside may catch fire.

- Only use small quantities of drinks with a high alcohol content in food.
- Open the appliance door carefully.

⚠ WARNING – Risk of scalding!

The accessible parts of the appliance become hot during operation.

- Never touch these hot parts.
- Keep children at a safe distance.

Hot steam may escape when you open the appliance door. Steam may not be visible, depending on the temperature.

- Open the appliance door carefully.
- Keep children at a safe distance.

If there is water in the cooking compartment when it is hot, this may create hot steam.

- Never pour water into the cooking compartment when the cooking compartment is hot.

⚠ WARNING – Risk of injury!

Scratched glass in the appliance door may develop into a crack.

- Do not use any harsh or abrasive cleaners or sharp metal scrapers to clean the glass on the oven door, as they may scratch the surface.

The hinges on the appliance door move when the door is opened and closed, which could trap your fingers.

- Keep your hands away from the hinges.

⚠ WARNING – Risk of electric shock!

Incorrect repairs are dangerous.

- Repairs to the appliance should only be carried out by trained specialist staff.
- Only use genuine spare parts when repairing the appliance.
- If the power cord of this appliance is damaged, it must be replaced by the manufacturer, the manufacturer's Customer Service or a similarly qualified person in order to prevent any risk.

If the insulation of the power cord is damaged, this is dangerous.

- Never let the power cord come into contact with hot appliance parts or heat sources.
- Never let the power cord come into contact with sharp points or edges.
- Never kink, crush or modify the power cord.

An ingress of moisture can cause an electric shock.

- Do not use steam- or high-pressure cleaners to clean the appliance.

If the appliance or the power cord is damaged, this is dangerous.

- Never operate a damaged appliance.
- Never operate an appliance with a cracked or fractured surface.
- Never pull on the power cord to unplug the appliance. Always unplug the appliance at the mains.
- If the appliance or the power cord is damaged, immediately unplug the power cord or switch off the fuse in the fuse box.
- Call customer services. → *Page 18*

⚠ WARNING – Risk of suffocation!

Children may put packaging material over their heads or wrap themselves up in it and suffocate.

- Keep packaging material away from children.
- Do not let children play with packaging material.

Children may breathe in or swallow small parts, causing them to suffocate.

- Keep small parts away from children.
- Do not let children play with small parts.

1.5 Halogen bulb

⚠ **WARNING – Risk of burns!**

The bulbs in the cooking compartment get very hot. There is still a risk of burning for some time after they have been switched off.

- Do not touch the glass cover.
- Avoid contact with your skin when cleaning.

⚠ **WARNING – Risk of electric shock!**

When changing the bulb, the bulb socket contacts are live.

- Before replacing the bulb, ensure that the appliance is switched off in order to prevent a potential electric shock.
- Also unplug the appliance from the mains or switch off the circuit breaker in the fuse box.

2 Preventing material damage

2.1 General

ATTENTION!

Objects on the cooking compartment floor at over 50 °C will cause heat to build up. The baking and roasting times will no longer be correct and the enamel will be damaged.

- Do not place any accessories, greaseproof paper or foil of any kind on the cooking compartment floor.
- Only place cookware on the cooking compartment floor if a temperature above 50 °C has been set.

When the cooking compartment is hot, any water inside it will create steam. The change in temperature may cause damage.

- Never pour water into the cooking compartment when it is still hot.
- Never place cookware containing water on the cooking compartment floor.

The prolonged presence of moisture in the cooking compartment leads to corrosion.

- Allow the cooking compartment to dry after use.
- Do not keep moist food in the cooking compartment for a long time with the door closed.
- Do not store food in the cooking compartment.

Leaving the appliance to cool down with the door open will damage the front of neighbouring kitchen units over time.

- Always allow the cooking compartment to cool down with the door closed after cooking at high temperatures.
- Take care not to trap anything in the appliance door.
- Only leave the cooking compartment to dry with the door open if a lot of moisture was produced during operation.

Fruit juice dripping from the baking tray leaves stains that cannot be removed.

- When baking very juicy fruit flans, do not pack too much on the baking tray.
- If possible, use the deeper universal pan.

Using oven cleaner in a hot cooking compartment damages the enamel.

- Never use oven cleaner in the cooking compartment when it is still warm.
- Remove all food remnants from the cooking compartment and the appliance door before you next heat up the appliance.

If the seal is very dirty, the appliance door will no longer close properly during operation. This may damage the front of adjacent kitchen units.

- Keep the seal clean at all times.
- Never operate the appliance if the seal is damaged or missing.

Sitting or placing objects on the appliance door may damage it.

- Do not place, hang or support objects on the appliance door.
- Do not place cookware or accessories on the appliance door.

3 Environmental protection and saving energy

3.1 Disposing of packaging

The packaging materials are environmentally compatible and can be recycled.

- Sort the individual components by type and dispose of them separately.

3.2 Saving energy

If you follow these instructions, your appliance will use less power.

Only preheat the appliance if the recipe or the recommended settings tell you to do so.

- Not preheating the appliance can reduce the energy used by up to 20%.

Use dark-coloured, black-coated or enamelled baking tins.

- These types of baking tin absorb the heat particularly well.

Open the appliance door as little as possible during operation.

- This maintains the temperature in the cooking compartment and eliminates the need for the appliance to reheat.

When baking multiple dishes, do so in succession or in parallel.

- The cooking compartment is heated after baking the first dish. This reduces the baking time for the second cake.

If the cooking time is relatively long, you can switch the appliance off 10 minutes before the cooking time ends.

- There will be enough residual heat to finish cooking the dish.

Remove any accessories that are not being used from the cooking compartment.

- Accessories that are not being used do not need to be heated.

Allow frozen food to defrost before cooking.

- This saves the energy that would otherwise be required to defrost it.

Note:

The appliance requires:

- a maximum of 1 W when the appliance is in operation with the display switched on
- a maximum of 0.5 W when the appliance is in operation with the display switched off

4 Familiarising yourself with your appliance

4.1 Control panels

You can use the control panel to configure all functions of your appliance and to obtain information about the operating status.

Controls

You can use the controls to configure all functions of your appliance and to obtain information about the operating status.
On certain models, specific details such as colour and shape may differ from those pictured.

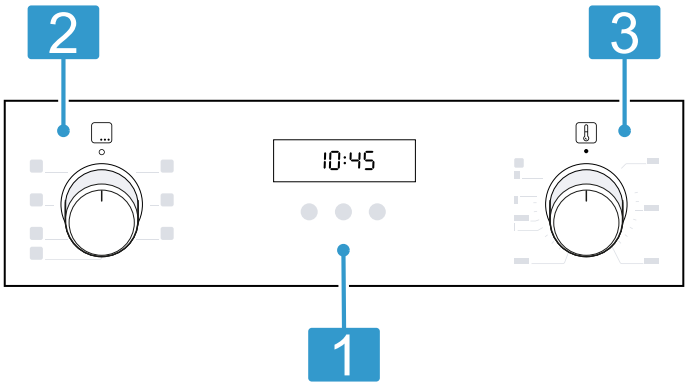

1	**Buttons and display** The buttons are touch-sensitive surfaces. To select a function, simply press lightly on the relevant field. The display shows symbols for active functions and the time-setting options. → *"Buttons and display", Page 6*
2	**Function selector** Use the function selector to set the types of heating and other functions. You can turn the function selector clockwise or anti-clockwise from the zero setting . Depending on the appliance, the function selector can be pushed in. Press on the function selector to click it into or out of the zero setting . → *"Types of heating and functions", Page 6*
3	**Temperature selector** Use the temperature selector to set the temperature for the type of heating and select settings for other functions. You can only turn the temperature selector clockwise from the zero setting until it offers resistance. You cannot turn it any further than this. Depending on the appliance, the temperature selector can be pushed in. Press on the temperature selector to click it into or out of the zero setting . → *"Temperature and setting levels", Page 7*

Buttons and display

You can use the buttons to set various functions for your appliance. The display shows the settings.

If a function is active, the corresponding symbol lights up on the display. ⏲ only lights up when you change the time.

Symbol	Function	Use
⏲	Childproof lock	Activate or deactivate the childproof lock.
⏲	Time-setting options	Select the time ⏲, timer 🔔, cooking time I→I and the end time →I. To select the individual time-setting options, press ⏲ several times.
—	Minus	Decrease the setting values.
+	Plus	Increase the setting values.

Types of heating and functions

To ensure that you always use the right type of heating to cook your food, we explain the differences and applications below.

Symbol	Type of heating	What it's used for and how it works
	3D hot air	Bake or roast on one or more levels. The fan distributes the heat from the ring-shaped heating element in the back wall evenly around the cooking compartment.

Symbol	Type of heating	What it's used for and how it works
	Hot air gentle	Cook selected dishes gently on one level without preheating. The fan distributes the heat from the ring-shaped heating element in the back wall evenly around the cooking compartment. The food is cooked in phases using residual heat. Select a temperature between 120 °C and 230 °C. Always keep the appliance door closed when cooking. This type of heating is used to determine the energy consumption in air recirculation mode and the energy efficiency class.
	Full-surface grill	Grill flat items such as steak, sausages, or toast. Gratinate food. The entire area below the grill element becomes hot.
	Hot air grilling	Roast poultry, whole fish or large pieces of meat. The grill element and the fan switch on and off alternately. The fan circulates the hot air around the food.
	Top/bottom heating	Traditionally bake or roast on one level. This type of heating is especially suitable for cakes with moist toppings. The heat is emitted evenly from above and below. This type of heating is used to determine the energy consumption in the conventional mode.
	Defrosting	Gently defrost frozen food.

Additional functions

Here, you can find an overview of other functions of your appliance.

Symbol	Function	Use
	Rapid heating	Rapidly preheat the cooking compartment without accessories. → *"Rapid heating", Page 9*

Temperature and setting levels

There are different settings for the types of heating and functions.

Note: For temperature settings above 250 °C, the appliance reduces the temperature to approx. 240 °C after approx. 10 minutes. If your appliance has the top/bottom heating or bottom heating types, this temperature reduction does not take place.

Symbol	Function	Use
●	Zero setting	The appliance does not heat up.
50–275	Temperature range	Set the temperature in the cooking compartment in °C.
1, 2, 3 or I, II, III	Grill settings	Depending on the appliance type, set the grill settings for the grill, for the large area and grill, or for the small area. 1 = low 2 = medium 3 = high

Heat-up indicator

The appliance indicates when it is heating up.
When the appliance is heating, 🌡 lights up on the display. This symbol goes out when heating is paused.
When you preheat the appliance, the optimal time to place your food in the cooking compartment is when the symbol first goes out.

Note: Due to thermal inertia, the temperature that is displayed may differ slightly from the actual temperature inside the cooking compartment.

4.2 Cooking compartment

The functions in the cooking compartment make your appliance easier to use.

Rails

The rails in the cooking compartment enable you to place accessories at different heights.
The cooking compartment has five shelf positions. The shelf positions are numbered from bottom to top.

You can remove the rails, e.g. for cleaning.
→ *"Rails", Page 13*

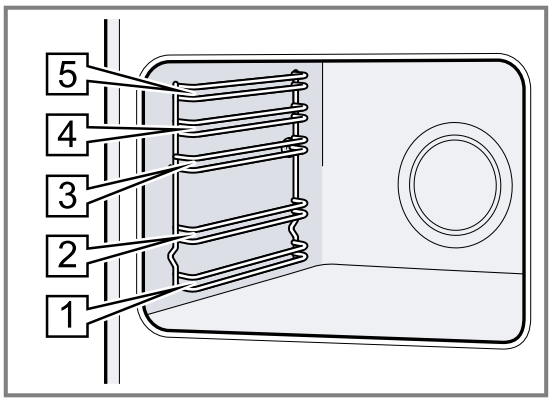

Lighting

The oven light lights up the cooking compartment. With most types of heating and functions, the lighting lights up during operation. If you use the function selector to end the operation, the lighting switches off.

Appliance door

If you open the appliance door during operation, the operation continues.

Cooling fan

The cooling fan switches on and off depending on the appliance's temperature. The hot air escapes above the door.

ATTENTION!

Do not cover the ventilation slot above the appliance door. The appliance overheats.

- Ensure that the ventilation slots are unobstructed.

To ensure that the appliance cools down more quickly after operation, the cooling fan continues to run for a certain period afterwards.

Condensation

Condensation can occur in the cooking compartment and on the appliance door when cooking. Condensation is normal and does not adversely affect appliance operation. Wipe away the condensation after cooking.

4.3 Accessories

Use original accessories. These have been made especially for your appliance.

Note: Heat may deform the accessory. This deformation has no effect on the function. When the accessory cools down, it will regain its original shape.

The accessories supplied may differ depending on the appliance model.

Accessories		Use
Wire rack	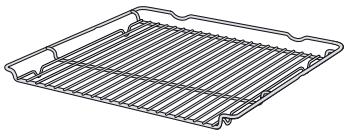	■ Baking tins ■ Ovenproof dishes ■ Cookware ■ Meat, e.g. roasting joints or steak ■ Frozen meals
Universal pan	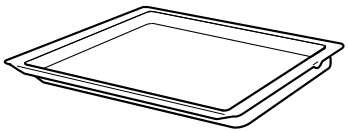	■ Moist cakes ■ Biscuits ■ Bread ■ Large roasts ■ Frozen meals ■ Catching dripping liquids, e.g. fat when grilling food on the wire rack.

Using the accessory

Always slide the accessory into the cooking compartment correctly. This is the only way that you can remove the accessory halfway without it tipping.

1. Insert the accessory between the two guide rods for a shelf position.

Wire rack	Insert the wire rack with the open side facing the appliance door and the curved lip ⌣ facing downwards.
Baking tray E.g. universal pan or baking tray	Slide the tray in with the sloping edge facing the appliance door.

2. Slide the accessory all the way in, making sure that the accessory does not touch the appliance door.

Note: Take any accessories that you will not be using out of the cooking compartment while the appliance is in operation.

Other accessories

You can purchase other accessories from our after-sales service, specialist retailers or online.
You will find a comprehensive range of products for your appliance in our brochures and online: www.bosch-home.com
Accessories vary from one appliance to another. When purchasing accessories, always quote the exact product number (E no.) of your appliance.
You can find out which accessories are available for your appliance in our online shop or from our after-sales service.

5 Before using for the first time

Configure the settings for initial start-up. Clean the appliance and accessories.

5.1 Initial configuration

You have to implement settings for the initial configuration before you can use your appliance.

5.2 Cleaning the appliance before using it for the first time

Clean the cooking compartment and accessories before using the appliance to prepare food for the first time.

1. Remove the accessory and the leftover packaging, such as polystyrene pellets, from the cooking compartment.
2. Before heating, wipe the smooth surfaces in the cooking compartment with a soft, damp cloth.
3. Ventilate the room while the appliance is heating.
4. Set the type of heating and the temperature.
   → *"Basic operation", Page 9*

Type of heating	3D hot air
Temperature	Maximum
Cooking time	1 hour

5. Switch off the appliance after the specified cooking time.
6. Wait until the cooking compartment has cooled down.
7. Clean the smooth surfaces with soapy water and a dish cloth.
8. Clean the accessory with soapy water and a dish cloth or a soft brush.

6 Basic operation

6.1 Switching on the appliance

- Turn the function selector to any position other than the "Off" position ○.
- ✔ The appliance is switched on.

6.2 Switching off the appliance

- Turn the function selector to the "Off" position ○.
- ✔ The appliance is switched off.

6.3 Types of heating and temperature

1. Use the function selector to set the type of heating.
2. Use the temperature selector to set the temperature or grill setting.
   ✔ The appliance starts heating after a few seconds.
3. When the dish is ready, switch off the appliance.

Tips

- The most suitable type of heating for your food can be found in the description of the types of heating.
- You can also set a cooking time and an end time on the appliance.
  → *"Time-setting options", Page 10*

Changing the type of heating

You can change the type of heating at any time.

- Use the function selector to set the required type of heating.

Changing the temperature

You can change the temperature at any time.

- Turn the temperature selector to set the desired temperature.

7 Rapid heating

To save time, you can use the rapid heating to shorten the preheat time.
Only use rapid heat-up when a temperature of over 100 °C has been set.
After rapid heating, it is best to use the following types of heating:

- 3D hot air
- Top/bottom heating

7.1 Setting rapid heating

To ensure an even cooking result, do not place the food in the cooking compartment until rapid heating has come to an end.

1. Use the function selector to select rapid heating.
2. Use the temperature selector to set the required temperature.
   ✔ Rapid heating starts after a few seconds.
   ✔ When the rapid heating process ends, an audible signal sounds and the heating indicator goes out.
3. Use the function selector to set a suitable type of heating.
4. Place the food in the cooking compartment.

8 Time-setting options

Your appliance has different time-setting options which ensure that operation can be controlled.

8.1 Overview of the time-setting options

You can use the button to select the different time-setting options.

Time-setting option	Use
Timer	The timer can be set independently of the operation. It does not affect the appliance.
Cooking time	If a cooking time has been set for the operation, the appliance stops heating automatically once this time has elapsed.
End	A time at which the operation ends can be set for the cooking time. The appliance starts up automatically so that it finishes cooking at the required time.
Time	Set the time.

8.2 Setting the timer

The timer runs independently of the appliance when it is in operation. The timer can be set up to 23 hours and 59 minutes regardless of whether the appliance is on or off. The timer has its own audible signal so that you can tell whether it is the timer or a cooking time which has elapsed.

Note: The timer and cooking time cannot count down at the same time. If a cooking time has already been set, you cannot set the timer.

1. Press repeatedly until is selected in the display.
2. Use the — or + button to set the timer duration.

Button	Recommended value
—	5 minutes
+	10 minutes

Up to 10 minutes, the timer duration can be set in 30-second increments. The time increments become bigger as the value increases.

✔ The timer starts and the timer duration begins to count down after a few seconds.
✔ An audible signal sounds and the timer duration is zero in the display when the timer duration has elapsed.

3. Once the timer duration has elapsed
   – Press any button to switch off the timer.

Changing the timer

The timer duration can be changed at any time.

Requirement: is highlighted in the display.

▸ Use the — or + button to change the timer duration.
✔ The appliance applies the change after a few seconds.

Cancelling the timer

The timer duration can be cancelled at any time.

Requirement: is highlighted in the display.

▸ Use the — button to reset the timer duration to zero.
✔ After a few seconds, the appliance applies the change and goes out.

8.3 Setting the cooking time

The cooking time can be set to up to 23 hours and 59 minutes for the operation.

Requirement: The type of heating and temperature or setting have been set.

1. Press repeatedly until is selected in the display.
2. Use the — or + button to set the cooking time.

Additional programme	Recommended value
—	10 minutes
+	30 minutes

The cooking time can be set in one-minute increments up to one hour, and then in five-minute increments.

✔ After a few seconds, the appliance starts heating and the cooking time counts down.
✔ When the cooking time has elapsed, a signal sounds and the duration is at zero in the display.

3. When the cooking time has elapsed:
   – Press any button to end the signal prematurely.
   – To set another cooking time, press the + button.
   – When the dish is ready, switch off the appliance.

Changing the cooking time

The cooking time can be changed at any time.

Requirement: is highlighted in the display.

▸ Change the cooking time using the — or + button.
✔ The appliance applies the change after a few seconds.

Cancelling the cooking time

The cooking time can be cancelled at any time.

Requirement: is highlighted in the display.

▸ Reset the cooking time to zero using the — button.
✔ After a few seconds, the appliance applies the change and continues to heat without a cooking time.

8.4 Setting the end time

You can delay the time at which the cooking time is due to end by up to 23 hours and 59 minutes.

Notes

- The end time cannot be set for types of heating with grill function.
- In order to achieve a good cooking result, do not delay the end time once the appliance is already operating.

- Food will spoil if you leave it in the cooking compartment for too long.

Requirements

- The type of heating and temperature or setting have been set.
- A cooking time must be set.

1. Press ⏲ repeatedly until →| is selected in the display.
2. Press the — or + button.
✔ The display shows the calculated end time.
3. Use the — or + button to delay the end time.
✔ After a few seconds, the appliance applies the setting and the display shows the set end time.
✔ Once the calculated start time has been reached, the appliance starts heating up and the cooking time starts counting down.
✔ When the cooking time has elapsed, a signal sounds and the duration is at zero in the display.
4. When the cooking time has elapsed:
   – Press any button to end the signal prematurely.
   – To set another cooking time, press the + button.
   – When the dish is ready, switch off the appliance.

Changing the end time

In order to achieve a good cooking result, you can only change the set end time before operation starts and the cooking time starts counting down.

Requirement: →| is highlighted in the display.

▸ Use the — or + button to delay the end time.
✔ The appliance applies the change after a few seconds.

Cancelling the end time

You can delete the set end time at any time.

Requirement: →| is highlighted in the display.

▸ Reset the end time to the current time plus the set cooking time using the — button.
✔ After a few seconds, the appliance applies the change and starts heating up. The cooking time counts down.

8.5 Setting the time

Once the appliance has been connected to the mains or after a power cut, the time flashes in the display. The time starts at "12:00". Set the current time.

Requirement: The function selector must be set to the off ○ position.

1. Use — or + to set the time.
2. Press ⏲.
✔ The time that is set appears in the display.

9 Childproof lock

Secure the appliance to prevent children from accidentally switching it on or changing the settings.

Note: After a power cut, the childproof lock will no longer be active.

9.1 Activating and deactivating the childproof lock

Requirement: The function selector must be set to the off ○ position.

▸ To activate the childproof lock, press and hold the ⏲ button until SAFE appears in the display.
   – To deactivate the childproof lock, press and hold the ⏲ button until SAFE goes out in the display.

10 Cleaning and servicing

To keep your appliance working efficiently for a long time, it is important to clean and maintain it carefully.

10.1 Cleaning agent

To avoid damaging the different surfaces of the appliance, do not use unsuitable cleaning agents.

⚠ **WARNING – Risk of electric shock!**

An ingress of moisture can cause an electric shock.

▸ Do not use steam- or high-pressure cleaners to clean the appliance.

ATTENTION!

Unsuitable cleaning agents damage the surfaces of the appliance.

▸ Do not use aggressive or abrasive cleaning agents.
▸ Do not use cleaning products with a high alcohol content.
▸ Do not use hard scouring pads or cleaning sponges.
▸ Do not use any special cleaners if the appliance is still warm.

Using oven cleaner in a hot cooking compartment damages the enamel.

▸ Do not use oven cleaner in the cooking compartment when it is still warm.
▸ Remove all food remnants from the cooking compartment and the appliance door before you next heat up the appliance.

New sponge cloths contain residues from production.

▸ Wash new sponge cloths thoroughly before use.

Suitable cleaning agents

Only use cleaning agents that are suitable for the different surfaces on your appliance.

Follow the instructions on cleaning the appliance.
→ *"Cleaning the appliance", Page 13*

Appliance

Surface	Suitable cleaning agents	Information
Stainless steel	■ Hot soapy water ■ Special stainless steel cleaning products suitable for hot surfaces	To prevent corrosion, remove any limescale, grease, starch or albumin (e.g. egg white) stains on stainless steel fronts immediately. Apply a thin layer of the stainless steel cleaning product with a soft cloth.
Enamel, plastic, painted, and screen-printed surfaces E.g. control panel	■ Hot soapy water	Do not use glass cleaner or a glass scraper.
Knobs	■ Hot soapy water	Clean with a dish cloth and dry with a soft cloth. Do not remove or scrub.

Appliance door

Area	Suitable cleaning agents	Information
Door panels	■ Hot soapy water	Do not use a glass scraper or stainless steel wool. **Tip:** Remove the door panels in order to clean them thoroughly. → *"Appliance door", Page 14*
Door panel	■ Made of stainless steel: Stainless steel cleaner ■ Made of plastic: Hot soapy water	Do not use glass cleaner or a glass scraper. **Tip:** Remove the upper door panel for thorough cleaning. → *"Appliance door", Page 14*
Door handle	■ Hot soapy water	In order to avoid stubborn dirt, remove descaling agents from the door handle immediately.
Door seal	■ Hot soapy water	Do not remove or scrub.

Cooking compartment

Area	Suitable cleaning agents	Information
Enamelled surfaces	■ Hot soapy water ■ Vinegar water ■ Oven cleaner	Soak any heavily soiled areas and use a brush or steel wool. Leave the appliance door open to dry the cooking compartment after cleaning it. **Notes** ■ Enamel burns at very high temperatures, causing minor discolouration. The functionality of your appliance is not affected by this. ■ The edges of thin baking trays cannot be completely enamelled and may be rough. This does not impair corrosion protection. ■ Food residues will leave a white coating on the enamel surfaces. The coating does not pose a health risk. The functionality of your appliance is not affected by this. Remove residues with lemon juice.
Glass cover on the oven light	■ Hot soapy water	Use oven cleaner to remove very heavy soiling.
Rails	■ Hot soapy water	Soak any heavily soiled areas and use a brush or steel wool. **Tip:** Remove the shelf supports for cleaning. → *"Rails", Page 13*
Accessories	■ Hot soapy water ■ Oven cleaner	Soak any heavily soiled areas and use a brush or steel wool. Enamelled accessories are dishwasher-safe.

10.2 Cleaning the appliance

In order to avoid damaging the appliance, clean your appliance only as specified, and using suitable cleaning products.

⚠ **WARNING – Risk of burns!**

The appliance and its parts that can be touched become hot during use.

- Caution should be exercised here in order to avoid touching heating elements.
- Young children under 8 years of age must be kept away from the appliance.

⚠ **WARNING – Risk of fire!**

Loose food remnants, fat and meat juices may catch fire.

- Before using the appliance, remove the worst of the food residues and remnants from the cooking compartment, heating elements and accessories.

Requirement: Read the information on cleaning agents.

→ *"Cleaning agent", Page 11*

1. Clean the appliance using hot soapy water and a dish cloth.
   - For some surfaces, you can use alternative cleaning agents.
     → *"Suitable cleaning agents", Page 12*
2. Dry with a soft cloth.

10.3 Cleaning the stainless steel surfaces

1. Observe the information regarding the cleaning agents.
2. Clean using a sponge cloth and hot soapy water in the direction of the finish.
3. Dry with a soft cloth.
4. Apply a thin layer of the stainless steel cleaning product with a soft cloth.

Tip: You can obtain stainless steel cleaning products from after-sales service or the online shop.

11 Rails

To clean the rails and cooking compartment thoroughly, you can remove the shelf supports.

11.1 Unhooking the rails

⚠ **WARNING – Risk of burns!**

The rails can be very hot.

- Never touch the rails when they are hot.
- Allow the appliance to cool down.
- Keep children at a safe distance.

1. Hold the bottom of the shelf support and pull it slightly towards the front. Pull the extension pins in the lower section of the rails out of the mounting openings.

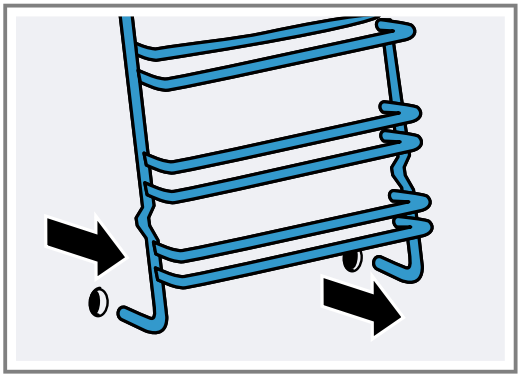

2. Pull the entire shelf support downwards first and then pull it forwards and remove it.

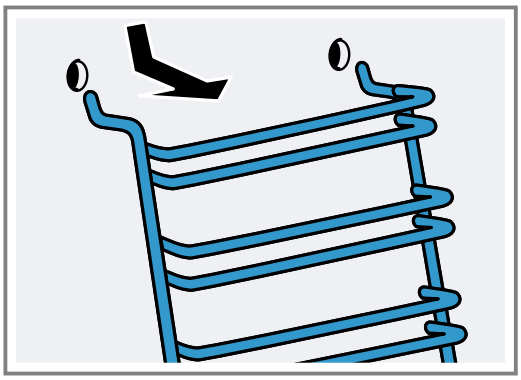

11.2 Attaching the rails

1. Place the two hooks at the top of the rail into the upper holes.

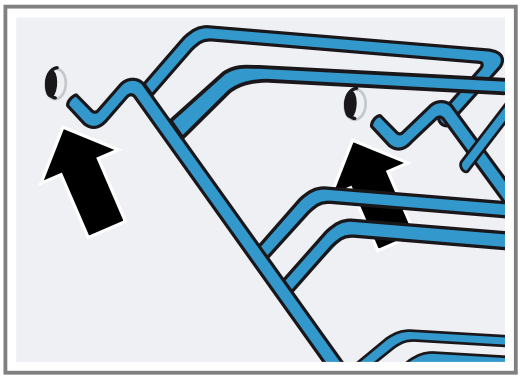

2. **ATTENTION!**
   Incorrect assembly
   - Never move the rail before the two hooks are secured fully in the upper holes. Otherwise the enamelled coating may be damaged and break.

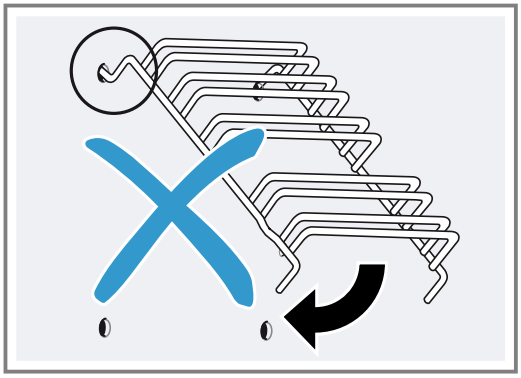

3. Both hooks must be inserted fully into the upper holes. Move the rail down slowly and carefully, and hook it into the lower holes.

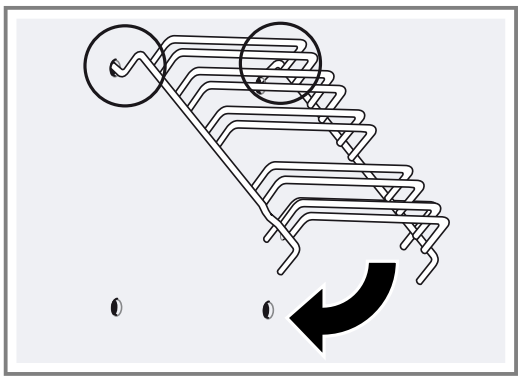

4. Hook both rails into the side walls of the oven.

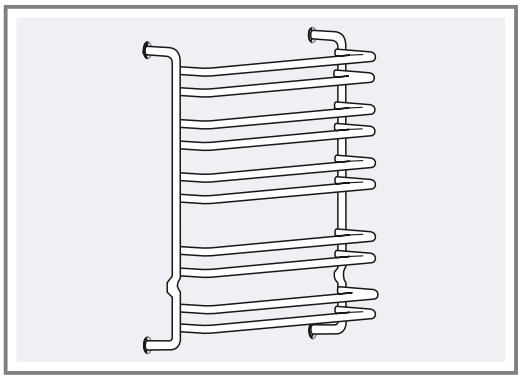

If the rails are fitted correctly, the distance between the two upper shelf positions is greater.

12 Appliance door

It is normally sufficient if you clean the outside of the appliance door. If the appliance door is very dirty on the inside and outside, you can remove the appliance door and clean it.

12.1 Door hinges

⚠ **WARNING – Risk of injury!**
When the hinges are not secured, they can snap shut with great force.
- If you open the appliance door, ensure that the locking levers are fully open or fully closed.

1. The oven door hinges each have a locking lever. When the locking levers are closed, the oven door is secured in place.

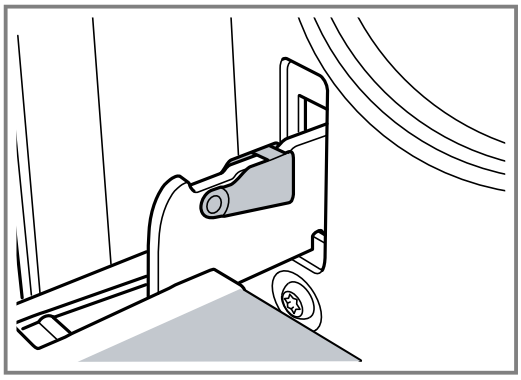

It cannot be detached.

2. When the locking levers are open in order to detach the oven door, the hinges are secured.

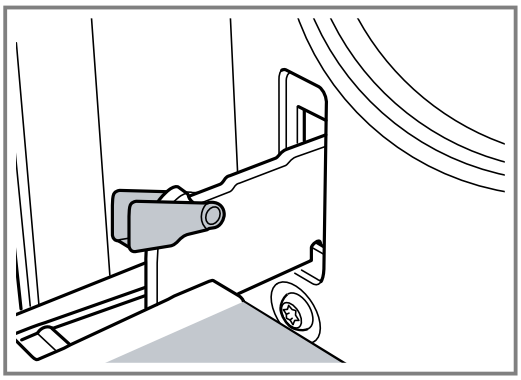

The hinges cannot snap shut.

12.2 Removing the appliance door

1. Open the oven door fully.
2. Open the locking levers on the left- and right-hand hinges.

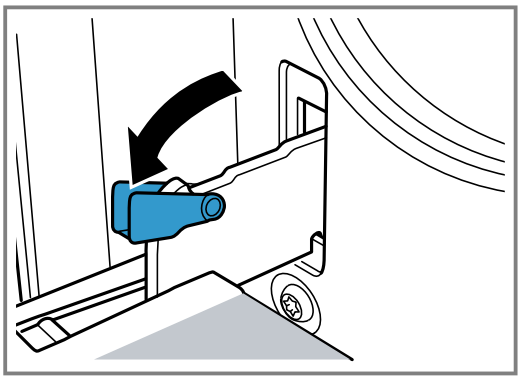

3. Close the oven door as far as the limit stop. Grip the left and right hand sides of the door with both hands. Close the door slightly more and remove it.

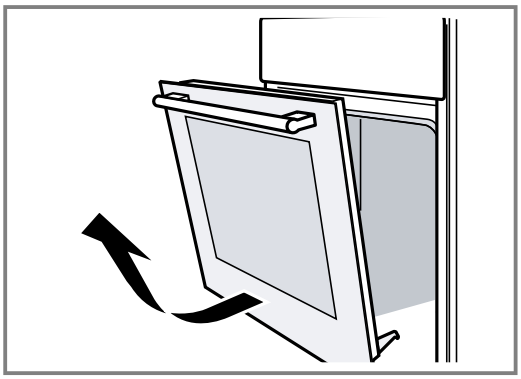

12.3 Removing the door panes

The glass panes of the oven door can be removed to make cleaning easier.

⚠ **WARNING – Risk of injury!**

Scratched glass in the appliance door may develop into a crack.

- Do not use any harsh or abrasive cleaners or sharp metal scrapers to clean the glass on the oven door, as they may scratch the surface.

The components in the appliance door may have sharp edges.

- Wear gloves.

1. Detach the oven door.
   → *"Removing the appliance door", Page 15*
2. Position it on a cloth with its handle pointing downwards.
3. To remove the upper cover of the oven door, press in the tabs on the left and right using your fingers. Pull out and remove the cover.

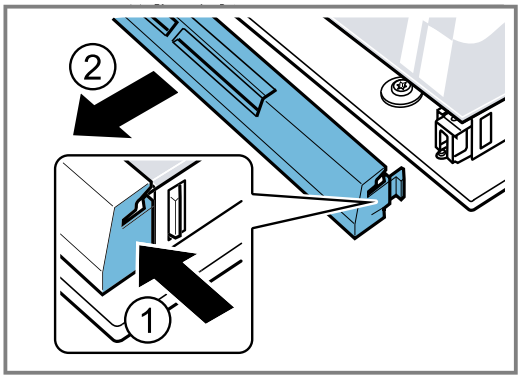

4. Lift the top pane up and out.

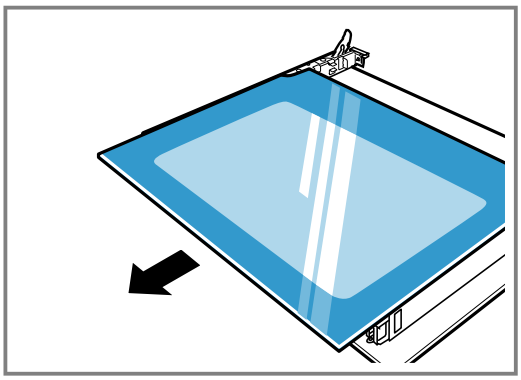

12.4 Fitting the door panes

1. Hold the top pane firmly on both sides and insert it at an angle towards the back.

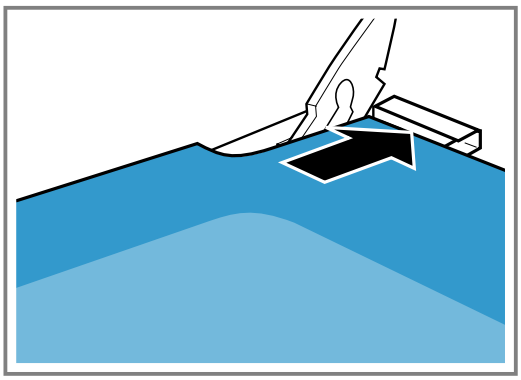

   Push the pane into both openings on the underside. The smooth surface must face outwards and the rough surface must face inwards.
2. Place the cover at the top of the oven door and press it on.
   The mounting brackets must lock in place on both sides.
3. Attach the oven door.
   → *"Attaching the appliance door", Page 16*

Note: Only use the oven once the glass panes have been correctly fitted.

12.5 Attaching the appliance door

Reattach the oven door in the reverse sequence to removal.

⚠ **WARNING – Risk of injury!**
The oven door might accidentally fall or a hinge may suddenly snap shut.
- In this case, do not hold onto the hinge. Call customer service.

1. When attaching the oven door, ensure that both hinges are inserted in the opening direction.

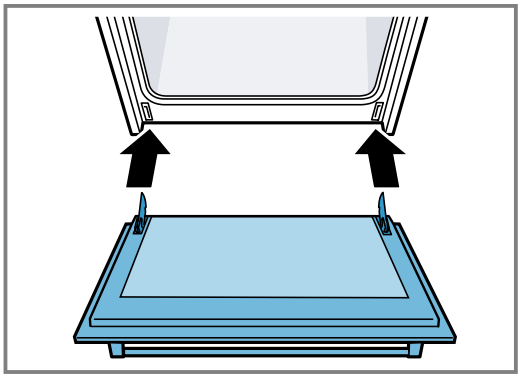

2. The notch on the hinge must engage on both sides.

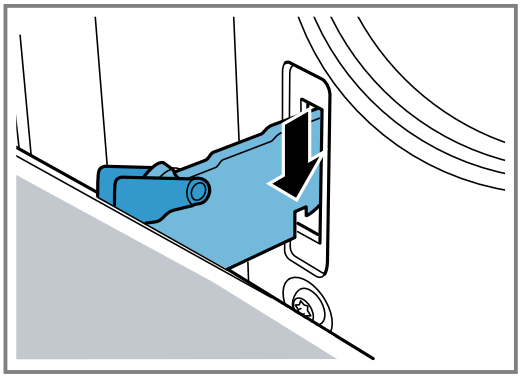

3. Close both locking levers again.

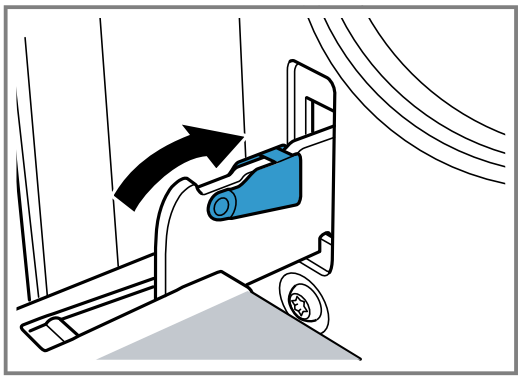

4. Close the appliance door.

12.6 Additional door safety

Additional safety devices have been fitted to prevent contact with the oven doors. Always attach these safety devices when children could come near the oven. You can purchase this special accessory from after-sales service. 11023590

⚠ **WARNING – Risk of burns!**
During long cooking times, the oven door may become very hot.
- Supervise small children when the oven is in operation.

13 Troubleshooting

You can rectify minor faults on your appliance yourself. Read the troubleshooting information before contacting after-sales service. This will avoid unnecessary costs.

⚠ **WARNING – Risk of injury!**
Improper repairs are dangerous.
- Repairs to the appliance should only be carried out by trained specialist staff.
- If the appliance is defective, call Customer Service.

⚠ **WARNING – Risk of electric shock!**
Incorrect repairs are dangerous.
- Repairs to the appliance should only be carried out by trained specialist staff.
- Only use genuine spare parts when repairing the appliance.
- If the power cord of this appliance is damaged, it must be replaced by the manufacturer, the manufacturer's Customer Service or a similarly qualified person in order to prevent any risk.

13.1 Malfunctions

Fault	Cause and troubleshooting
The appliance is not working.	The mains plug of the power cord is not plugged in. ▸ Connect the appliance to the power supply.
	The circuit breaker in the fuse box has tripped. ▸ Check the circuit breaker in the fuse box.

Fault	Cause and troubleshooting
The appliance is not working.	There has been a power cut. ▸ Check whether the lighting in your kitchen or other appliances are working.
The appliance does not switch off fully at the end of a cooking time.	At the end of a cooking time, the appliance stops heating up. The oven light and cooling fan do not switch off. For types of heating with air recirculation, the fan continues to run in the back wall of the cooking compartment. ▸ Turn the function selector to the off position. ✔ The appliance is switched off. ✔ The oven light and the fan in the back wall are switched off. ✔ The cooling fan switches off automatically as soon as the appliance has cooled down.
The time flashes in the display.	There has been a power cut. ▸ Reset the time. → *"Setting the time", Page 11*
SAFE lights up in the display and no settings can be made on the appliance.	Childproof lock is activated. ▸ Use ⏲ to deactivate childproof lock. → *"Childproof lock", Page 11*
A message with E appears in the display, e.g. E05-32.	Electronics fault **1.** Press ⏲. – If necessary, reset the time on the clock. ✔ If the fault was a one-off, the error message disappears. **2.** If the error message appears again, call the after-sales service. State the exact error message and the E no. for your appliance in full. → *"Customer Service", Page 18*

Replacing the oven light bulb

If the light in the cooking compartment fails, change the oven light bulb.

Note: Heat-resistant, 25-watt, 230 V halogen bulbs are available from the after-sales service or specialist retailers. Only use these bulbs. Hold the new halogen bulbs only with a clean, dry towel. This increases the service life of the bulb.

⚠ WARNING – Risk of burns!

The appliance and its parts that can be touched become hot during use.

- ▸ Caution should be exercised here in order to avoid touching heating elements.
- ▸ Young children under 8 years of age must be kept away from the appliance.

⚠ WARNING – Risk of electric shock!

When changing the bulb, the bulb socket contacts are live.

- ▸ Before replacing the bulb, ensure that the appliance is switched off in order to prevent a potential electric shock.
- ▸ Also unplug the appliance from the mains or switch off the circuit breaker in the fuse box.

Requirements

- The appliance is disconnected from the power supply.
- The cooking compartment has cooled down.
- You have a new halogen bulb to replace the old one.

1. Place a tea towel in the cooking compartment to prevent damage.
2. Turn the glass cover anti-clockwise to remove it.
3. Pull out the halogen bulb without turning it.

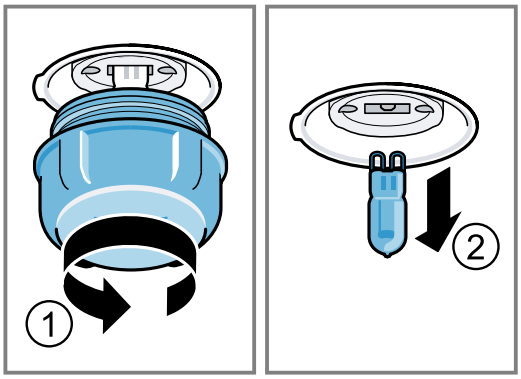

4. Insert the new halogen bulb and press it firmly into the socket.
   Make sure the pins are positioned correctly.
5. Depending on the appliance model, the glass cover may have a sealing ring. Attach the sealing ring.
6. Screw in the glass cover.
7. Remove the tea towel from the cooking compartment.
8. Connect the appliance to the power supply.

14 Transportation and disposal

You can find out here how to prepare your appliance for transportation. You will also find out how to dispose of old appliances.

14.1 Disposing of old appliance

Valuable raw materials can be reused by recycling.

1. Unplug the appliance from the mains.
2. Cut through the power cord.
3. Dispose of the appliance in an environmentally friendly manner.
   Information about current disposal methods are available from your specialist dealer or local authority.

This appliance is labelled in accordance with European Directive 2012/19/EU concerning used electrical and electronic appliances (waste electrical and electronic equipment - WEEE).
The guideline determines the framework for the return and recycling of used appliances as applicable throughout the EU.

14.2 Transporting the appliance

Keep the original appliance packaging. Only transport the appliance in the original packaging. Observe the transport arrows on the packaging.

1. Secure all moving parts in and on the appliance using adhesive tape that can be removed without leaving any traces.
2. Slide all accessories, such as baking trays, into the corresponding slots with thin cardboard at the edges, in order to avoid damaging the appliance.
3. Place cardboard or similar between the front and rear side to prevent knocks against the inside of the door glass.
4. Secure the door and, if available, the top cover to the appliance sides using adhesive tape.

If the original packaging is no longer available

1. In order to guarantee sufficient protection against any transport damage, pack the appliance in protective packaging.
2. Always transport the appliance upright.
3. Do not hold the appliance by the door handle or the connections on the rear, as these could be damaged.
4. Do not place any heavy objects on the appliance.

15 Customer Service

Detailed information on the warranty period and terms of warranty in your country is available from our after-sales service, your retailer or on our website.
If you contact Customer Service, you will require the product number (E-Nr.) and the production number (FD) of your appliance.
The contact details for Customer Service can be found in the enclosed Customer Service directory or on our website.
This product contains light sources from energy efficiency class G.

15.1 Product number (E-Nr.) and production number (FD)

You can find the product number (E-Nr.) and the production number (FD) on the appliance's rating plate. You will see the rating plate with these numbers if you open the appliance door.

Make a note of your appliance's details and the Customer Service telephone number to find them again quickly.

16 How it works

Here, you can find the ideal settings for various types of food as well as the best accessories and cookware. These recommendations are perfectly tailored to your appliance.

16.1 Proceed as follows:

Note:
If you are using the appliance for the first time, follow this important information:

- → *"Safety", Page 2*
- → *"Saving energy", Page 4*
- → *"Preventing material damage", Page 4*

1. Select a suitable type of food from the overview of food.
   Note: If you do not find the exact food or application that you want to prepare or implement, look for a similar dish and take the general information into consideration.
2. Remove any accessories from the cooking compartment.
3. Select suitable cookware and accessories.
   Use the cookware and the accessory listed in the recommended settings.
4. Only preheat the appliance if the recipe or the recommended settings tell you to do so.

5. Use the recommended settings when configuring the appliance settings.
6. ⚠ **WARNING – Risk of scalding!**
   Hot steam may escape when you open the appliance door. Steam may not be visible, depending on the temperature.
   - Open the appliance door carefully.
   - Keep children at a safe distance.

   When the dish is ready, switch off the appliance.

16.2 Condensation

This section tells you how condensation is formed, how you can prevent damage, and how you can prevent condensation from forming.
When you are cooking food in the cooking compartment, a lot of steam may form in the cooking compartment. Since your appliance is extremely energy-efficient, only a small amount of heat escapes during operation. Due to the significant differences in temperature between the appliance interior and the external parts of the appliance, condensation may build up on the appliance door, the control panel or the front panels of adjacent kitchen cabinets. The formation of condensation is a normal physical phenomenon.
In order to prevent damage, wipe away the condensation.
When you preheat the appliance, you reduce the build-up of condensation.

16.3 Good to know

Observe this information when preparing food.

- The temperature and cooking time depend on the amount of food and the recipe. Settings ranges are specified for this reason. Select lower values first and, if required, select higher values the next time. Cooking times cannot be reduced by using higher temperatures. Doing this would mean that the food would only be cooked on the outside, and would not be fully cooked in the middle.
- The setting values apply to food placed in the cooking compartment while the cooking compartment is still cold. You can cut your energy use by up to 20%.
  It is not usually necessary to preheat the appliance. If you would like to preheat the oven anyway, you can reduce the indicated baking times by a few minutes.
  Preheating is required for some types of food. Do not place accessories into the cooking compartment until it has finished preheating.
- Remove any accessories that are not being used from the cooking compartment. This allows you to achieve optimal cooking results and save up to 20% in energy.
- Hot air gentle is an intelligent type of heating that allows you to gently cook meat, fish and baked items. The appliance optimally controls the supply of energy to the cooking compartment. The food is cooked in phases using residual heat. This means that the food remains more succulent and browns less. Depending on the preparation and food, you can save energy. If you preheat the appliance or open the appliance door before the food has finished cooking, you may not be able to achieve this result.
  The hot air gentle type of heating is used to measure both the energy consumption in circulating-air mode and the energy efficiency class.
- Only use original accessories.
  The original accessory has been tailored to the cooking compartment and the types of heating. Ensure that the accessory slides in the right way round.

Greaseproof paper

Only use greaseproof paper that is suitable for the selected temperature. Always cut the greaseproof paper to size.

⚠ **WARNING – Risk of fire!**
Opening the appliance door creates a draught. Greaseproof paper may come into contact with the heating element and catch fire.

- Never place greaseproof paper loosely over accessories when preheating the appliance and while cooking.
- Always cut greaseproof paper to size and use a plate or baking tin to hold it down.

16.4 Notes on baking

When baking, use the shelf positions indicated.

Baking on one level	Shelf position
Rising pasta/baked goods or tin on the wire rack	2
Flat pasta/baked items or in the baking tray	2–3

Baking on two or more levels	Shelf position
Universal pan Baking tray	3 1
Baking tins on the wire rack: First wire rack Second wire rack	Shelf position 3 1

Baking on three levels	Shelf position
Baking trays Universal pan Baking trays	5 3 1

Notes

- When baking on several layers, use hot air. Different food that is placed in the oven at the same time will not necessarily be ready at the same time.
  In such cases, you can remove the cooked food and continue to cook the other baking tray. If necessary, you can change the position and direction of the baking trays.

- Position baking tins/dishes either next to one another or offset on different shelves so that they are not directly one above the other in the cooking compartment. You can cut energy use by cooking different items at the same time.
- For best results, we recommend using dark-coloured metal baking tins.

16.5 Cakes and other baked goods

Recommended settings for cakes and baked items
The temperature and baking time depend on the quantity and consistency of the dough. This is why temperature ranges are given in the tables. Set a short cooking time first. If required, set a longer cooking time next time. A lower temperature results in more even browning.

Baking tips

We have compiled a few tips to help you achieve a good baking result.

Topic	Tip
You want your cake to rise evenly.	▪ Only grease the base of the springform cake tin. ▪ After baking, use a knife to carefully loosen the cake from the baking tin.
You do not want small baked goods to stick to each other when baking.	Leave a minimum clearance of 2 cm around each item that is to be baked. This allows enough space for the baked goods to expand and brown on all sides.
Determine whether the cake is ready.	Push a cocktail stick into the highest point on the cake. If the cocktail stick comes out clean, the cake is ready.
You want to bake according to your own recipe.	Use similar items in the baking tables as a guide.
Use bakeware made of silicone, glass, plastic or ceramic.	▪ The baking tin must be heat-resistant up to 250 °C. ▪ Cakes in these types of bakeware brown less.

Recommended settings

Cakes in tins

Meal	Accessory/cookware	Shelf position	Type of heating	Temperature in °C	Cooking time, minutes
Sponge cake, simple	Vienna ring tin/loaf tin	2		160–180	50–60
Sponge cake, simple, 2 levels	Vienna ring tin/loaf tin	3+1		140–160	60–80
Sponge cake, delicate	Vienna ring tin/loaf tin	2		150–170	60–80
Sponge flan base	Flan base tin	3		160–180	30–40
Fruit tart or cheesecake with shortcrust pastry base	Springform cake tin, diameter 26 cm	2		160–180	70–90
Strudel	Tart dish or tin	1		200–240	25–50
Pie	Springform cake tin Ø 28 cm	2		160–180	25–35
Sponge cake	Bundt cake tin	2		150–170	60–80
Sponge flan, 3 eggs	Springform cake tin, diameter 26 cm	2		160–170	30–40
Sponge flan, 6 eggs	Springform cake tin Ø 28 cm	2		160–170	35–45

Tray bakes

Meal	Accessory/cookware	Shelf position	Type of heating	Temperature in °C	Cooking time, minutes
Sponge cake with topping	Universal pan	3		160–180	20–45

[1] Preheat the appliance.

Meal	Accessory/cookware	Shelf position	Type of heating	Temperature in °C	Cooking time, minutes
Sponge cake, 2 levels	Universal pan + Baking tray	3+1		140–160	30–55
Shortcrust tart with dry topping	Universal pan	2		170–190	25–35
Shortcrust tart with dry topping, 2 levels	Universal pan + Baking tray	3+1		160–170	35–45
Shortcrust tart with moist topping	Universal pan	2		160–180	60–90
Yeast cake with dry topping	Universal pan	3		170–180	25–35
Yeast cake with dry topping, 2 levels	Universal pan + Baking tray	3+1		150–170	20–30
Yeast cake with moist topping	Universal pan	3		160–180	30–50
Yeast cake with moist topping, 2 levels	Universal pan + Baking tray	3+1		150–170	40–65
Plaited loaf, plaited ring	Universal pan	2		160–170	35–40
Swiss roll	Universal pan	2		170–190[1]	15–20
Strudel, sweet	Universal pan	2		190–210	55–65
Strudel, frozen	Universal pan	3		200–220	35–40

[1] Preheat the appliance.

Small yeast cakes

Meal	Accessory/cookware	Shelf position	Type of heating	Temperature in °C	Cooking time, minutes
Muffins	Muffin tray on wire rack	2		170–190	20–40
Muffins, 2 levels	Muffin tray on wire rack	3+1		160–170	30–40
Small baked items	Universal pan	3		150–170	25–35
Viennese whirls, 2 levels	Universal pan + Baking tray	3+1		150–170	25–40
Puff pastry	Universal pan	3		180–200	20–30
Puff pastry, 2 levels	Universal pan + Baking tray	3+1		180–200	25–35
Puff pastry, 3 levels	2x Baking tray + Universal pan	5+3+1		170–190	30–45
Choux pastry, e.g. profiteroles, eclairs	Universal pan	3		190–210	35–50
Choux pastry, 2 levels, e.g. profiteroles, eclairs	Universal pan + Baking tray	3+1		170-190	35-45

Biscuits

Meal	Accessory/cookware	Shelf position	Type of heating	Temperature in °C	Cooking time, minutes
Viennese whirls	Universal pan	3		140-150[1]	30-40
Viennese whirls, 2 levels	Universal pan + Baking tray	3+1		140–150[1]	30–45
Viennese whirls, 3 levels	2x Baking tray + Universal pan	5+3+1		130–140[1]	40–55
Biscuits	Universal pan	3		140–160	20–30
Biscuits, 2 levels	Universal pan + Baking tray	3+1		130–150	25–35
Biscuits, 3 levels	2x Baking tray + Universal pan	5+3+1		130–150	30–40
Meringues	Universal pan	3		80-100	100-150
Meringues, 2 levels	Universal pan + Baking tray	3+1		90-100	100-150
Coconut macaroons	Universal pan	2		100-120	30-40
Coconut macaroons, 2 levels	Universal pan + Baking tray	3+1		100-120	35-45
Coconut macaroons, 3 levels	x 2 Baking tray + Universal pan	5+3+1		100-120	40-50
Viennese whirls	Universal pan	3		180–200	25–35

[1] Preheat the appliance for 5 minutes. For appliances with the rapid heating function, do not use this function for preheating.

Tips for next time you bake

If something goes wrong when baking, you can find some tips here.

Topic	Tip
Your cake collapses.	▪ Note the ingredients and preparation instructions that are given in the recipe. ▪ Use less liquid. Or: ▪ Reduce the baking temperature by 10 °C and increase the baking time.
Your cake is too dry.	Increase the baking temperature by 10 °C and shorten the baking time.
Your cake is generally too light in colour.	▪ Check the shelf position and accessory. ▪ Increase the baking temperature by 10 °C. Or: ▪ Increase the baking time.
Your cake is too light on top and too dark underneath.	Place the cake one level higher in the cooking compartment.
Your cake is too dark on top and too light underneath.	▪ Place the cake one level lower in the cooking compartment. ▪ Reduce the baking temperature and increase the baking time.

Topic	Tip
Your cake is unevenly browned.	▪ Reduce the baking temperature. ▪ Cut the greaseproof paper to a suitable size. ▪ Position the baking tin in the centre. ▪ Shape small baked goods to be the same size and thickness.
Your cake is cooked on the outside but is not fully baked through on the inside.	▪ Reduce the baking temperature and increase the baking time. ▪ Add less liquid. For cakes with a moist topping: ▪ Pre-bake the base. ▪ Sprinkle the baked base with almonds or breadcrumbs. ▪ Place the topping on the base.
The cake will not come out of the tin when turned upside down.	▪ Allow the cake to cool for 5–10 minutes after baking. ▪ Use a knife to carefully loosen the edge of the cake. ▪ Turn the cake tin upside down again and cover it several times with a cold, wet cloth. ▪ Next time you bake, grease the baking tin/ dish and sprinkle it with breadcrumbs.

16.6 Bread and bread rolls

The values for bread dough apply to both dough placed on a tray and dough placed in a loaf tin.

ATTENTION!

When the cooking compartment is hot, any water inside it will create steam. The change in temperature may cause damage.

- Never pour water into the cooking compartment when it is still hot.
- Never place cookware containing water on the cooking compartment floor.

Recommended settings

Bread and bread rolls

Meal	Accessory/cookware	Shelf position	Type of heating	Temperature in °C	Cooking time, minutes
Bread, 750 g, in a loaf tin or free-form	Universal pan or Loaf tin	2		180–200	50–60
Bread, 1000 g, in a loaf tin or free-form	Universal pan or Loaf tin	2		200–220	35–50
Bread, 1500 g, in a loaf tin or free-form	Universal pan or Loaf tin	2		180–200	60–70
Flatbread	Universal pan	3		220-230	20-25
Flatbread, frozen[1]	Universal pan	2		200–220[2]	10–25
Bread rolls, sweet, fresh	Universal pan	3		170–180[2]	20–30

[1] The cooking process must take place on the appliance baking tray.
[2] Preheat the appliance.

Meal	Accessory/cookware	Shelf position	Type of heating	Temperature in °C	Cooking time, minutes
Bread rolls, sweet, fresh, 2 levels	Universal pan + Baking tray	3+1		160–180[2]	15–25
Bread rolls, fresh	Universal pan	3		200–220	20–30
Toast with topping, x 4	Wire rack	3		200–220	15–20
Toast with topping, x 12	Wire rack	3		220–240	15–25

[1] The cooking process must take place on the appliance baking tray.
[2] Preheat the appliance.

16.7 Pizza, quiche and savoury cakes

Here, you can find information about pizza, quiche and savoury cakes.

Recommended settings

Pizza, quiche and savoury cakes

Meal	Accessory/cookware	Shelf position	Type of heating	Temperature in °C	Cooking time, minutes
Pizza, fresh, 2 levels	Universal pan + Baking tray	3+1		160–180	35–45
Pizza, fresh, thin-crust	Universal pan	2		250-270[1]	15-25
Pizza, chilled	Universal pan	2		190–210[1]	10–15
Pizza, frozen, thin-crust, x 1	Wire rack	2		190–210	15–25
Pizza, frozen, thin base, x 2	Universal pan + Wire rack	3+1		190–210	20–25
Pizza, frozen, deep-pan, x 1	Wire rack	2		200–210	20–30
Pizza, frozen, deep-pan, x 2	Universal pan + Wire rack	3+1		170–190	20–30
Savoury bakes in a tin	Springform cake tin Ø 28 cm	3		170–190	50–60
Quiche, flan	Tart dish or tin	1		210–230	40–50
Pierogi	Ovenproof dish	2		170–190	55–65
Empanadas	Universal pan	3		180–190	35–45
Börek	Universal pan	1		210-220	30-40

[1] Preheat the appliance.

16.8 Bakes and gratins

How well cooked the bake is will depend on the size of the ovenware and the thickness of the bake.
Use wide, shallow cookware for bakes and gratins.
Food takes longer to cook in deep, narrow cookware and it browns more on top.
You can prepare food in baking tins or in the universal pan.

- Baking tins on the wire rack: Shelf position 2
- Universal pan: Shelf position 2

You can cut energy use by cooking different items at the same time. Position baking tins next to one another in the cooking compartment.

⚠ **WARNING – Risk of injury!**
If hot glass cookware is placed on a wet or cold surface, the glass may shatter.
- Place hot glass ovenware on a dry mat after cooking.

Recommended settings

Bakes and gratins

Meal	Accessory/cookware	Shelf position	Type of heating	Temperature in °C	Cooking time, minutes
Bake, savoury, fresh, cooked ingredients	Ovenproof dish	2		200–220	30–60
Bake, sweet	Ovenproof dish	2		180–200	50–60
Potato gratin, raw ingredients, 4 cm deep	Ovenproof dish	2		150–170	60–80
Potato gratin, raw ingredients, 4 cm deep, on 2 levels	Ovenproof dish	3+1		150–160	70–80

16.9 Poultry, meat and fish

The table lists values for poultry, meat and fish, with default values for the weight.
If you prepare dishes that are larger or heavier than what is specified in the recommended settings, always use the lower temperature. If cooking more than one item, use the weight of the heaviest item as a basis for determining the cooking time. The individual pieces must be approximately the same size.

Roasting and grilling on the wire rack

Roasting on the wire rack works particularly well for large poultry or for multiple pieces at the same time.

- Depending on the size and type of the food to be roasted, add up to 1/2 litre water to the universal pan.
  You can make a sauce from the juices that are collected. This also means that less smoke is produced and the cooking compartment does not become as dirty.
- Keep the appliance door closed when using the grill.
  Never grill with the appliance door open.
- Place the food to be grilled on the wire rack. In addition, slide the universal pan in at least one shelf position lower, with the slanted edge facing the appliance door. This means that any dripping fat is caught.

Roasting in cookware

If you cook food in cookware, you can remove it from the cooking compartment more easily and serve it directly in the cookware. If you cover the cookware when you cook your food, this will keep the cooking compartment cleaner.

General information about roasting in cookware

- Use heat-resistant, ovenproof cookware.
- Place the cookware onto the wire rack.
- Check in advance whether the cookware fits in the cooking compartment.
- Glass cookware is best.
- Shiny roasting dishes made from stainless steel or aluminium are not ideal. They reflect the heat like a mirror. The food cooks more slowly and does not brown as well. Increase the temperature accordingly and extend the cooking time.
- Follow the manufacturer's instructions for your roasting dishes.

Cookware without lid

- Use a deep roasting dish.
- Place the cookware onto the wire rack.
- If you do not have any suitable cookware, use the universal pan.

Cookware with lid

- Use a suitable lid that seals well.
- Place the cookware onto the wire rack.
- Meat, poultry and fish can also become crispy in a covered roasting dish. Use a roasting dish with a glass lid for this. Select a higher temperature.

⚠ WARNING – Risk of injury!

If hot glass cookware is placed on a wet or cold surface, the glass may shatter.

- ▸ Place hot glass ovenware on a dry mat after cooking.

⚠ WARNING – Risk of scalding!

Very hot steam may escape when the lid is opened after cooking. Steam may not be visible, depending on the temperature.

- ▸ Lift the lid in such a way that the hot steam can escape away from you.
- ▸ Keep children away from the appliance.

Notes on roasting and grilling

The setting values are based on the assumption that unstuffed, chilled, ready-to-roast poultry, meat or fish is placed into a cold cooking compartment.

ATTENTION!

Acidic food may damage the grid

- ▸ Do not place acidic food, such as fruit or food with an acidic marinade directly on the pan support.

- The larger the poultry, meat or fish, the lower the temperature and the longer the cooking time.
- Turn the poultry, meat or fish after approx. 1/2 to 2/3 of the time listed.
- Add a little liquid to the poultry in the cookware. Cover the base of the cookware with approx. 1–2 cm of liquid.
- When you turn poultry, ensure that the breast side or skin side is underneath to begin with.
- Use tongs to turn the pieces of food you are grilling. If you pierce the meat with a fork, the juices will run out and it will become dry.
- Only add salt to steaks once they have been grilled. Salt draws water from the meat.

Information for those allergic to nickel
In rare cases, small amounts of nickel may pass into the food.

Tips for poultry, meat and fish

Observe the instructions when preparing poultry, meat and fish

Poultry
- For duck or goose, pierce the skin on the underside of the wings. This allows the fat to drain out.
- If using duck breast, score the skin. Do not turn duck breasts.
- Poultry will turn out particularly crispy and brown if you baste it towards the end of the roasting time with butter, salted water or orange juice.

Meat
- Coat lean meat with fat as required, or separate the pieces.
- When roasting, add a little liquid if the meat is lean. Cover the base of the glass cookware with approx. 1/2 cm of liquid.
- Score the rind crosswise. If you turn the joint when cooking it, ensure that the rind is underneath to begin with.
- When the joint is ready, turn off the oven and allow it to rest for a further 10 minutes in the cooking compartment, keeping the door closed. This helps distribute the meat juices more evenly. Wrap the joint in aluminium foil if necessary. The resting time is not included in the specified cooking time.
- It is more convenient to roast and braise meat in the cookware. You can take the joint out of the cooking compartment more easily in the cookware, and prepare the sauce in the cookware itself.
- The quantity of liquid depends on the type of meat, the material the cookware is made from and on whether or not a lid is used. If you are cooking meat in an enamelled or dark-coloured metal roasting dish, it will need a little more liquid than if cooked in glass cookware.
- The liquid in the cookware evaporates as the meat roasts. Carefully pour in more hot liquid if required.
- The distance between the meat and the lid must be at least 3 cm. The meat may expand.
- To braise the meat, sear it first as required. Add water, wine, vinegar or similar for the braising liquid. The base of the cookware must be covered with 1–2 cm of liquid.

Fish
- You do not need to turn whole fish.
- Place the whole fish into the cooking compartment in swimming position with the dorsal fin facing upwards.
- Placing half a potato or a small ovenproof container in the stomach cavity of the fish provides stability.
- You can tell when the fish is cooked because the dorsal fin can be removed easily.
- When stewing, add two to three tablespoons of liquid and a little lemon juice or vinegar into the cookware.

Tips for roasting and braising

Use these tips for good results when roasting and braising.

Topic	Tip
Lean meat must not dry out.	▪ Coat lean meat with fat or oil as required or cover it with strips of bacon.
If you want to cook a joint with rind, proceed as follows:	▪ Score the rind in a criss-cross pattern. ▪ Roast the joint with the rind facing down first.
Keep the cooking compartment as clean as possible.	▪ Cook the food in a covered roasting dish at a higher temperature. Or: ▪ Use the grill tray. If required, the grill tray can be bought later as an optional accessory.
You want the meat (e.g. roast beef) to remain hot and succulent.	▪ When the roast is ready, switch off the oven and leave the meat to rest for 10 minutes in the cooking compartment with the door closed. This helps distribute the meat juices more evenly. The resting time is not included in the specified cooking time. ▪ After preparing it, wrap the food in aluminium foil.

Recommended settings

Poultry

Food	Accessories/cookware	Shelf position	Type of heating	Temperature in °C/grill setting	Cooking time in mins
Chicken, 1.3 kg, unstuffed	Cookware without lid	2		200–220	60–70
Small chicken portions, 250 g each	Cookware without lid	3		220–230	30–35
Chicken goujons, nuggets, frozen	Universal pan	3		190–210	20–25
Duck, unstuffed, 2 kg	Cookware without lid	2		190–210	100–110

Food	Accessories/cookware	Shelf position	Type of heating	Temperature in °C/grill setting	Cooking time in mins
Duck breast, 300 g each, medium	Cookware without lid	3		240–260	30–40
Goose, unstuffed, 3 kg	Cookware without lid	2		170–190	120–140
Goose legs, 350 g each	Cookware without lid	3		220–240	40–50
Small turkey, 2.5 kg	Cookware without lid	2		180–200	80–100
Turkey breast, boned, 1 kg	Cookware with lid	2		240–260	80–100
Turkey thigh, on the bone, 1 kg	Cookware without lid	2		180–200	90–100

Meat

Food	Accessories/cookware	Shelf position	Type of heating	Temperature in °C/grill setting	Cooking time in mins
Joint of pork without rind, e.g. neck, 1.5 kg	Cookware without lid	1		180–200	140–160
Joint of pork with rind, e.g. shoulder, 2 kg	Cookware without lid	1		170–190	190–200
Pork tenderloin steak, 1.5 kg	Cookware with lid	2		190–210	130–140
Pork steaks, 2 cm thick	Wire rack	4		3	20–25[1]
Fillet of beef, medium, 1 kg	Cookware without lid	3		210–220	45–55
Pot-roasted beef, 1.5 kg	Cookware with lid	2		200–220	100–120[2]
Sirloin, medium, 1.5 kg	Cookware without lid	2		200–220	60–70
Hamburger, 3–4 cm thick	Wire rack	4		3[3]	25–30[1]
Joint of veal, 1.5 kg	Cookware without lid	2		180–200	120–140
Knuckle of veal, 1.5 kg	Cookware with lid	2		210–230	130–150
Leg of lamb, boned, medium, 1.5 kg	Cookware without lid	2		170–190	70–80[4]
Saddle of lamb on the bone, medium, 1.5 kg	Cookware without lid	2		180–190	45–55[4]
Grilled sausages	Wire rack	3		3	20–25[1]
Meat loaf, 1 kg	Cookware without lid	2		170–180	70–80

[1] Slide the universal pan underneath the wire rack.
[2] At the start, add liquid to the cookware so that at least 2/3 of the joint is covered in liquid
[3] Turn the dish 2/3 of the way through the cooking time.
[4] Do not turn the food. Cover the base with water.

Fish

Food	Accessories/cookware	Shelf position	Type of heating	Temperature in °C/grill setting	Cooking time in mins
Fish, grilled, whole, 300 g, e.g. trout	Wire rack	2		2	20–25[1]
Fish, grilled, whole, 1 kg, e.g. gilthead	Wire rack	2		180–200	45–50[1]
Fish, grilled, whole, 1.5 kg, e.g. salmon	Wire rack	2		170–190	50–60[1]
Fish fillet/fish cutlet, 2–3 cm thick, grilled	Wire rack	3		2	20–25[1]

[1] Slide the universal pan underneath the wire rack.

Tips for next time you roast

If roasting is not successful the first time, you can find some tips here.

Topic	Tip
The roast is too dark and the crackling is partly burnt.	▪ Select a lower temperature. ▪ Reduce the roasting time.

Topic	Tip
Your roast is too dry.	▪ Select a lower temperature. ▪ Reduce the roasting time.
The crackling on your roast is too thin.	▪ Increase the temperature. Or: ▪ Switch on the grill briefly at the end of the roasting time.
Your roasting juices are burnt.	▪ Select a smaller item of cookware. ▪ When roasting, add more liquid.

Topic	Tip
Your roasting juices are too clear and watery.	▪ Use a larger item of cookware so that more liquid evaporates. ▪ When roasting, add less liquid.
The meat is burned slightly during braising.	▪ Check whether the roasting dish and lid fit together and close properly. ▪ Reduce the temperature. ▪ Add liquid when braising.

16.10 Vegetables and side dishes

This is where you can find information about preparing vegetable products that you can use as a side dish for your meals.

Recommended settings

Vegetables and side dishes

Use the settings listed in the table.

Food	Accessories/cookware	Shelf position	Type of heating	Temperature in °C/grill setting	Cooking time in mins
Grilled vegetables	Universal pan	5		3	10–20
Baked potatoes, halved	Universal pan	3		190–210	25–35
Potato products, frozen, e.g. chips, croquettes, potato pockets, rösti	Universal pan	3		200–220	25–35
Chips, 2 levels	Universal pan + Baking tray	3+1		190–210	30–40

16.11 Yoghurt

You can also use your appliance to make your own yoghurt.

Making yoghurt

1. Remove the accessories and shelves from the cooking compartment.
2. Heat 1 litre of milk (3.5% fat) to 90 °C on the hob and then leave it to cool down to 40 °C. Only heat UHT milk to 40 °C.
3. Stir 30 g yoghurt into the milk.
4. Pour the mixture into small containers, e.g. small jars with lids.
5. Cover the containers with film, e.g. cling film.
6. Place the containers on the cooking compartment floor.
7. Use the recommended settings when configuring the appliance settings.
8. After making the yoghurt, leave it to cool in the refrigerator.

Recommended settings

Yoghurt

Meal	Accessory/cookware	Shelf position	Type of heating/ function	Temperature in °C	Cooking time, minutes
Yoghurt	Cup/jar	Cooking compartment floor		-	4–5 hours

16.12 Tips for keeping acrylamide levels to a minimum when cooking

Acrylamide is harmful to your health and is produced when you cook cereal and potato products at very high temperatures.

Meal	Tip
General information	▪ Keep cooking times as short as possible. ▪ Cook food until it is golden brown, but not too dark. ▪ Use large, thick pieces of food. These contain less acrylamide.
Baking	▪ Set max. top/bottom heating to 200 °C. ▪ Set the temperature in hot air mode to max. 180 °C.
Biscuits	▪ Brush baked items and biscuits with egg or egg yolk. This reduces the production of acrylamide.
Oven chips	▪ Spread the chips out evenly and in a single layer on the baking tray. ▪ Cook at least 400 g at once on a baking tray so that the chips do not dry out.

16.13 Drying

You can achieve outstanding drying results for the food using hot air. With this type of preserving, flavours are concentrated as a result of the dehydration.
The temperature and drying time depend on the type, moistness, ripeness and thickness of the food. The longer you leave the food to be dried, the better it will be preserved. The thinner you cut the slices, the quicker the drying process will be and the more flavour the dried food will retain. Settings ranges are specified for this reason.

Preparation for drying

1. Only use unblemished, fresh fruit, vegetables and herbs and wash them thoroughly. Line the wire rack with greaseproof paper or parchment paper. Drain the excess water from the fruit and then dry it.
2. If required, cut the fruit into thin pieces or slices of equal size. Place unpeeled fruit onto the dish with the sliced surfaces facing upwards.
   Ensure that neither fruit nor mushrooms overlap on the wire rack.
3. Grate vegetables and then blanch them. Drain the excess water from the blanched vegetables and spread them evenly on the wire rack.
4. Dry herbs on the stem. Spread the herbs out evenly and slightly heaped on the wire rack.
5. Turn very juicy fruit and vegetables several times. After drying, remove the dried fruit and vegetables from the paper immediately.

Recommended settings

Drying

The table contains settings for drying various foodstuffs. If you want to dry food that is not listed in the table, you should use similar foodstuffs in the table as a reference.

Note:
Use the following shelf positions for drying:
- 1 wire rack: Shelf position 3
- 2 wire racks: Shelf positions 3 + 1

Meal	Accessory/cookware	Shelf position	Type of heating	Temperature in °C	Cooking time, minutes
Pome fruit, e.g. apple rings, 3 mm thick, 200 g per wire rack	Wire rack	3 3+1		80	4–8 hours
Root vegetables, e.g. carrots, grated, blanched	Wire rack	3 3+1		80	4–7 hours
Mushrooms, sliced	Wire rack	3 3+1		80	5–8 hours
Herbs, stalks removed	Wire rack	3 3+1		60	2-5 hours

16.14 Proving dough

You can prove yeast dough more quickly in your appliance than at room temperature.

Proving dough

Always allow yeast dough to prove in two steps: Once in its entirety (dough fermentation) and a second time in the baking tin (final fermentation).

1. Place the dough into a heat-resistant bowl.
2. Place the bowl on the wire rack.
3. Use the recommended settings when configuring the appliance settings.
   Only start operation when the cooking compartment has fully cooled down.
4. Do not open the appliance door while the dough is proving, otherwise moisture will escape.
5. Continue processing the dough and mould it into the final shape for baking.

6. Place the dough into the cooking compartment at the specified shelf position.

Tip: If you want to preheat the oven, do not carry out the final proving stage in the appliance.

Recommended settings

Proving dough

The temperature and time are dependent on the type and quantity of the ingredients. The values in the table are therefore guide values only.

Meal	Accessory/cookware	Shelf position	Type of heating	Temperature in °C	Cooking time, minutes
Yeast dough, light	**1.** Bowl **2.** Universal pan	**1.** 2 **2.** 2	**1.** **2.**	**1.** 50[1] **2.**50[1]	**1.** 25–30 **2.**10–20
Yeast dough, heavy and rich	**1.** Bowl **2.** Universal pan	**1.** 2 **2.** 2	**1.** **2.**	**1.** 50[1] **2.**50[1]	**1.**60–75 **2.**45–60

[1] Preheat the appliance for 5 minutes.

16.15 Defrosting

For defrosting frozen fruit, vegetables and baked items. Poultry, meat and fish should ideally be defrosted in the refrigerator. Not suitable for cream cakes or cream gateaux.
When defrosting food, use the following shelf positions:
- 1 wire rack: Shelf position 2
- 2 wire racks: Shelf positions 3+1

Note: Food that is frozen in thin layers or small portions defrosts more quickly than food frozen in larger blocks.

- Take the food out of its packaging and place in a suitable dish on the wire rack.
- Redistribute the food or turn it once or twice as it defrosts. Turn large pieces of food several times. As the food defrosts, break up any clumps and remove items that have already defrosted from the appliance.
- To allow the temperature to equalise, leave the defrosted food to rest for another 10 to 30 minutes in the appliance after switching it off.

Recommended settings

Defrosting

Meal	Accessory/cookware	Shelf position	Type of heating	Temperature in °C	Cooking time, minutes
Baked items, cake and bread, fruit, vegetables, meat products	Wire rack	2 3+1		-	-

16.16 Test dishes

These overviews have been produced for test institutes to facilitate appliance testing in accordance with EN 60350-1.

Baking

Please take note of the following information if you are baking test dishes.

General information
- The setting values apply to food placed in the cooking compartment while the cooking compartment is still cold.
- Observe the notes about preheating in the tables. These setting values assume that the rapid heating function is not being used.
- When baking, use the lower of the listed temperatures to begin with.

Shelf positions
Shelf positions for baking on one level:
- Universal pan/baking tray: Shelf position 3
- Baking tins on the wire rack: Shelf position 2

Note: Items that are placed in the oven on baking trays or in baking tins/dishes at the same time will not necessarily be ready at the same time.

Shelf positions for baking on two levels:
- Universal pan: Shelf position 3
  Baking tray: Shelf position 1
- Baking tins on the wire rack:
  First wire rack: Shelf position 3
  Second wire rack: Shelf position 1

Shelf positions for baking on three levels:
- Baking tray: Shelf position 5
  Universal pan: Shelf position 3
  Baking tray: Shelf position 1

Baking with two springform cake tins:

If you can use your appliance to cook on multiple levels, position baking tins either next to one another or offset on different shelves so that they are not directly one above the other in the cooking compartment.

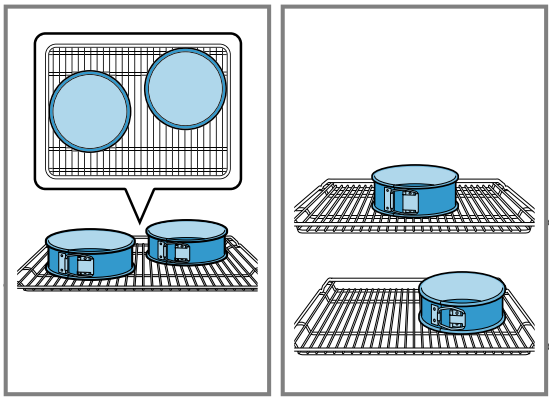

Recommended settings

Baking

Meal	Accessory/cookware	Shelf position	Type of heating	Temperature in °C	Cooking time, minutes
Viennese whirls	Universal pan	3		140–150	30–40
Viennese whirls	Universal pan	3		140–150	30–40
Viennese whirls, 2 levels	Universal pan + Baking tray	3+1		140–150[1]	30–45
Viennese whirls, 3 levels	2x Baking tray + Universal pan	5+3+1		130–140[1]	40–55
Small cakes	Universal pan	3		150[1]	25–35
Small cakes	Universal pan	3		150[1]	25–35
Small cakes, 2 levels	Universal pan + Baking tray	3+1		150[1]	25–35
Small cakes, 3 levels	2x Baking tray + Universal pan	5+3+1		140[1]	35–45
Hot water sponge cake	Springform cake tin, diameter 26 cm	2		160–170[2]	30–40
Hot water sponge cake	Springform cake tin, diameter 26 cm	2		170	30–40
Hot water sponge cake, 2 levels	Springform cake tin, diameter 26 cm	3+1		150–160[2]	30–45

[1] Preheat the appliance for 5 minutes. For appliances with the rapid heating function, do not use this function for preheating.
[2] Preheat the appliance. For appliances with the rapid heating function, do not use this function for preheating.

Grilling

Food	Accessories/cookware	Shelf position	Type of heating	Temperature in °C/grill setting	Cooking time in mins
Toasting bread	Wire rack	5		3	0.2–1.5

17 Installation instructions

Observe this information when installing the appliance.

17.1 Important information

This appliance is designed for use up to a maximum height of 4000 metres above sea level. Do not use the door handle to transport or install the appliance. The appliance must be disconnected from the power supply whenever installation work is being carried out.

- Only an appliance which has been correctly installed in accordance with these installation instructions can be used safely. The installer shall be liable for damages incurred as a result of incorrect installation.
- Check the appliance for damage after unpacking it. Do not connect the appliance if it has been damaged in transport.
- Proceed in accordance with the installation sheets for installing accessories.
- Before starting up the appliance, remove any packaging material and adhesive film from the cooking compartment and the door.
- Fitted units must be heat-resistant up to 90 °C, and adjacent unit fronts up to 70 °C.
- Do not install the appliance behind a decorative door or the door of a kitchen unit. Risk of overheating.
- Cut-out work on the units should be carried out before installing the appliance. Remove any shavings. Otherwise, the correct operation of electrical components may be adversely affected.
- To prevent cuts, wear protective gloves. Parts that are accessible during installation may have sharp edges.
- Dimensions of the figures in mm

17.2 Appliance dimensions

You can find the appliance dimensions here.

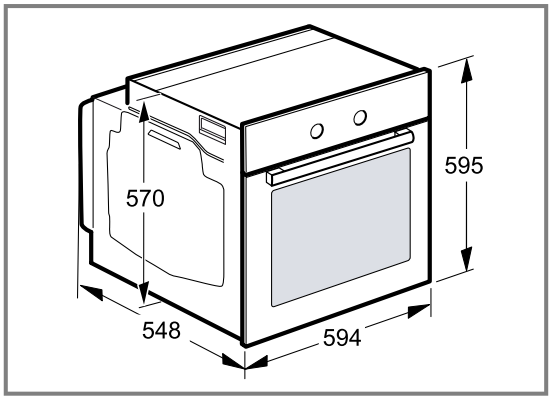

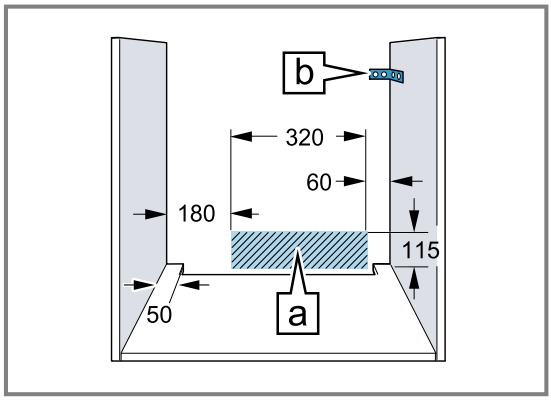

- The mains socket for the appliance must either be located in the hatched area A or outside of the area where the appliance is installed.
- Secure freestanding units to the wall using a standard bracket B.

17.3 Installing the appliance below a worktop

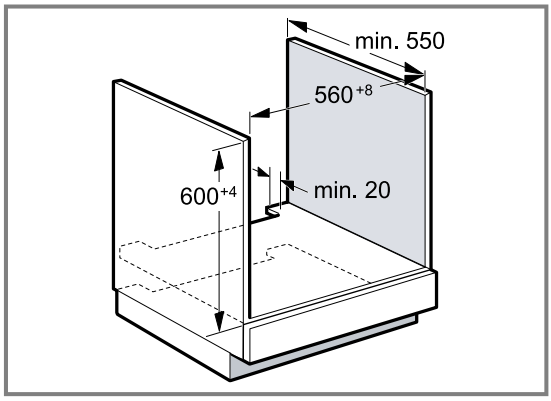

- To ventilate the appliance, the intermediate floor must have a ventilation cut-out.
- Secure the worktop to the built-in unit.
- Observe the installation instructions for the hob.

17.4 Installation in a tall unit

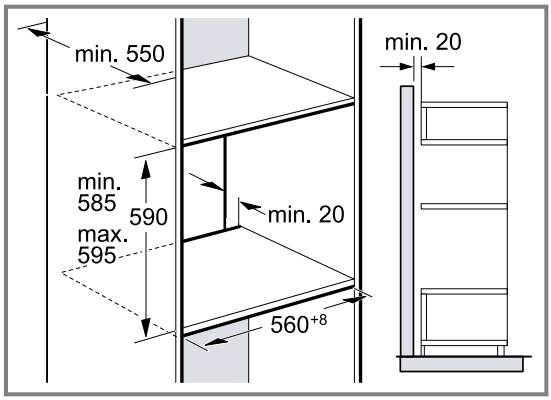

- To ventilate the appliance, the intermediate floor must have a ventilation cut-out.
- If the tall unit has another back panel in addition to the element back panels, remove this.
- Only fit the appliance up to a height which allows accessories to be easily removed.

17.5 Corner installation

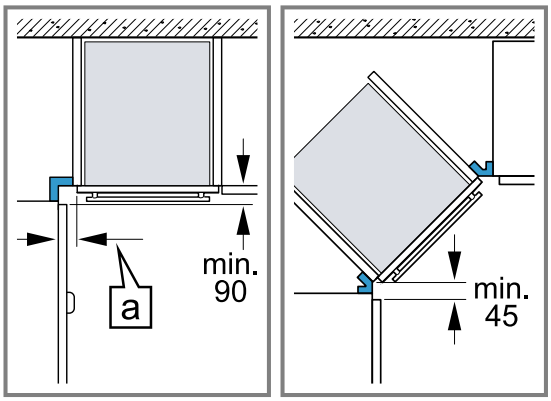

- Observe the minimum dimensions in a corner installation in order to be able to open the cover of the appliance. The dimension a depends on the thickness of the furniture panel and the handle.

17.6 Electrical connection

In order to safely connect the appliance to the electrical system, follow these instructions.

- Before using the appliance for the first time, you must ensure that your domestic power supply is earthed and complies with the effective safety requirements. The installation of the appliance must be carried out by a qualified technician. Observe the provisions of the local electricity supply company and the general laws. In rare cases, a missing productive conductor or incorrect installation may lead to material damage or serious injuries, such as death or injury caused by electric shock. The manufacturer accepts no responsibility for personal injuries or damage to the appliance due to faulty or incorrect electrical connection.
- The appliance must always be disconnected from the power supply when installation work is being carried out.
- The appliance fulfils the requirements of protection class I and must only be connected to an earthed mains socket.
- The H05 V V-F 3G mains connection cable must be at least 1.5 mm². The yellow-green conductor must be connected first and be slightly longer than the two other wires on the appliance side.
- In accordance with safety regulations, an all-pole separator with at least a 3 mm contact opening must be provided. A separator is not required during connection, which is carried out via an earthed power socket that is easily accessible at all times.
- Contact protection must be guaranteed during installation.
- Determine the phase conductor and neutral conductor (zero conductor) in the socket. The appliance may be damaged if it is not connected correctly.
- Connect the oven in accordance with the specifications on the rating plate.
- Place the appliance in front of the surround unit to connect it. The connection cable must be long enough. Caution: During the installation, ensure that the power cord is not jammed and does not come into contact with hot appliance parts.
- All work on the appliance, including replacing the cabling, must only be carried out by the after-sales service.

17.7 Important information about the electrical connection

Note the following information and ensure that:

⚠ **WARNING – Risk of electric shock!**
There is a risk of electric shock if you touch live components.

- ▸ Hold the mains plug with dry hands only.
- ▸ Never pull out the mains plug from the socket while the appliance is in operation.
- ▸ Pull out the power cable directly at the plug and never by pulling the power cable as this may become damaged.

- Fit the mains plug and socket together.
- The mains plug can be accessed at all times.
- The cross section of the cable is sufficient.
- The mains cable is not kinked, crushed, modified or severed.
- If required, the mains cable must only be replaced by a qualified electrician. A replacement mains cable is available from the after-sales service.
- Do not use any multiple plugs or multi-connectors and extension cords.
- The earthing system is correctly installed.
- If using a residual current device, only use one that bears the mark ⊠. The presence of this mark is the only way to be sure that it fulfils all the applicable regulations.
- The mains cable does not come into contact with heat sources.

17.8 Power cable with protective contact plug

Connect the appliance only to a correctly installed, earthed socket.
If the plug can no longer be accessed following installation, provide a separator in the phases in the fixed electrical installation in accordance with the set-up instructions.

17.9 Power cable without protective contact plug

Only allow a licensed professional to connect the appliance.
Provide a separator in the phases in the fixed electrical installation in accordance with the construction instructions. Identify the phase conductor and the neutral conductor (zero conductor) in the socket. An incorrect connection may damage the appliance.
Only connect in accordance with the connection diagram. The information about the voltage can be found on the rating plate. Connect the wires of the mains power cable according to the colour coding:

Cable colour	Cable type
Green-yellow	Earthing cable ⏚

Cable colour	Cable type
Blue	Neutral conductor (zero)
Brown	Phase conductor (external conductor)

17.10 Securing the appliance

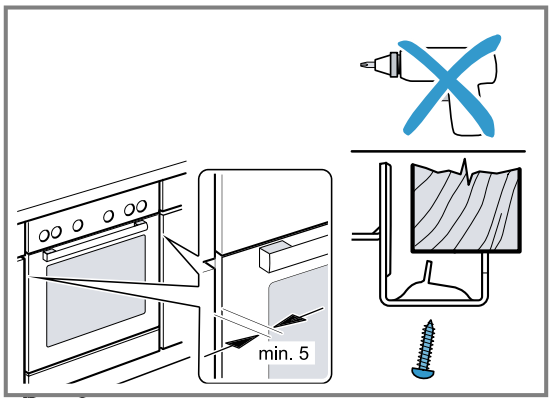

- Slide the appliance in fully and centre it.
- Screw the appliance into place.

The gap between the worktop and the appliance must not be closed by additional battens.
Do not attach any thermal insulation strips to the side panels of the surround unit.
To remove:

- Disconnect the appliance from the power supply.
- Undo the fastening screws.
- Lift the appliance slightly and pull it out completely.

Thank you for buying a Bosch Home Appliance!

Register your new device on MyBosch now and profit directly from:

- **Expert tips & tricks for your appliance**
- **Warranty extension options**
- **Discounts for accessories & spare-parts**
- **Digital manual and all appliance data at hand**
- **Easy access to Bosch Home Appliances Service**

Free and easy registration – also on mobile phones:
www.bosch-home.com/welcome

Looking for help? You'll find it here.

Expert advice for your Bosch home appliances, help with problems or a repair from Bosch experts.
Find out everything about the many ways Bosch can support you:
www.bosch-home.com/service
Contact data of all countries are listed in the attached service directory.

BSH Hausgeräte GmbH
Carl-Wery-Straße 34
81739 München, GERMANY
www.bosch-home.com

A Bosch Company

9001771067 (020809)
en