BOSCH

Register your new device on MyBosch now and get free benefits: **bosch-home.com/welcome**

MyBosch

Tumble dryer

WQG24590BY

[en] User manual and installation instructions

Futher information and explanations are available online:

Table of contents

1 Safety 4
1.1 General information 4
1.2 Intended use 4
1.3 Restriction on user group 4
1.4 Safe installation 5
1.5 Safe use 7
1.6 Safe cleaning and maintenance 9

2 Preventing material damage 11

3 Environmental protection and saving energy 11
3.1 Disposing of packaging 11
3.2 Saving energy 11
3.3 Energy saving mode 12

4 Installation and connection 12
4.1 Unpacking the appliance 12
4.2 Scope of delivery 12
4.3 Requirements for the installation location 13
4.4 Water drain hose 13
4.5 Aligning the appliance 16
4.6 Connecting the appliance to the electricity supply 16

5 Familiarising yourself with your appliance 17
5.1 Appliance 17
5.2 Control panel 18

6 Display 19

7 Buttons 22

8 Dryness level 25
8.1 Changing the dryness level 25
8.2 Adjusting the dryness level 25

9 Programmes 26
9.1 Automatic programmes 26
9.2 Timed programmes 27

10 Accessories 28

11 Laundry 29
11.1 Preparing the laundry 29

12 Basic operation 29
12.1 Switching on the appliance 29
12.2 Setting a programme 29
12.3 Loading laundry 29
12.4 Starting the programme 30
12.5 Adding laundry 30
12.6 Cancelling the programme 30
12.7 Unloading the laundry 30
12.8 Switching off the appliance 30
12.9 Fluff filter 30
12.10 Condensation container 32

13 Childproof lock 33
13.1 Activating the childproof lock 33
13.2 Deactivating the childproof lock 33

14 Crease-removal function 33
14.1 Starting a programme with the crease-removal function 33
14.2 Filling the water tank 34

15 Basic settings 35
15.1 Overview of the basic settings 35
15.2 Changing the basic settings 36

16 Appliance care 36
16.1 Preparing the appliance for the appliance care programme 36
16.2 Preparing the condensation container for the appliance care programme..... 37
16.3 Starting the appliance care programme..... 37
16.4 Running the basic appliance care programme on the appliance..... 37
16.5 Preparing the appliance for the intensive appliance care programme..... 39
16.6 Running the intensive appliance care programme 39
16.7 Ending the intensive appliance care programme 41

17 Cleaning and servicing..... 42
17.1 Tips on cleaning and care 42
17.2 Water tank filter 42
17.3 Moisture sensor..... 42
17.4 Condensation container filter 43

18 Troubleshooting..... 45

19 Transportation, storage and disposal 50
19.1 Preparing the appliance for transportation 50
19.2 Disposing of old appliance 50

20 Customer Service..... 51
20.1 Product number (E-Nr.) and production number (FD)..... 51

21 Consumption values..... 52

22 Technical data 53

1 Safety

Observe the following safety instructions.

1.1 General information

- Read this instruction manual carefully.
- Keep the instruction manual and the product information safe for future reference or for the next owner.
- Do not connect the appliance if it has been damaged in transit.

1.2 Intended use

Only use this appliance:
- For drying and freshening up fabrics that are washed with water and suitable for dryers.
- In private households and in enclosed spaces in a domestic environment.
- Up to an altitude of max. 4000 m above sea level.

1.3 Restriction on user group

This appliance may be used by children aged 8 or over and by people who have reduced physical, sensory or mental abilities or inadequate experience and/or knowledge, provided that they are supervised or have been instructed on how to use the appliance safely and have understood the resulting dangers.
Do not let children play with the appliance.
Cleaning and user maintenance must not be performed by children unless they are being supervised.
Keep children under the age of 3 years and pets away from the appliance.

1.4 Safe installation

Take note of the safety instructions when installing the appliance.

⚠ WARNING – Risk of electric shock!

Incorrect installation is dangerous.

- Connect and operate the appliance only in accordance with the specifications on the rating plate.
- Connect the appliance to a power supply with alternating current only via a properly installed socket with earthing.
- The protective conductor system of the domestic electrical installation must be properly installed. The installation must have a sufficiently large cross section.
- When using a residual current circuit breaker, only use a type with the ⊠ mark.
- Never equip the appliance with an external switching device, e.g. a timer or remote control.
- Never connect the appliance to a circuit that is regularly switched on and off by the energy supplier.
- When the appliance is installed, the mains plug of the power cord must be freely accessible. If free access is not possible, an all-pole isolating switch must be installed in the permanent electrical installation according to the installation regulations.
- When installing the appliance, check that the power cable is not trapped or damaged.

If the insulation of the power cord is damaged, this is dangerous.

- Never let the power cord come into contact with hot appliance parts or heat sources.
- Never let the power cord come into contact with sharp points or edges.
- Never kink, crush or modify the power cord.

⚠ WARNING – Risk of fire!

It is dangerous to use an extended power cord and non-approved adapters.

- Do not use extension cables or multiple socket strips.
- Only use adapters and power cords approved by the manufacturer.

- If the power cord is too short and a longer one is not available, please contact an electrician to have the domestic installation adapted.

⚠ WARNING – Risk of injury!

The high weight of the appliance may result in injury when lifted.

- Do not lift the appliance on your own.

If this appliance is not correctly installed in a washer-dryer stack, the installed appliance may fall.

- Only stack the dryer on a washing machine using the connection kit from the dryer manufacturer
  → *"Accessories", Page 28*. No other installation method is permitted.
- Do not install the appliance in a washer-dryer stack if the dryer manufacturer does not offer a suitable connection kit.
- Do not install appliances from different manufacturers and with varying depths and widths in a washer-dryer stack.
- Do not install a washer-dryer stack on a platform; the appliances may tip over.

⚠ WARNING – Risk of suffocation!

Children may put packaging material over their heads or wrap themselves up in it and suffocate.

- Keep packaging material away from children.
- Do not let children play with packaging material.

⚠ CAUTION – Risk of injury!

The appliance may vibrate or move when in use.

- Place the appliance on a clean, even, solid surface.
- Align the appliance using the appliance feet and a spirit level.

If hoses and power cords have been laid incorrectly, this causes a tripping hazard.

- Lay hoses and power cords in such a way that there is no risk of tripping.

If the appliance is moved by holding onto protruding components, such as the appliance door, the parts may break off.

- Do not move the appliance by holding onto protruding parts.

⚠ CAUTION – Risk of cutting!
Touching sharp edges on the appliance may lead to cuts.
- Do not touch the sharp edges on the appliance.
- Wear protective gloves when installing and transporting the appliance.

1.5 Safe use

⚠ WARNING – Risk of electric shock!
If the appliance or the power cord is damaged, this is dangerous.
- Never operate a damaged appliance.
- Never pull on the power cord to unplug the appliance. Always unplug the appliance at the mains.
- If the appliance or the power cord is damaged, immediately unplug the power cord or switch off the fuse in the fuse box.
- Call customer services. → *Page 51*

An ingress of moisture can cause an electric shock.
- Only use the appliance in enclosed spaces.
- Never expose the appliance to intense heat or humidity.
- Do not use steam- or high-pressure cleaners, hoses or sprays to clean the appliance.

⚠ WARNING – Risk of harm to health!
Children can lock themselves in the appliance, thereby putting their lives at risk.
- Do not install the appliance behind a door as this may obstruct the appliance door or prevent it from opening.
- With redundant appliances, unplug the power cord. Then cut through the cord and damage the lock on the appliance door beyond repair so that the appliance door will no longer close.

⚠ WARNING – Risk of suffocation!
Children may breathe in or swallow small parts, causing them to suffocate.
- Keep small parts away from children.
- Do not let children play with small parts.

⚠ WARNING – Risk of explosion!

If there is coal dust or flour in the air around the appliance, this may cause an explosion.

- Keep the area around the appliance clean during operation.

⚠ WARNING – Risk of poisoning!

Condensation water from this appliance is not suitable for drinking and may be contaminated with fluff.

- Do not drink or reuse the condensation water from the appliance.

Detergents and care products may result in poisoning if consumed.

- If accidentally swallowed, seek medical advice.
- Keep detergents and care products out of the reach of children.

⚠ WARNING – Risk of fire!

The refrigerant R290 in this appliance is environmentally friendly yet combustible and may ignite if it comes into contact with open flames or ignition sources.

- Keep naked flames and ignition sources away from the appliance.

⚠ WARNING – Risk of explosion!

If there is any residual material left in the fluff filter, this may ignite during the drying process.

- Clean the fluff filter regularly.

Highly flammable objects such as lighters or matches may ignite during the drying process.

- Remove all highly flammable objects from any pockets in your laundry before the drying process.

Unwashed laundry that has come into contact with solvents, oil, wax, wax remover, paint, grease or stain remover may ignite when drying is in progress.

- Do not place laundry in this appliance to be dried if the laundry has not been washed first.

- Rinse the laundry thoroughly with warm water and detergent before drying it in the machine.
- Do not use the appliance if industrial chemicals have been used to clean the laundry beforehand.

⚠ WARNING – Risk of fire!
If drying is interrupted early, the laundry is not cooled sufficiently and may ignite.
- Do not interrupt the drying programme early.
- If drying is interrupted early, remove the laundry immediately and spread it out.

⚠ CAUTION – Risk of injury!
The covering plate may break if you stand on or climb onto the appliance.
- Do not stand on or climb onto the appliance.

The appliance may tip over if you sit on or lean against the open door.
- Do not sit on or lean against the appliance door.
- Do not place any objects on the appliance door.

Reaching into the drum while it is still turning may cause hand injuries.
- Wait for the drum to come to a complete stop before reaching inside.

1.6 Safe cleaning and maintenance

Take note of the safety instructions when cleaning and performing maintenance work on the appliance.

⚠ WARNING – Risk of electric shock!
Incorrect repairs are dangerous.
- Repairs to the appliance should only be carried out by trained specialist staff.
- Only use genuine spare parts when repairing the appliance.
- If the power cord of this appliance is damaged, it must be replaced by the manufacturer, the manufacturer's Customer Service or a similarly qualified person in order to prevent any risk.

An ingress of moisture can cause an electric shock.

- Do not use steam- or high-pressure cleaners, hoses or sprays to clean the appliance.

⚠ WARNING – Risk of injury!

The use of non-original spare parts and non-original accessories is dangerous.

- Only use the manufacturer's original spare parts and original accessories.

⚠ WARNING – Risk of poisoning!

Poisonous fumes may be given off if you use cleaning agents that contain solvents.

- Do not use cleaning agents that contain solvents.

2 Preventing material damage

Follow these instructions to avoid material damage and damage to the appliance.

ATTENTION!
The functionality of the appliance may be impaired if you use the wrong quantity of fabric softener, detergent, care product or cleaning agent.
- Follow the dosage recommendations from the manufacturer.

Exceeding the maximum load capacity impairs the function of the appliance.
- Observe the maximum load capacity for each programme and do not exceed it.
  → *"Programmes", Page 26*

The function of the appliance may be impaired if the appliance overheats.
- During operation, keep the air inlet on the appliance clear.
- Make sure that the area is adequately ventilated.

Light objects such as hair and fluff may be sucked into the air inlet on the appliance during operation and impair the function of the appliance.
- Keep the area around the appliance clean during operation.
- Keep light objects away from the appliance.

Foam and foam rubber may deform or melt during the drying process.
- Do not dry laundry that contains foam or foam rubber.

Unsuitable cleaning products may damage the surfaces of the appliance.
- Do not use harsh or abrasive detergents.
- Do not use cleaning products with a high alcohol content.
- Do not use hard scouring pads or cleaning sponges.
- Clean the appliance with nothing but water and a soft, damp cloth.
- Remove all detergent residue, spray residue or other residues immediately if they come into contact with the appliance.

3 Environmental protection and saving energy

3.1 Disposing of packaging

The packaging materials are environmentally compatible and can be recycled.
- Sort the individual components by type and dispose of them separately.

3.2 Saving energy

If you follow these instructions, your appliance will use less power.

Operate the appliance in a well-ventilated room and keep the air inlet on the appliance clear.
- ✔ If air exchange is impeded, this extends the programme duration and increases energy consumption.

Spin the laundry in the washing machine before drying.
- ✔ If the laundry is excessively damp, this extends the programme duration and increases energy consumption.

Observe the programme's maximum load capacity.
→ *"Programmes", Page 26*

- ✔ If the maximum load is exceeded, this extends the programme duration and increases energy consumption.

After drying, clean the fluff filter
→ *Page 30*.

- ✔ If the fluff filter is dirty, this reduces the air flow in the appliance, extends the programme duration and increases energy consumption.

3.3 Energy saving mode

If you do not use the appliance for an extended period, it automatically switches to energy-saving mode. All displays go out and ▷II **Start/Reload** flashes.
Energy-saving mode ends when you use the appliance again.

4 Installation and connection

4.1 Unpacking the appliance

ATTENTION!
Objects remaining in the drum that are not designed for operation with the appliance may cause material damage and damage to the appliance.

- ▸ Remove these objects, along with all supplied accessories, from the drum before starting the appliance.

1. Remove any packaging and protective covers completely from the appliance.
   → *"Disposing of packaging", Page 11*
2. Check the appliance for visible damage.
3. Open the appliance door.
   → *"Basic operation", Page 29*
4. Remove any accessories from the drum.
5. Close the appliance door.

4.2 Scope of delivery

After unpacking all parts, check for any damage in transit and completeness of the delivery.

ATTENTION!
If the appliance is operated with incomplete or defective accessories, the appliance may not be able to operate properly, or this may result in material damage or damage to the appliance.

- ▸ Do not operate the appliance with incomplete or defective accessories.
- ▸ Replace the accessories in question before operating the appliance.
  → *"Accessories", Page 28*

Included with the appliance	Description
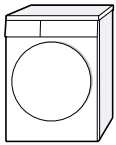	Tumble dryer
	Accompanying documents
	Water drain hose with connection adapter, fixing material and elbow. → *"Water drain hose", Page 13*

Included with the appliance	Description
	Water jug → *"Filling the water tank", Page 34*

4.3 Requirements for the installation location

ATTENTION!
If the appliance is tilted at an angle greater than 40°, residual water may leak out of the appliance and cause material damage.
- ▸ Tilt the appliance carefully.
- ▸ Transport the appliance in an upright position.

If residual water in the appliance freezes, this may cause damage to the appliance.
- ▸ Do not install or operate this appliance anywhere that is liable to experience frost or outdoors.

If the appliance is operated immediately after transportation, the refrigerant contained in the appliance may result in damage to the appliance.
- ▸ Immediately after transporting the appliance, leave it to rest for two hours before putting it into operation.

Installation location	Requirements
On the floor 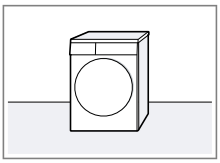	Place the appliance on a clean, level and firm surface. Align the appliance → *Page 16*.
In a washer-dryer stack 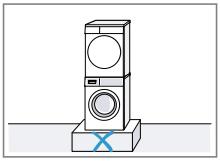	Only use the original connection set from the dryer manufacturer when setting up this appliance in a washer-dryer stack. → *"Accessories", Page 28* → *"Accessories", Page 28* This appliance must only be stacked on a washing machine from the same manufacturer. The depth and width of this appliance must correspond with the dimensions of the washing machine. Do not place the washer-dryer stack on a platform.
Against a wall 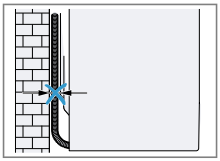	Do not trap the hoses between the wall and the appliance.

4.4 Water drain hose

Condensation forms during drying, which your appliance uses for automatic cleaning. Use the water drain

hose to drain away excess condensation directly into the waste water system.

Notes

- Operate this appliance using the water drain hose provided. If you connect the water drain hose → *Page 14*, you do not have to regularly empty the condensation container → *Page 32*.
- You can order this optional → *"Accessories", Page 28* from our customer service.

Connecting the water drain hose

If you do not want to regularly empty the appliance's condensation container, connect the water drain hose.

ATTENTION!
When operating the appliance without the water drain hose being connected properly, liquid may leak out of the connecting piece.

- ▸ Before operating the appliance, connect the water drain hose properly to the connecting piece.

Requirements

- The appliance and the accessory have been unpacked. → *"Unpacking the appliance", Page 12*
- The appliance is installed at the installation location. → *"Requirements for the installation location", Page 13*

1. Pull out the condensation hose from the connecting piece.

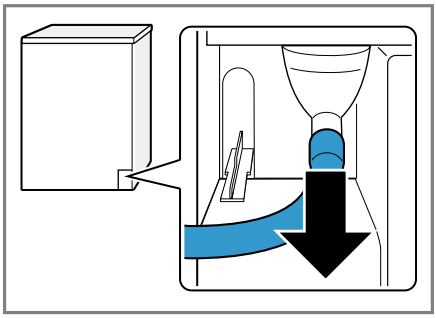

The condensation hose is connected to the connecting piece at the factory.

Note: When removing the condensation hose, liquid may leak out of the connecting piece.

2. Push the condensation hose into the holder.

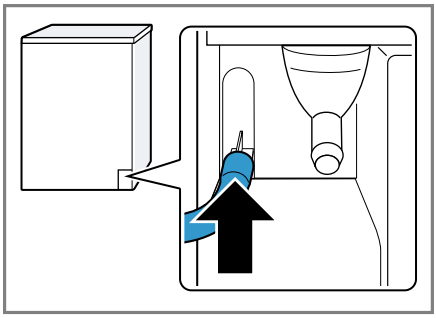

3. Push the water drain hose as far as it will go into the connecting piece.

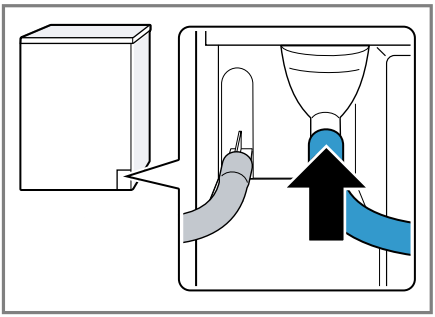

4. Empty the condensation container → *Page 32*.

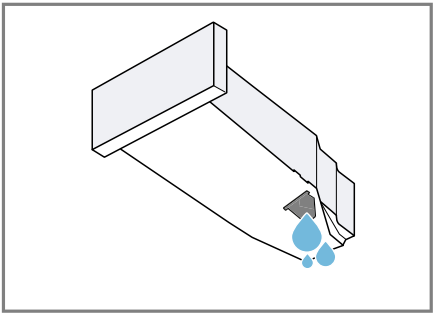

5. Remove the stopper on the underside.

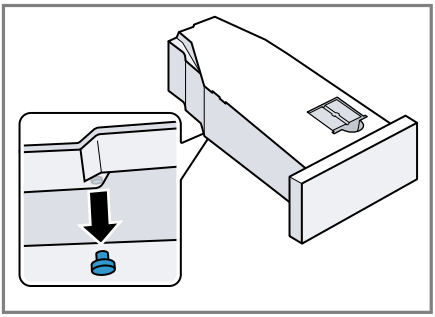

6. Insert the stopper into the recess in the top.

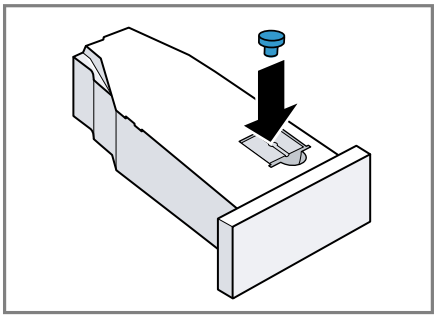

7. Insert the condensation container → *Page 33*.
8. Connect the appliance to the water outlet.
→ *"Water outlet connection types", Page 15*

Tip: To collect condensation in the condensation container again (e. g. if you change where the appliance is located), carry out these steps in reverse order.

Water outlet connection types

ATTENTION!
In the event of a blocked or covered outlet, accumulated wastewater can flow back into the appliance.

- Before operating the appliance, ensure that the wastewater drains away quickly and eliminate any blockages.

Drainage into a siphon. 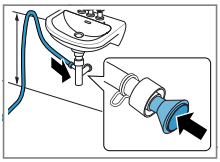	Secure the connection point with a (12-22 mm) hose clamp. Secure the water drain hose with a hose guide at a height of at least 80 cm and no more than 100 cm.

	Note: You can use the Y-distributor → *Page 28* to connect the water drain hose of an additional appliance, such as a washing machine, to the same siphon outlet.
Drainage into a wash basin. 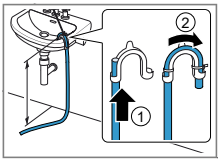	Push the water drain hose fully through the and secure it using fixing material. Secure the elbow at a height of no more than 100 cm.
Drainage into a gully. 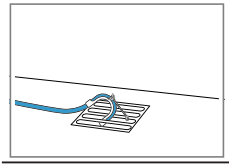	Push the water drain hose fully through the and secure it using fixing material. Secure the elbow to the gully.

4.5 Aligning the appliance

In order to reduce vibrations and noises, align the appliance correctly.

- To align the appliance, turn the appliance feet. Check that the appliance is level using a spirit level.

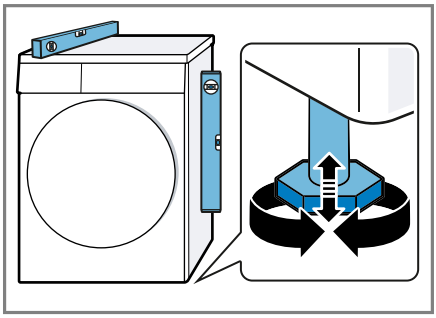

All appliance feet must stand firmly on the ground.

4.6 Connecting the appliance to the electricity supply

1. Insert the mains plug of the appliance's power cable in a socket nearby.

   The connection details of the appliance can be found under Technical data → *Page 53*.
2. Check the mains plug is inserted properly.

5 Familiarising yourself with your appliance

5.1 Appliance

You can find an overview of the parts of your appliance here.

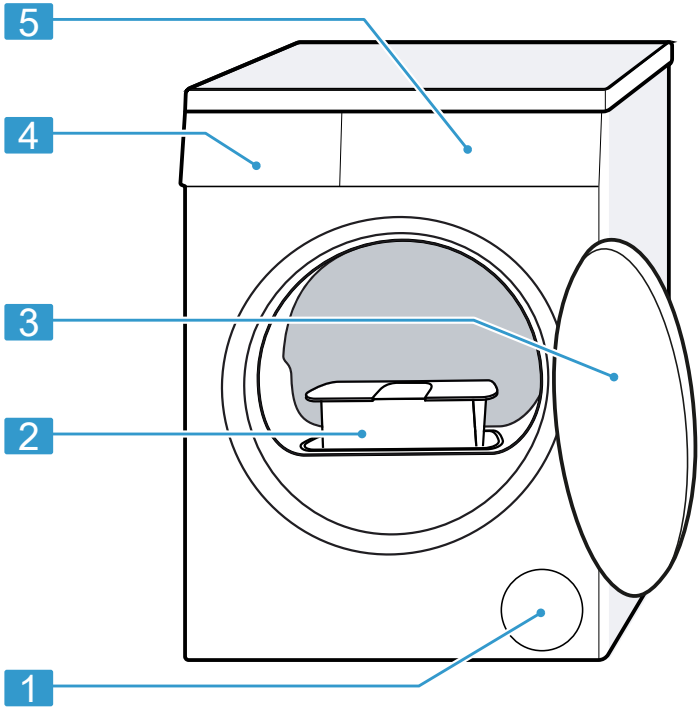

On certain models, specific details such as the colour and shape may differ from those pictured.

1	Air inlet
2	Fluff filter → *Page 30*
3	Door
4	Condensation container → *Page 32*
5	Control panel → *Page 18*

5.2 Control panel

You can use the control panel to configure all functions of your appliance and to obtain information about the operating status.

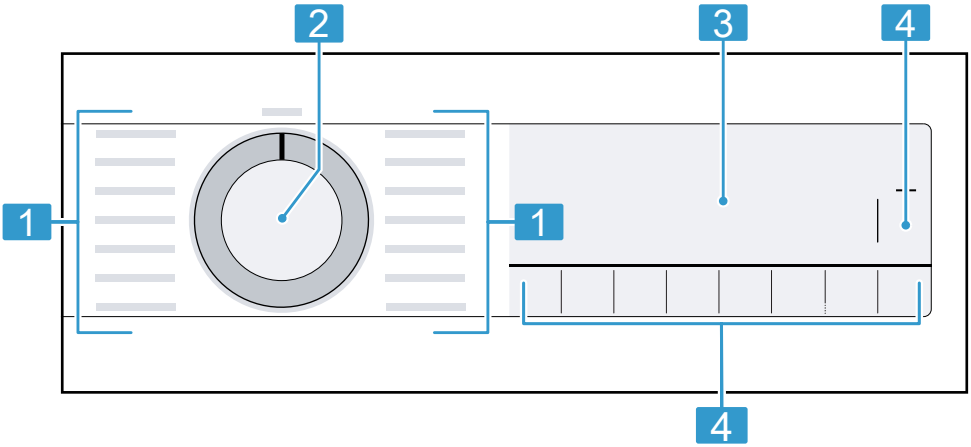

1	Programmes → *Page 26*
2	Programme selector → *Page 29*
3	Display → *Page 19*
4	Buttons → *Page 22*

6 Display

The display shows the current settings, options or relevant information.

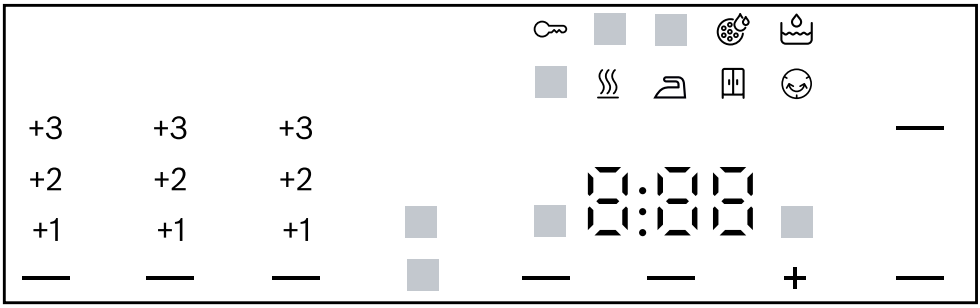

Example: Display

Display	Designation	Description
0:40 [1]	Programme duration/programme time remaining	Approximate expected programme duration or programme time remaining.
1:25	Timed programme	The timed programme is set. → *"Timed programmes", Page 27*
9,0 kg[1]	Recommended load	The maximum load capacity for the selected programme in kg.
+ 0:45 [1]	"Ready in" time	→ *"Buttons", Page 24*
	Childproof lock	■ lights up: The childproof lock is activated. ■ flashes: The childproof lock is activated and the appliance has been operated. → *"Deactivating the childproof lock", Page 33*
— (▷II Start/ Reload)	Start/Pause	Start, cancel or pause ■ Lights up: The programme is running and can be cancelled or paused. ■ Flashes: The programme can be started or continued.

[1] Example

Display	Designation	Description
▬ (Iron Dry)	Dryness level: Iron Dry	The dryness level is activated. → *"Buttons", Page 23*
▬ (Cupboard Dry)	Dryness level: Cupboard Dry	The dryness level is activated. → *"Buttons", Page 23*
▬ (Cupboard Dry Plus)	Dryness level: Cupboard Dry Plus	The dryness level is activated. → *"Buttons", Page 22*
+1 +2 +3	Dryness level adjusted	The adjusted dryness level is activated. → *"Buttons", Page 22* → *"Buttons", Page 23* → *"Buttons", Page 23*
▬ (Less Ironing)	Crease-reduction function	The crease-reduction function is activated. → *"Buttons", Page 23*
▬ (Gentle)	Gentle drying	Gentle drying is activated for delicate fabrics. → *"Buttons", Page 23*
4.5 kg ▬ (Half Load)	Half load	Half load is activated. → *"Buttons", Page 24*
▬ ( )	Quiet drying	Quiet drying with no audible signals is activated. → *"Buttons", Page 24*
	Condensation container	Empty the condensation container → *Page 32*. Insert the condensation container → *Page 33*.
	Fluff filter	Clean the fluff filter → *Page 30*.
CrE	Basic appliance care programme	Run the basic appliance care programme. → *"Running the basic appliance care programme on the appliance", Page 37*
	Water tank	Fill the water tank → *Page 34* for the crease-removal function.
Hot	Cooling process	The laundry is cooled while the drum is rotating, in order to avoid damage to the laundry. The process can be cancelled by opening the door. **Note:** Do not change the programme.

[1] Example

Display	Designation	Description
	Automatic self-cleaning	The automatic self-cleaning function rinses the appliance's heat exchanger. **Note:** Do not remove the condensation container and do not interrupt the programme.
	Drying	Programme status
	Dryness level: Iron Dry	Programme status
	Dryness level: Cupboard Dry	Programme status
	Anti-crease	Programme status
	Crease-removal function	Programme status
— (▷II Start/ Reload)	Pause	Programme status
End	End of programme	Programme status

[1] Example

7 Buttons

Below is an overview of the buttons and their setting options.

Button	Selection	Description
Start/Reload	■ Start ■ Cancel ■ Pause	Start, cancel or pause the programme.
3 sec.	■ Activate ■ Deactivate	Activate or deactivate the childproof lock. Disable the control panel to prevent unwanted or accidental operation. If the childproof lock is activated and the appliance has been switched off, the childproof lock remains activated. → *"Childproof lock", Page 33*
Cupboard Dry Plus	■ Cupboard Dry Plus ■ +1 ■ +2 ■ +3	■ Selecting Cupboard Dry Plus activates the dryness level. The dryness level defines how damp or dry the laundry is after the programme ends. → *"Dryness level", Page 25* ■ The dryness level can be adjusted by selecting +1, +2 or +3. → *"Adjusting the dryness level", Page 25*

Button	Selection	Description
Cupboard Dry	■ Cupboard Dry ■ +1 ■ +2 ■ +3	■ Selecting Cupboard Dry activates the dryness level. The dryness level defines how damp or dry the laundry is after the programme ends. → *"Dryness level", Page 25* ■ The dryness level can be adjusted by selecting +1, +2 or +3. → *"Adjusting the dryness level", Page 25*
Iron Dry	■ Iron Dry ■ +1 ■ +2 ■ +3	■ Selecting Iron Dry activates the dryness level. The dryness level defines how damp or dry the laundry is after the programme ends. → *"Dryness level", Page 25* ■ The dryness level can be adjusted by selecting +1, +2 or +3. → *"Adjusting the dryness level", Page 25*
Less Ironing	■ Activate ■ Deactivate	Activate or deactivate the crease-reduction function. Once the programme has ended, the drum moves the laundry at regular intervals for 60 minutes to prevent creasing.
Gentle	■ Activate ■ Deactivate	Activate or deactivate gentle drying. The temperature is reduced for delicate fabrics, e.g. polyacrylic or elastane. The programme duration is extended.

Button	Selection	Description
Finished in	■ Programme end ■ Programme length	■ Set the programme end. The programme duration is already included in the set number of hours. Once the programme has started, the programme duration is displayed. ■ Set the programme duration for timed programmes. → *"Timed programmes", Page 27*
	■ Activate ■ Deactivate	Activate or deactivate the audible signal after the programme ends.
Half Load	■ Activate ■ Deactivate	Dry individual items of laundry or small loads of laundry.

8 Dryness level

Each automatic programme has a specified dryness level. The dryness level defines how dry or damp your laundry is after the programme ends.

Dryness level	Laundry	Drying result
Cupboard Dry Plus	Multi-layered, thick laundry that does not dry readily.	The laundry is dry.
Cupboard Dry	Normal, single-layered laundry.	The laundry is dry.
Iron Dry	Normal, single-layered laundry	The laundry is still a little damp after drying. To prevent creasing after drying, iron the laundry or hang it up.

8.1 Changing the dryness level

For some automatic programmes, you can change the dryness level so that your laundry will be drier or more damp.

1. Set an automatic programme.
   → *"Automatic programmes", Page 26*
   ✔ The display shows the specified dryness level.
2. Press **Cupboard Dry** , **Cupboard Dry Plus** or **Iron Dry** .
   ✔ The display shows: — (Cupboard Dry), — (Cupboard Dry Plus) or — (Iron Dry)

8.2 Adjusting the dryness level

If the laundry feels too damp after it has been dried to a particular dryness level, you can adjust the dryness level.

1. Set an automatic programme.
   → *"Automatic programmes", Page 26*
   ✔ The display shows the specified dryness level.
2. Press **Cupboard Dry Plus** , **Cupboard Dry** or **Iron Dry** .
   ✔ The display shows: "+1", "+2" or "+3".

9 Programmes

You can dry your fabrics using either an automatic programme or a timed programme.

9.1 Automatic programmes

Automatic programmes are programmes in which humidity sensors measure the residual moisture in the laundry during the drying cycle. The programme only ends once the set dryness level is reached.
Each automatic programme has a dryness level → *Page 25*. The dryness level defines how dry or damp the laundry is after the programme ends.

Tips

- Select the dryness level according to the type of fabric or the desired drying result.
  → *"Dryness level", Page 25*
- The laundry's care labels provide you with additional information about programme selection.

Programme	Description	Max. load (kg)
Cottons	Dry hard-wearing, heat-resistant fabrics made of cotton or linen.	9,0
Cottons Eco	Dry hard-wearing, heat-resistant fabrics made of cotton or linen. Energy-saving programme.	9,0
Easy-Care	Dry items made of synthetic materials or blended fabrics.	3.5
Mix	Dry items made of cotton and synthetics.	3.0
Duvet	Dry clothing, pillows, quilts or bedspreads filled with synthetic fibres. **Note:** Dry large items of laundry, blankets or pillows individually.	2.5
Delicates	Dry delicate items made of satin, synthetics or blended fabrics.	2.0
Hygiene Plus	Dry hard-wearing, heat-resistant fabrics made of cotton or linen. **Note:** Particularly suitable for strict hygiene requirements.	4.0
Sportswear	Dry self-drying sportswear made of performance fibres, microfibres and synthetics.	1.5

Programme	Description	Max. load (kg)
Shirts/Blouses	Suitable for shirts and blouses made of cotton, linen, synthetics or blended fabrics. **Note:** For optimal drying results, dry a maximum of 5 shirts or 5 blouses at the same time. Once the laundry is dry, iron it or hang it up. The residual moisture is then distributed evenly.	1.5
Super Quick 40'	Dry items made of synthetics and light cotton.	2.0
Towels	Dry hard-wearing, heat-resistant towels and dressing gowns made of cotton or linen.	6.0

9.2 Timed programmes

Timed programmes are programmes with a defined or adjustable programme duration. The programme ends once this time has elapsed, even if the laundry is still not dry, for example. Timed programmes are suitable for drying individual items of laundry or thin fabrics.

Tip: The laundry's care labels provide you with additional information about programme selection.

Timed program	Description	Max. load (kg)
5 Shirts	Reduce creasing and air-borne odours on shirts and blouses that have been worn once. → *"Crease-removal function", Page 33*	2 to 5 items of laundry
1 Shirt	Reduce creasing and air-borne odours on shirts and blouses that have been worn once. → *"Crease-removal function", Page 33*	One item of laundry
Time Program Warm	Dry all types of fabric except for wool and silk. Suitable for pre-dried or slightly damp laundry and for drying off multi-layered, thick laundry.	3.0

10 Accessories

Use original accessories. These have been made especially for your appliance.

Note: Some accessories are available in other colours. Contact
→ *"Customer Service", Page 51*.

	Use	Order number
Connection kit	To save space, stack the appliance on a suitable washing machine of the same width and depth and that is from the same manufacturer.	WTZ27410
Connection kit with pull-out worktop	To save space, stack the appliance on a suitable washing machine of the same width and depth and that is from the same manufacturer. The pull-out worktop makes it easier to load and unload the appliance.	WTZ27400
Y-distributor	Connect the water drain hose of an additional appliance to the same siphon outlet.	15000490
Appliance care product	Spare part for the intensive appliance care function.	00311829
Platform	Install the appliance at a raised height so that it can be easily loaded and unloaded.	WTZPW20D

11 Laundry

Note: You can find further information in the digital instruction manual by scanning the QR code in the table of contents or on www.bosch-home.com.

11.1 Preparing the laundry

ATTENTION!
Objects remaining in the laundry may damage the laundry and the drum.

- Remove all items from any pockets in your laundry before using the appliance.

- To protect your appliance and the laundry, prepare the laundry beforehand.
  - Empty any pockets
  - Brush sand out of all collars and pockets
  - Close bed covers and cushion covers
  - Close all zips, Velcro fasteners, hooks and eyes
  - Tie cloth belts, apron strings, etc. together or use a laundry bag.
  - Remove curtain hooks and lead strips or use a mesh laundry bag
  - Use a mesh laundry bag for small items of laundry, such as children's socks
  - Separate items of laundry and shake them out, or observe the programme description
  - Spin the laundry before drying

12 Basic operation

Note: You can find further information in the digital instruction manual by scanning the QR code in the table of contents or on www.bosch-home.com.

12.1 Switching on the appliance

Requirement: The appliance has been correctly installed and connected.
→ *"Installation and connection", Page 12*

- Turn the programme selector to a programme.

Note: The lighting for the drum goes out automatically.

12.2 Setting a programme

1. Turn the programme selector and set the required programme.
   → *"Programmes", Page 26*
2. If required, adjust the programme settings.

12.3 Loading laundry

Note: To prevent creasing, take note of the maximum load for the
→ *"Programmes", Page 26*.

Requirement: The laundry is prepared.
→ *"Laundry", Page 29*

1. Open the door.

   Make sure that the drum is empty.
2. Place the laundry in the drum.
3. Close the door.

   Ensure that there is no laundry trapped in the door.

12.4 Starting the programme

Note: If you want to change the time until the programme ends, set the "Ready in" time first.

- Press ▷II **Start/Reload**.
- ✔ The display shows either the programme duration or the "Ready in" time.
- ✔ After the programme has ended, the display shows: "End".

12.5 Adding laundry

After the programme starts, you can remove or add laundry at any time.

1. Press ▷II **Start/Reload**.
   The cooling process starts automatically after approx. 30 seconds and cools down the laundry while the drum is rotating. If you want to avoid or cancel the cooling process, open the door.
   → *"Display", Page 20*
2. Open the appliance door.
3. Add or remove laundry.
4. Close the appliance door.
5. Press ▷II **Start/Reload**.

12.6 Cancelling the programme

1. Press ▷II **Start/Reload**.
   The cooling process starts automatically after approx. 30 seconds and cools down the laundry while the drum is rotating. If you want to avoid or cancel the cooling process, open the door.
   → *"Display", Page 20*
2. Open the appliance door.
3. Remove the laundry → *Page 30*.

12.7 Unloading the laundry

1. Open the appliance door.
2. Remove the laundry.

12.8 Switching off the appliance

- Turn the programme selector to **Off**.

12.9 Fluff filter

During drying, fluff from the laundry is collected in the fluff filter. The fluff filter protects the appliance from fluff.

Cleaning the fluff filter

If the drying programme has finished or the display shows a notification while the appliance is in operation, clean the fluff filter.

Note: If you do not clean the appliance as described, the appliance's functionality may be impaired.

Requirements

- The display shows the following after drying: "End"
- or during operation: .

1. Open the door.
2. Remove the fluff from the door.

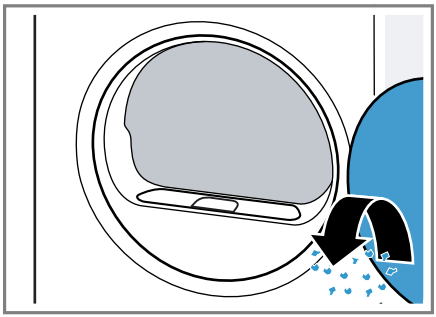

3. Remove the two-part fluff filter.

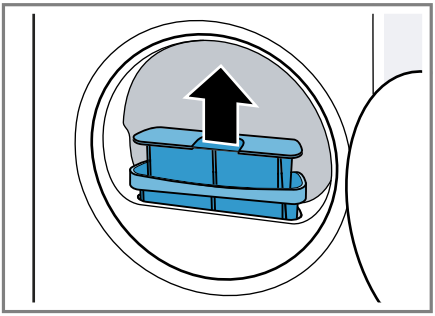

4. Remove the fluff from the recess.

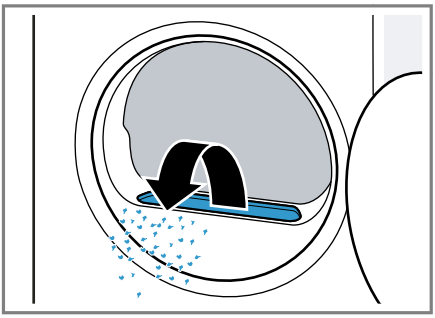

Ensure that no fluff falls into the air channel.

5. Disconnect the two-part fluff filter.

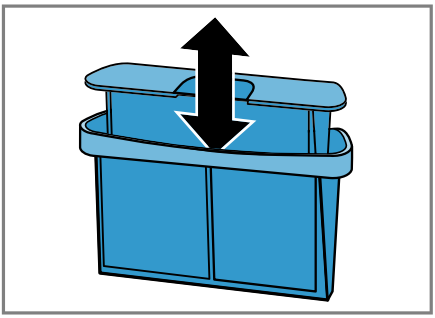

6. Open the two fluff filters.

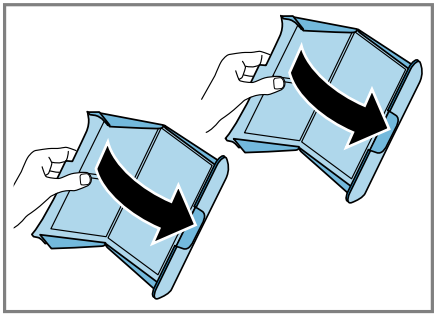

7. Remove the fluff.

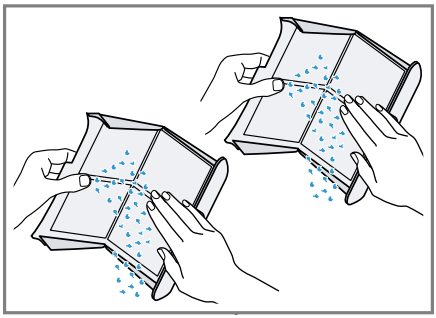

8. Clean the two fluff filters thoroughly under warm, running water and then dry them off.

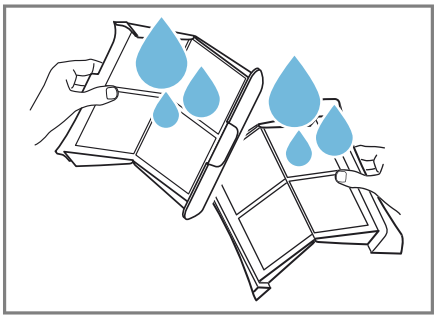

9. Close the two fluff filters and put them together.

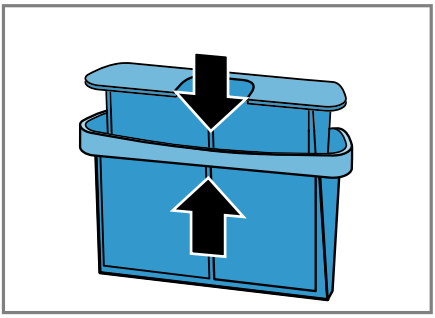

10. Insert the two-part fluff filter.

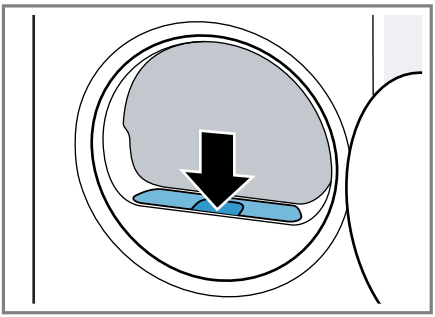

11. Close the door.

12.10 Condensation container

Condensation forms during drying, which your appliance uses for automatic cleaning. By default, the condensation is collected in the appliance's condensation container.

Note: Operate this appliance using the water drain hose provided. If you connect the water drain hose → *Page 14*, you do not have to regularly empty the condensation container → *Page 32*.

Emptying the condensation container

If the drying programme has finished or the display shows a notification while the appliance is in operation, empty the condensation container.

Requirements

- The display shows the following after drying: "End"
- or during operation: 💧.

1. Pull out the condensation container, keeping it level.

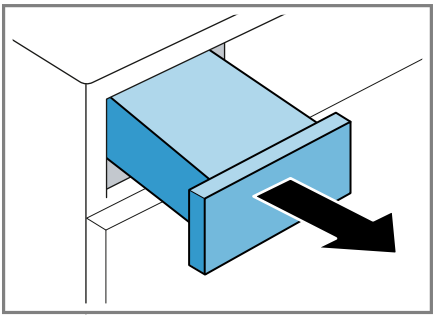

2. Empty the condensation container.

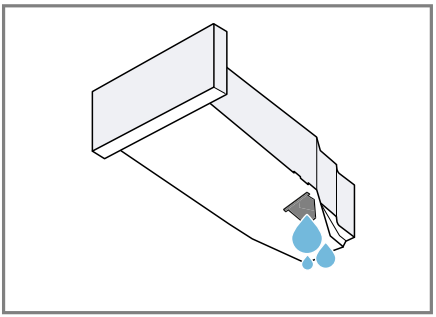

Check the condensation container filter → *Page 43* regularly and clean the filter if it is dirty.
Make sure that you insert the condensation container before operating the appliance.
→ *"Inserting the condensation container", Page 33*

Inserting the condensation container

Requirement: The condensation container → *Page 32* is removed from the appliance.

- Push the condensation container in as far as it will go.

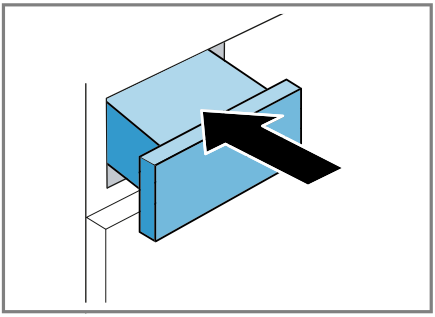

13 Childproof lock

Secure your appliance against being operated unintentionally using the controls.

13.1 Activating the childproof lock

- Press and hold the two **3 sec.** buttons for approx. 3 seconds.
- ✔ The display shows .
- ✔ The controls are locked.
- ✔ The childproof lock remains active even after the appliance has been switched off and in the event of a power failure.

13.2 Deactivating the childproof lock

Requirement: To deactivate the childproof lock, the appliance must be switched on.

- Press and hold the two **3 sec.** buttons for approx. 3 seconds.
- ✔ goes out in the display.

14 Crease-removal function

In order to reduce creasing and airborne odours, such as cigarette smoke, you can use a programme with a crease-removal function for any laundry that has not been worn for long.

14.1 Starting a programme with the crease-removal function

Note
Wash items of laundry that have traces of sweat, perfume or deodorant before wearing them again.
Do not use dryer cleaning sets.
Do not use a programme with the crease-removal function for the following fabrics:

- Wool, leather and viscose
- Fabrics with parts made from metal, wood or plastic
- Waxed jackets and oilskin jackets

Requirements

- The laundry is prepared.
  → *"Preparing the laundry", Page 29*
- The laundry is sorted.
- The laundry is inserted into the appliance.
  → *"Loading laundry", Page 29*

1. Set a programme with the crease-removal function.
   → *"Timed programmes", Page 27*
2. Start the programme → *Page 30*.
   If the water tank is empty, the display shows: .
   → *"Filling the water tank", Page 34*

The average programme duration of the crease-removal function is approx. 45 minutes and may be longer or shorter depending on the ambient temperature.

✔ After the programme has ended, the display shows: "End".

3. The
→ *"Unloading the laundry", Page 30*.

The results of the crease-removal function may vary depending on the type of fabric, the amount of laundry and the selected programme.
Remove the laundry immediately after the programme has ended to prevent creasing.

4. Hang up the items of laundry and pull them into shape.

14.2 Filling the water tank

Your appliance removes the creases from rarely worn clothing using cold drinking water. If the display shows a notification while the appliance is in operation, fill the water tank.

ATTENTION!
Operating the appliance with water that is dirty or too hot may result in damage to the appliance.

- Only fill the water tank with cold drinking water.
- Never use condensed water, distilled water, additives or descaler for the crease-removal function.

Requirements

- You have started a programme with the crease-removal function.
→ *"Starting a programme with the crease-removal function", Page 33*
- The display shows: 💧.
- The condensation container
→ *Page 32* is removed from the appliance.

1. Add approx. 180 ml cold drinking water through the front opening, using the water jug provided.

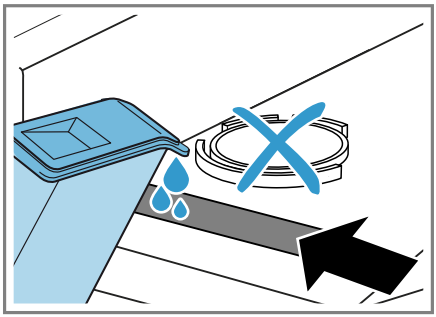

Check the water tank filter regularly and clean the filter if it is dirty.
→ *"Cleaning the water tank filter", Page 42*
If 💧 does not go out on the display, add cold drinking water through the front opening and align the appliance correctly.
→ *"Aligning the appliance", Page 16*

✔ 💧 goes out on the display.

2. Insert the condensation container
→ *Page 33*.
3. Start the programme.
→ *"Starting a programme with the crease-removal function", Page 33*

15 Basic settings

You can configure the basic settings for your appliance to meet your needs.

15.1 Overview of the basic settings

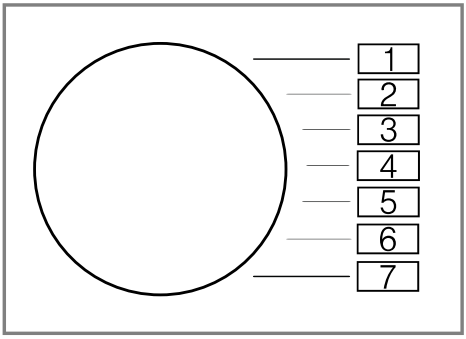

Basic setting	Programme position	Value	Description
End signal	2	0 (off) 1 (quiet) 2 (medium) 3 (loud) 4 (very loud)	Set the volume of the signal at the end of the programme.
Button signal	3	0 (off) 1 (quiet) 2 (medium) 3 (loud) 4 (very loud)	The volume of the audible signal emitted when the buttons are pressed.
Programme counter	5	42[1]	Display the number of started programmes.

[1] Example

15.2 Changing the basic settings

1. Set the programme selector to position 1.

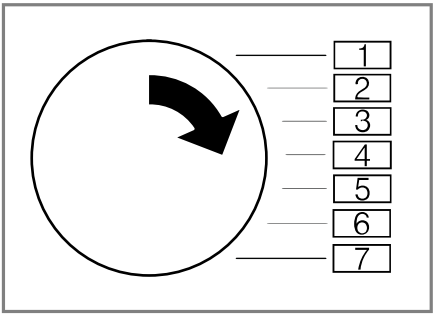

2. Press **Iron Dry** and, at the same time, turn the programme selector to position 2.
✔ The display shows the current value.
3. Set the programme selector to the required position.
→ *"Overview of the basic settings", Page 35*
4. To change the value, press **Finished in**.
5. To save the changes, switch off the appliance.

16 Appliance care

16.1 Preparing the appliance for the appliance care programme

The appliance must be prepared before basic or intensive appliance care is carried out.

Requirement: The fluff filter has been cleaned.
→ *"Cleaning the fluff filter", Page 30.*

1. Remove the laundry.

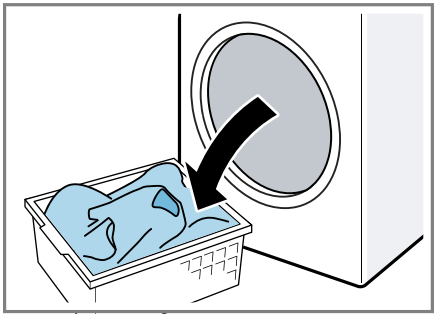

2. Close the appliance door.
3. Pull out the condensation container, keeping it level.

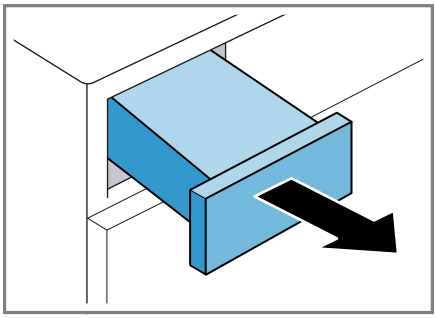

4. Empty the condensation container
→ *Page 32.*

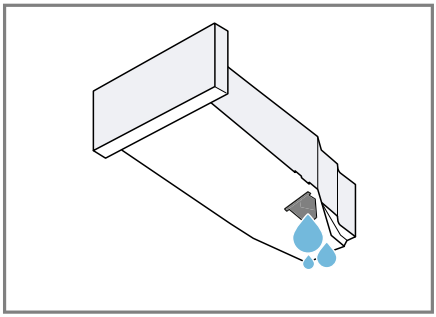

16.2 Preparing the condensation container for the appliance care programme

Note: If the condensation is drained using the drain hose, the condensation container must be prepared before the basic or intensive appliance care programme.
→ *"Water drain hose", Page 13*

1. Remove the stopper from the recess in the condensation container.

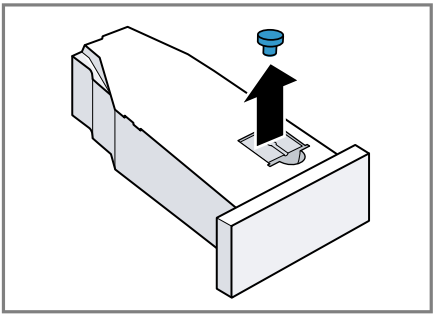

2. Insert the plug from below.

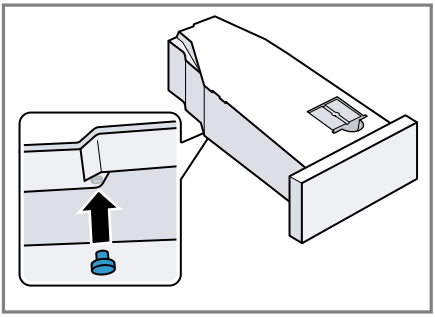

✔ The condensation container is ready for the appliance care programme.

Note: If the condensation is drained using the drain hose, perform the above-mentioned steps after the basic or intensive appliance care programme in the reverse order.

16.3 Starting the appliance care programme

Requirements

- The appliance is ready to run the appliance care programme.
  → *"Preparing the appliance for the appliance care programme ", Page 36*.
- The condensation container is ready for the appliance care programme.
  → *"Preparing the condensation container for the appliance care programme", Page 37*.

1. Set the programme to position 1.

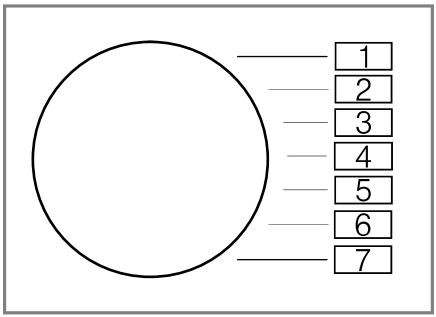

2. Press and hold **Iron Dry**.
3. Set the programme to position 4.
4. Release **Iron Dry**.

✔ "CP1" and the programme duration alternate on the display.

16.4 Running the basic appliance care programme on the appliance

To remove any light soiling, you can run a basic appliance care programme.

Note: After a certain period of use, the appliance automatically recommends that you run the basic appliance care programme. Before the start and end of the programme, the display shows the note "CrE" for 5

seconds. The note is shown repeatedly until the basic appliance care programme has been run completely.

Requirements

- The appliance is ready to run the appliance care programme.
  → *"Preparing the appliance for the appliance care programme ", Page 36*.
- The appliance care programme has started.
  → *"Starting the appliance care programme", Page 37*

1. Add approx. 1 ½ litres of hot tap water into the condensation container.

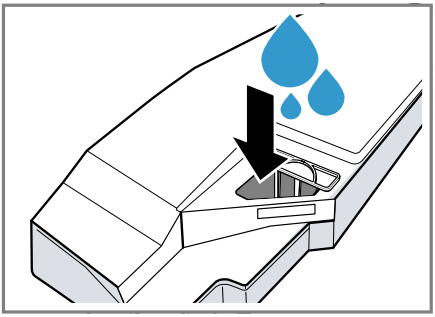

Hold the full condensation container level so that no liquid spills out.

2. Insert the condensation container so that it locks into place.

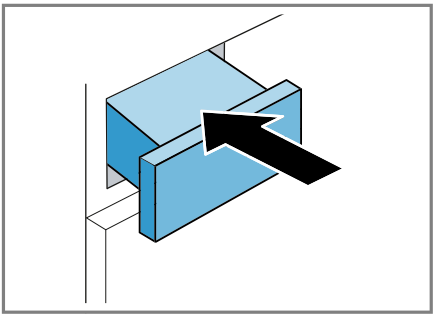

3. Press ▷II **Start/Reload**.

✔ The appliance care programme starts and an audible signal sounds.

✔ "End" appears on the display once the appliance care programme has ended and an audible signal sounds.

4. Pull out the condensation container, keeping it level.

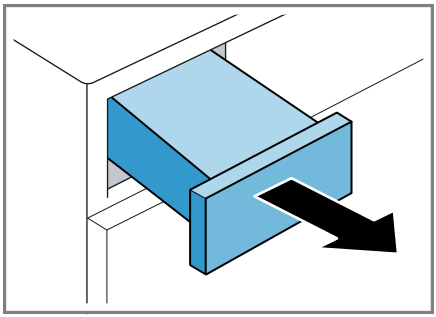

5. Empty the condensation container → *Page 32*.

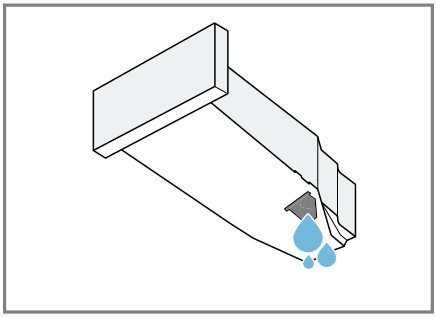

6. Insert the condensation container so that it locks into place.

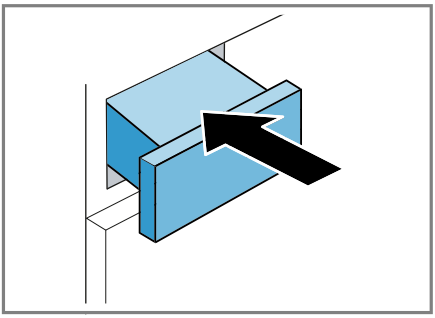

✔ The appliance care programme has been completed.

Note: If the condensate water has been drained from the machine via the drain hose, please follow the steps in
→ *"Preparing the condensation container for the appliance care programme", Page 37* in reverse order, after both the intensive and regular cleaning processes.

16.5 Preparing the appliance for the intensive appliance care programme

If the appliance is not used for more than one month, stubborn dirt or odours may occur. To remove this, you can run an intensive appliance care programme.

Note: The intensive appliance care programme runs for approximately 4 hours. The programme may take longer if you do not carry out the necessary steps in good time while the programme is running.
Once it has started, the intensive appliance care programme should not be cancelled.

Requirements

- The appliance is ready to run the appliance care programme.
→ *"Preparing the appliance for the appliance care programme ", Page 36*
- The appliance care programme has started.
→ *"Starting the appliance care programme", Page 37*

▸ Press **+**.

✔ "CP2" and the programme duration alternate on the display.

16.6 Running the intensive appliance care programme

1. Pull out the condensation container horizontally and empty it.

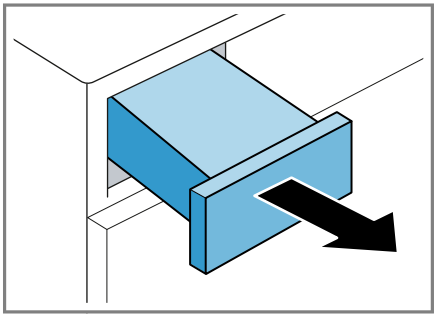

2. Pour a bottle of the original appliance care product
→ *"Accessories", Page 28* and approx. 1 ½ litres of warm tap water into the condensation container.

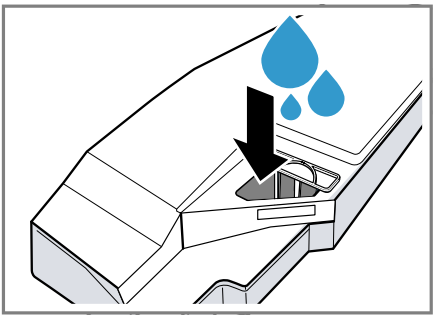

Hold the full condensation container level so that no liquid spills out.

3. Insert the condensation container so that it locks into place.

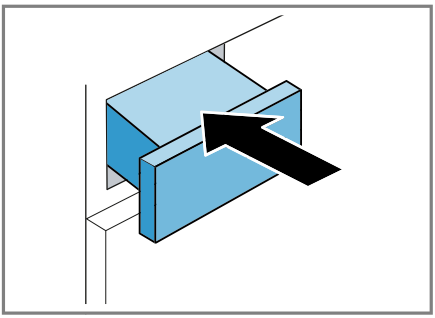

4. Press ▷II **Start/Reload**. The appliance care programme starts and an audible signal sounds.

   After around 3 hours, the appliance pauses the appliance care programme and the remaining programme duration flashes on the display.

5. Pull out the condensation container horizontally and empty it.

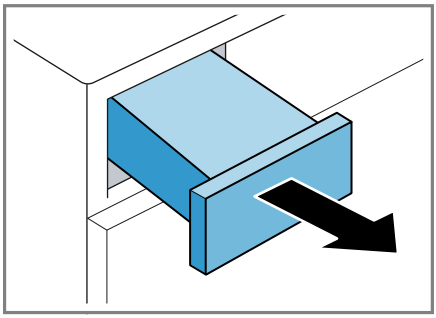

6. Add approx. 1 ½ litres of hot tap water into the condensation container.

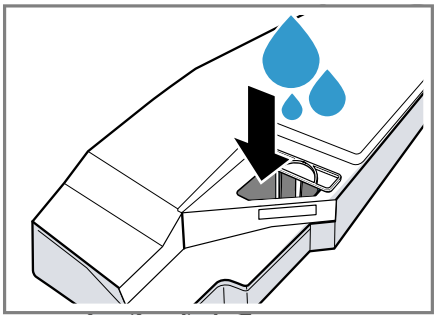

Hold the full condensation container level so that no liquid spills out.

7. Carefully tip and empty the condensation container horizontally in order to remove any remaining original care product.

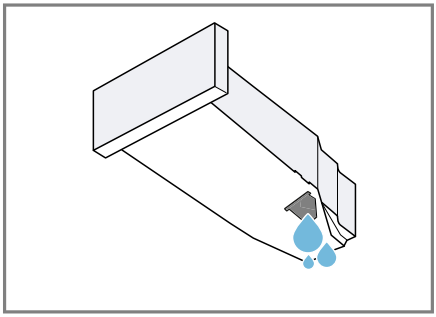

16.7 Ending the intensive appliance care programme

1. Add approx. 1 ½ litres of hot tap water into the condensation container.

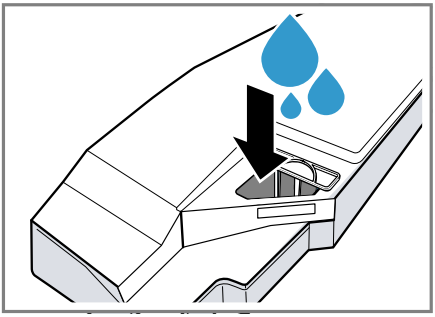

Hold the full condensation container level so that no liquid spills out.

2. Insert the condensation container so that it locks into place.

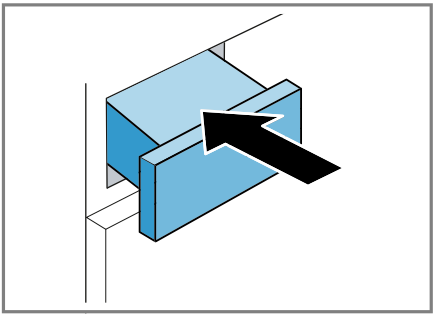

3. Press ▷II **Start/Reload**.

✔ The appliance care programme is resumed. "End" appears on the display and a signal tone sounds once the appliance care programme has ended.

4. Pull out the condensation container, keeping it level.

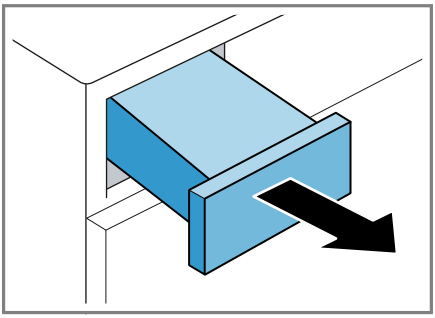

5. Empty the condensation container → *Page 32*.

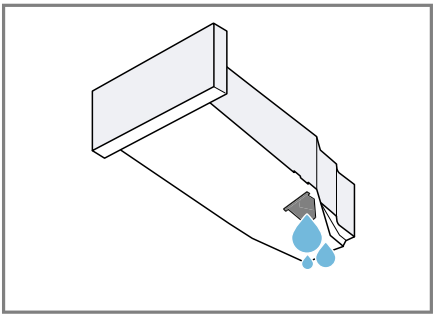

6. Insert the condensation container so that it locks into place.

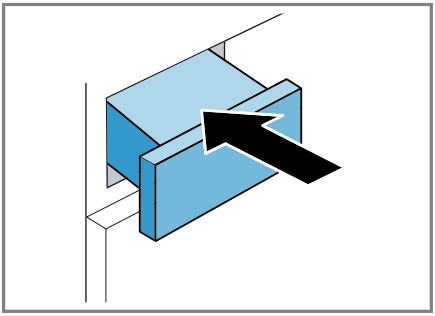

7. Switch off the appliance.
→ *"Switching off the appliance", Page 30*

✔ The appliance care programme has been completed.

Note: If the condensate water has been drained from the machine via the drain hose, please follow the steps in
→ *"Preparing the condensation container for the appliance care programme", Page 37* in reverse order, after both the intensive and regular cleaning processes.

17 Cleaning and servicing

To keep your appliance working efficiently for a long time, it is important to clean and maintain it carefully.

Note: You can find further information in the digital instruction manual by scanning the QR code in the table of contents or on www.bosch-home.com.

17.1 Tips on cleaning and care

Wipe down the housing and the controls with nothing but water and a damp cloth.	This ensures the parts of the appliance will remain clean and hygienic.
Remove all detergent residue, spray residue or other residues immediately.	Fresh deposits are easier to remove without leaving any residue.
Leave the appliance door open after use.	This allows the residual water to dry, reducing odours in the appliance.

17.2 Water tank filter

The filter in the water tank protects the appliance from dirt and contaminants.

Cleaning the water tank filter

Check the filter regularly and clean the filter if it is dirty.

Requirement: The condensation container → *Page 32* is removed from the appliance.

1. Pull out the filter.

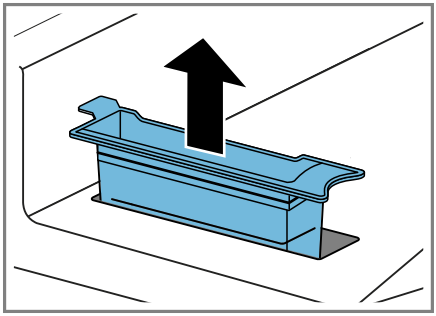

2. Clean the filter under warm, running water or in the dishwasher.
3. Fit the filter.

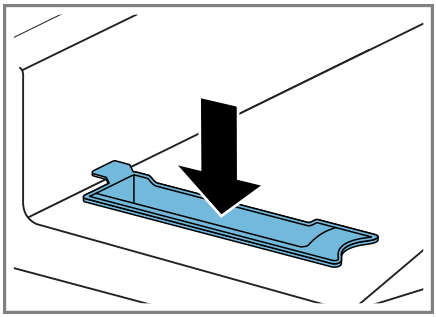

4. Insert the condensation container → *Page 33*.

17.3 Moisture sensor

The moisture sensor in this appliance measures how damp the laundry is during the drying cycle. The appli-

ance changes the duration of the automatic programme depending on the residual moisture in the laundry.

Cleaning the moisture sensor

Over time, residue from limescale, detergents and care products can build up on the moisture sensor. Clean the moisture sensor regularly.

ATTENTION!
Hard or rough objects may damage the moisture sensor.

- Do not use hard or rough objects, abrasive cleaning products or steel wool for cleaning.

Note: If you do not clean the appliance as described, the appliance's functionality may be impaired.

1. Open the door.
2. Clean the moisture sensor with a sponge.

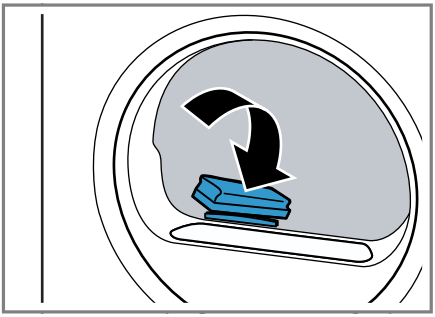

17.4 Condensation container filter

During drying, fluff from the laundry gets into the condensation. The filter in the condensation container protects the appliance from fluff.

Clean the filter for the condensation tank.

The filter is cleaned automatically when the condensation container is emptied. Check the filter regularly and clean the filter if it is dirty.

1. Empty the condensation container → *Page 32*.

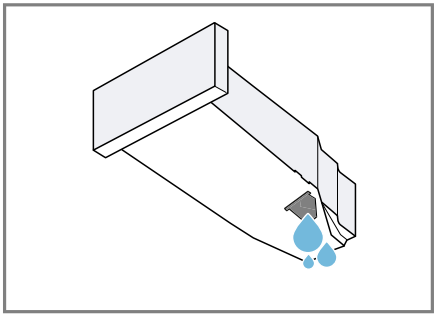

2. Remove the filter.

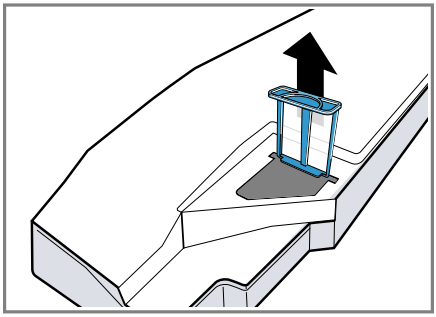

3. Clean the filter under warm, running water or in the dishwasher.

4. Slide in the filter as far as it will go.

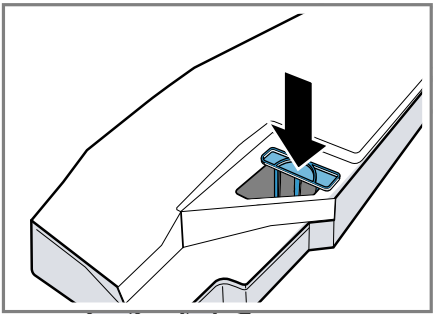

5. Insert the condensation container → *Page 33*.

18 Troubleshooting

You can rectify minor faults on your appliance yourself. Read the troubleshooting information before contacting after-sales service. This will avoid unnecessary costs.

⚠ **WARNING**
Risk of electric shock!
Incorrect repairs are dangerous.
- Repairs to the appliance should only be carried out by trained specialist staff.
- Only use genuine spare parts when repairing the appliance.
- If the power cord of this appliance is damaged, it must be replaced by the manufacturer, the manufacturer's Customer Service or a similarly qualified person in order to prevent any risk.

Fault	Cause and troubleshooting
"Hot" and the drum rotates.	Cooling process active. 1. Not a fault. 2. Do not change the programme during the cooling process. **Note:** The cooling process takes up to 10 minutes. You can continue to operate the appliance.
Humming noise.	Compressor active. ▸ Not a fault – normal operating noise.
The display goes out and ▷II **Start/Reload** flashes.	Energy-saving mode is active ▸ Press any button. ✔ The symbol lights up again.
"CrE"	After a period of operation, the appliance automatically recommends that you run the basic appliance care programme. ▸ → *"Running the basic appliance care programme on the appliance", Page 37*
The crease-removal function takes too long.	A low ambient temperature extends the duration of the crease-removal function. ▸ Not a fault – no action required.
	Fluff filter is soiled. ▸ → *"Cleaning the fluff filter", Page 30*
The appliance is not working.	The mains plug of the power cord is not plugged in. ▸ Connect the appliance to the power supply.
	The circuit breaker in the fuse box has tripped. ▸ Check the circuit breaker in the fuse box.

Fault	Cause and troubleshooting
The appliance is not working.	There has been a power cut. ▸ Check whether the lighting in your kitchen or other appliances are working.
Appliance paused, but the drum is rotating.	Cooling process active. ▸ Not a fault – no action required.
Creasing.	The load is too large. ▸ Observe the maximum load capacity of the → *"Programmes", Page 26*.
	The laundry lies in the drum for too long after drying. **1.** Remove the laundry from the drum as soon as the drying programme has finished. **2.** Spread the items of laundry for cooling.
	Unsuitable programme for the type of fabric. ▸ Set the suitable programme for the type of fabric. → *"Programmes", Page 26*
	Easy-Care fabrics are dried for too long. ▸ → *"Changing the dryness level", Page 25*. ▸ → *"Adjusting the dryness level", Page 25*.
	Anti-Crease not activated. ▸ Activate the Anti-Crease function. → *"Buttons", Page 23*
and programme terminated.	Condensation tank filled. **1.** → *"Emptying the condensation container", Page 32*. **2.** → *"Inserting the condensation container", Page 33*. **3.** → *"Starting the programme", Page 30*.
	Water drain hose is caught or jammed. **1.** Ensure that the water drain hose is not kinked or trapped. **2.** Route the water drain hose without kinks.
	Water drain hose is not connected correctly. ▸ Ensure that the water drain hose is connected correctly. → *"Connecting the water drain hose", Page 14*
	Water drain hose is blocked. ▸ Rinse the water drain hose with tap water.
	The filter for the condensation tank is soiled. ▸ → *"Clean the filter for the condensation tank.", Page 43*.

Fault	Cause and troubleshooting
Condensation in the condensation tank even though the water drain hose is connected.	The appliance uses condensation for the automatic self-cleaning. ▸ Not a fault – no action required.
	Water drain hose is not connected correctly. ▸ Ensure that the water drain hose is connected correctly. → *"Connecting the water drain hose", Page 14*
The programme does not start.	Childproof lock is activated. ▸ → *"Deactivating the childproof lock", Page 33*
	You have not pressed ▷II **Start/Reload**. ▸ Press ▷II **Start/Reload**.
	No programme set. 1. → *"Setting a programme", Page 29*. 2. → *"Starting the programme", Page 30*.
The length of the programme changes during the drying cycle.	The programme operation is optimised electronically. This may change the programme duration. ▸ Not a fault – no action required.
Pumping noise.	Condensation pump active. ▸ Not a fault – normal operating noise.
Buzzing noise.	Compressor ventilation active. ▸ Not a fault – normal operating noise.
The drying time is too long.	Fluff filter is soiled. ▸ → *"Cleaning the fluff filter", Page 30*
	The ambient temperature is greater than 30 °C. ▸ Ensure that the ambient temperature is lower than 30 °C.
	The ambient temperature is lower than 15 °C. ▸ Ensure that the ambient temperature is above 15 °C.
	Insufficient air circulation at the appliance's installation location. ▸ Ventilate the appliance's installation location.
	Insufficient condensation for the automatic self-cleaning when permanently using the crease-removal function.
	Appliance air inlet is blocked. ▸ Ensure that the air inlet on the appliance is kept clear.
	Heat exchanger is soiled.

Fault	Cause and troubleshooting
The drying time is too long.	▸ → *"Running the basic appliance care programme on the appliance", Page 37*
	Automatic self-cleaning function rinses the appliance's heat exchanger. **1.** Not a fault. **2.** Do not pull out the condensation tank. **3.** Do not cancel the programme.
Water is leaking from the appliance.	Appliance is not correctly aligned. ▸ → *"Aligning the appliance", Page 16*
	Water drain hose is not connected correctly. ▸ Ensure that the water drain hose is connected correctly. → *"Connecting the water drain hose", Page 14*
	The water tank for the crease-removal function is empty. ▸ → *"Filling the water tank", Page 34*.
Water overflows when filling the water tank.	The water tank has been filled. **Note:** The overflowing water is harmless. ▸ Do not pour any more water into the water tank.
	The water tank filter is soiled. ▸ → *"Cleaning the water tank filter", Page 42*.
The laundry is too damp.	Unsuitable programme for the type of fabric. ▸ Set a timed programme for the subsequent drying. → *"Programmes", Page 26*
	There has been a power cut. ▸ Check whether the lighting in your kitchen or other appliances are working.
	The load is too large. ▸ Observe the maximum load capacity of the → *"Programmes", Page 26*.
	After the end of the programme, warm laundry feels damper than it actually is. **1.** Remove the laundry from the drum as soon as the drying programme has finished. **2.** Spread the items of laundry for cooling.
	Unsuitable dryness level set. ▸ → *"Changing the dryness level", Page 25*.
	Drying target not adjusted. ▸ → *"Adjusting the dryness level", Page 25*.

Fault	Cause and troubleshooting
The laundry is too damp.	Load too small. ▸ Set a timed programme for the subsequent drying. → *"Programmes", Page 26*
	Moisture sensor dirty. ▸ → *"Cleaning the moisture sensor", Page 43*.
	The drying process is interrupted and the condensation tank has been filled. **1.** → *"Emptying the condensation container", Page 32*. **2.** → *"Inserting the condensation container", Page 33*. **3.** → *"Starting the programme", Page 30*.
Odours have formed in the appliance.	Stubborn dirt in the appliance or an extended appliance downtime of more than one month. ▸ → *"Preparing the appliance for the intensive appliance care programme", Page 39*.

19 Transportation, storage and disposal

You can find out here how to prepare your appliance for transportation and storage. You will also find out how to dispose of old appliances.

19.1 Preparing the appliance for transportation

ATTENTION!
If the appliance is operated immediately after transportation, the refrigerant contained in the appliance may result in damage to the appliance.
- Immediately after transporting the appliance, leave it to rest for two hours before putting it into operation.

Tip: The appliance may contain residual water, which may drip out of it when transported. The appliance should be transported upright.

Requirements
- The condensation container is emptied. Emptying the condensation container → *Page 32*
- The appliance has been switched on.
  → *"Switching on the appliance", Page 29*

1. Set any programme → *Page 29*.
2. Start the programme → *Page 30* and wait 5 minutes.
   ✔ The condensation is drained.
3. Switch off the appliance.
   → *"Switching off the appliance", Page 30*
4. Remove the water drain hose from the connection point.
   → *"Water outlet connection types", Page 15*
5. Secure the water drain hose on the appliance against unintentional loosening.

   Ensure that you do not bend the water drain hose.
6. Empty the condensation container → *Page 32*.
7. Insert the condensation container → *Page 33*.
8. Disconnect the appliance's mains plug from the power supply.

✔ The appliance is now ready to be transported.

19.2 Disposing of old appliance

Valuable raw materials can be reused by recycling.

⚠ **WARNING**
Risk of harm to health!
Children can lock themselves in the appliance, thereby putting their lives at risk.
- Do not install the appliance behind a door as this may obstruct the appliance door or prevent it from opening.
- With redundant appliances, unplug the power cord. Then cut through the cord and damage the lock on the appliance door beyond repair so that the appliance door will no longer close.

⚠ **WARNING**
Risk of fire!
The refrigerant R290 used in this appliance is environmentally friendly. It is however flammable and may ignite if appliances are not disposed of properly.
- Dispose of the appliance properly.
- Do not damage the tubing of the refrigerant circuit.

1. Unplug the appliance from the mains.
2. Cut through the power cord.
3. Dispose of the appliance in an environmentally friendly manner.

   Information about current disposal methods are available from your specialist dealer or local authority.

This appliance is labelled in accordance with European Directive 2012/19/EU concerning used electrical and electronic appliances (waste electrical and electronic equipment - WEEE). The guideline determines the framework for the return and recycling of used appliances as applicable throughout the EU.

20 Customer Service

If you have any queries on use, are unable to rectify faults on the appliance yourself or if your appliance needs to be repaired, contact Customer Service.
Function-relevant genuine spare parts according to the corresponding Ecodesign Order can be obtained from Customer Service for a period of at least 10 years from the date on which your appliance was placed on the market within the European Economic Area.

Note: Under the terms of the manufacturer's warranty the use of Customer Service is free of charge.

Detailed information on the warranty period and terms of warranty in your country is available from our after-sales service, your retailer or on our website.
If you contact Customer Service, you will require the product number (E-Nr.) and the production number (FD) of your appliance.
The contact details for Customer Service can be found in the enclosed Customer Service directory or on our website.

20.1 Product number (E-Nr.) and production number (FD)

You can find the product number (E-Nr.) and the production number (FD) on the appliance's rating plate.
Depending on the model, the rating plate is located:

- On the inside of the door.
- On the inside of the maintenance flap.
- On the rear of the appliance.

Make a note of your appliance's details and the Customer Service telephone number to find them again quickly.

21 Consumption values

The ⊂ **Cottons Eco** ⓔ programme (denoted by the arrow symbol) is suitable for drying cotton laundry with a normal dampness level, and is the most efficient programme for drying damp cotton laundry in terms of combined energy consumption.
The consumption values for this programme that are declared on the energy label refer to a moisture content of the laundry of 60%.
The values specified for other programmes are indicative only and were determined in accordance with the applicable standard EN61121.

The actual values may deviate from the indicated values depending on the type of fabric, composition of laundry to be dried, residual moisture in the fabric, set degree of dryness, amount of laundry being loaded, environmental conditions and the activation of additional functions.
The expected programme duration/"Ready in" time that is shown on the appliance display when selecting the programme is based on the spin speed in the washing machine of 1000 rpm when the appliance is delivered.

Programme	Final moisture level (%)	Load (kg)	Spin speed (rpm)	Initial moisture level (%)	Programme duration (h:min)	Energy consumption (kWh/cycle)
Cottons + Cupboard Dry	-1,5	9,0	1400	50	2:59	2,07
Cottons + Cupboard Dry	-1,5	4,5	1400	50	2:16	1,42
Cottons + Cupboard Dry	-1,5	9,0	1000	60	3:19	2,36
Cottons + Cupboard Dry	-1,5	4,5	1000	60	2:27	1,58
Cottons + Cupboard Dry	-1,5	9,0	800	70	3:39	2,65
Cottons + Cupboard Dry	-1,5	4,5	800	70	2:38	1,74
⊂ Cottons Eco ⓔ	0,0	9,0	1400	50	2:38	1,77
⊂ Cottons Eco ⓔ	0,0	4,5	1400	50	1:51	1,09
⊂ Cottons Eco ⓔ	0,0	9,0	1000	60	2:56	2,05
⊂ Cottons Eco ⓔ	0,0	4,5	1000	60	2:01	1,25
⊂ Cottons Eco ⓔ	0,0	9,0	800	70	3:14	2,34
⊂ Cottons Eco ⓔ	0,0	4,5	800	70	2:12	1,41

Programme	Final moisture level (%)	Load (kg)	Spin speed (rpm)	Initial moisture level (%)	Programme duration (h:min)	Energy consumption (kWh/cycle)
Cottons + Iron Dry	12,0	9,0	1400	50	1:47	1,19
Cottons + Iron Dry	12,0	4,5	1400	50	1:12	0,70
Cottons + Iron Dry	12,0	9,0	1000	60	2:07	1,49
Cottons + Iron Dry	12,0	4,5	1000	60	1:23	0,87
Cottons + Iron Dry	12,0	9,0	800	70	2:28	1,79
Cottons + Iron Dry	12,0	4,5	800	70	1:34	1,03
Easy-Care + Cupboard Dry	2,0	3,5	800	40	1:00	0,55
Easy-Care + Cupboard Dry	2,0	3,5	600	50	1:09	0,67

22 Technical data

Appliance height	84,2 cm
Appliance width	59,8 cm
Appliance depth	61,3 cm
Appliance depth with door closed	64,8 cm
Appliance depth with door open	109.6 cm
Weight	56,4 kg
Maximum load	9,0 kg
Mains voltage	220-240 V, 50 Hz
Minimum installation protection	10A
Nominal power	800 W
Power consumption	■ Off mode: 0,15 W ■ Left-on mode: 0,50 W
Ambient temperature	■ Minimum: 5 °C ■ Maximum: 35 °C
Length of the power cord	145 cm

This product contains light sources from energy efficiency class F. These light sources are available as a spare part and must only be replaced by trained specialist staff.

You can find more information about your model online at https://eprel.ec.europa.eu/[1]. This web address is linked to the official EU EPREL product database. Please then follow the instructions on searching for the model. The model identifier is made up of the characters before the slash in the product number (E-Nr.) on the rating plate. Alternatively, you can also find the model identifier in the first line of the EU energy label.

[1] Only applies to countries in the European Economic Area

Thank you for buying a Bosch Home Appliance!

Register your new device on MyBosch now and profit directly from:

- **Expert tips & tricks for your appliance**
- **Warranty extension options**
- **Discounts for accessories & spare-parts**
- **Digital manual and all appliance data at hand**
- **Easy access to Bosch Home Appliances Service**

Free and easy registration – also on mobile phones:
www.bosch-home.com/welcome

Looking for help? You'll find it here.

Expert advice for your Bosch home appliances, help with problems or a repair from Bosch experts.
Find out everything about the many ways Bosch can support you:
www.bosch-home.com/service
Contact data of all countries are listed in the attached service directory.

BSH Hausgeräte GmbH
Carl-Wery-Straße 34
81739 München, GERMANY
www.bosch-home.com

A Bosch Company

9001734814 (020401)
en

Valid within Great Britain:
Imported to Great Britain by
BSH Home Appliances Ltd.
Grand Union House
Old Wolverton Road
Wolverton, Milton Keynes
MK12 5PT
United Kingdom