BOSCH

Register your new device on MyBosch now and get free benefits:
bosch-home.com/welcome

MyBosch

Induction hob

PXX9..K...

[en] Information for Use

Futher information and explanations are available online:

Table of contents

1 **Safety** ... 2
2 **Avoiding material damage** ... 4
3 **Environmental protection and saving energy** ... 5
4 **Suitable cookware** ... 5
5 **Familiarising yourself with your appliance** ... 7
6 **Before using for the first time** ... 9
7 **Basic operation** ... 9
8 **FlexInduction** ... 11
9 **MoveMode** ... 12
10 **Time-setting options** ... 13
11 **PowerBoost** ... 13
12 **PanBoost** ... 14
13 **Keep-warm function** ... 14
14 **Transfer settings** ... 14
15 **Assist** ... 15
16 **Wireless cooking sensor** ... 18
17 **Meal assistant** ... 20
18 **Childproof lock** ... 21
19 **Wipe protection** ... 21
20 **Individual safety switch-off** ... 21
21 **Basic settings** ... 21
22 **Cookware test** ... 22
23 **Home Connect** ... 22
24 **Hob-based hood control** ... 24
25 **Cleaning and servicing** ... 25
26 **Troubleshooting** ... 26
27 **Disposal** ... 27
28 **Declaration of Conformity** ... 28
29 **Customer Service** ... 28
30 **Test dishes** ... 28

⚠ 1 Safety

Observe the following safety instructions.

1.1 General information

- Read this instruction manual carefully.
- Keep the instructions, the appliance pass and the product information safe for future reference or for the next owner.
- Do not connect the appliance if it has been damaged in transit.

1.2 Intended use

Only a licensed professional may connect appliances without plugs. Damage caused by incorrect connection is not covered under the warranty.
The appliance can only be used safely if it is correctly installed according to the safety instructions. The installer is responsible for ensuring that the appliance works perfectly at its installation location.
Only use this appliance:

- To prepare meals and drinks.
- Under supervision. Never leave the appliance unattended when cooking for short periods.
- In private households and in enclosed spaces in a domestic environment.
- Up to an altitude of max. 4000 m above sea level.

Do not use the appliance:

- With an external timer or a separate remote control. This does not apply if operation with appliances included in EN 50615 is switched off.

When using the cooking functions, set the hotplate on which you have placed the saucepan with the temperature sensor.
If you wear an active implantable medical device (e.g. a pacemaker or defibrillator), check with your doctor that it complies with Council Directive 90/385/EEC of 20th June 1990, EN 45502-2-1 and EN 45502-2-2, and that it has been chosen, implanted and programmed in accordance with VDE-AR-E

2750-10. If these conditions are satisfied, and if, in addition, non-metal cooking utensils and cookware with non-metal handles are used, it is safe to use this induction hob as intended.
If these conditions are satisfied, and if, in addition, non-metal cooking utensils and cookware with non-metal handles are used, it is safe to use this induction hob as intended.

1.3 Restriction on user group

This appliance may be used by children aged 8 or over and by people who have reduced physical, sensory or mental abilities or inadequate experience and/or knowledge, provided that they are supervised or have been instructed on how to use the appliance safely and have understood the resulting dangers.
Do not let children play with the appliance.
Children must not perform cleaning or user maintenance unless they are at least 15 years old and are being supervised.
Keep children under the age of 8 years away from the appliance and power cable.

1.4 Safe use

⚠ WARNING – Risk of fire!

Leaving fat or oil cooking on an unattended hob can be dangerous and may lead to fires.
- ▸ Never leave hot oil or fat unattended.
- ▸ Never attempt to extinguish a fire using water; instead, switch off the appliance and then cover with a lid or a fire blanket.

The cooking surface becomes very hot.
- ▸ Never place flammable objects on the cooking surface or in its immediate vicinity.
- ▸ Never place objects on the cooking surface.

The appliance will become hot.
- ▸ Do not keep combustible objects or aerosol cans in drawers directly underneath the hob.

Hob covers can cause accidents, for example due to overheating, catching fire or materials shattering.
- ▸ Do not use hob covers.

After every use, switch off the hob using the main switch.
- ▸ Do not wait until the hob turns off automatically as there are no longer any pots and pans on it.

Food may catch fire.
- ▸ The cooking process must be monitored. A short process must be monitored continuously.

⚠ WARNING – Risk of burns!

The appliance and its parts that can be touched become hot during use, particularly the hob surround, if fitted.
- ▸ Caution should be exercised here in order to avoid touching heating elements.
- ▸ Young children under 8 years of age must be kept away from the appliance.

Hob protective grilles may cause accidents.
- ▸ Never use hob protective grilles.

The appliance becomes hot during operation.
- ▸ Allow the appliance to cool down before cleaning.

Metal objects on the hob quickly become very hot.
- ▸ Never place metal objects (such as knives, forks, spoons and lids) on the hob.

⚠ WARNING – Risk of electric shock!

Incorrect repairs are dangerous.
- ▸ Repairs to the appliance should only be carried out by trained specialist staff.
- ▸ Only use genuine spare parts when repairing the appliance.
- ▸ If the power cord of this appliance is damaged, it must be replaced with a special connection cable, which is available from the manufacturer or his Customer Service.

If the appliance or the power cord is damaged, this is dangerous.
- ▸ Never operate a damaged appliance.
- ▸ If the surface is cracked, you must switch off the appliance in order to prevent a possible electrical shock. To do this, switch off the appliance via the fuse in the fuse box rather than at the main switch.
- ▸ Never pull on the power cord to unplug the appliance. Always unplug the appliance at the mains.
- ▸ If the appliance or the power cable is damaged, immediately switch off the fuse in the fuse box.
- ▸ Call customer services. → *Page 28*

An ingress of moisture can cause an electric shock.
- ▸ Do not use steam- or high-pressure cleaners to clean the appliance.

The insulation on cables of electrical appliances may melt if it touches hot parts of the appliance.

- Never bring electrical appliance cables into contact with hot parts of the appliance.

If metallic objects come into contact with the fan that is located on the underside of the hob, this may cause an electric shock.

- Do not store long, pointed metallic objects in the drawers below the hob.

⚠ WARNING – Risk of injury!

Saucepans may suddenly jump due to liquid between the saucepan base and the hotplate.

- Always keep hotplates and saucepan bases dry.
- Never use icy-cold cookware that has been in the freezer.

The wireless temperature sensor is equipped with a battery, which may become damaged if it is exposed to high temperatures.

- Remove the sensor from the cookware and store it away from any heat sources.

The temperature sensor may be very hot when removing it from the saucepan.

- Wear oven gloves or use a tea towel to remove it.

When cooking in a bain marie, the hob and cooking container could shatter due to overheating.

- The cooking container in the bain marie must not directly touch the bottom of the water-filled pot.
- Only use heat-resistant cookware.

An appliance with a cracked or broken surface can cause cuts.

- Do not use the appliance if it has a cracked or broken surface.

⚠ WARNING – Danger: Magnetism!

The wireless temperature sensor is magnetic and can damage electronic implants, e.g. heart pacemakers or insulin pumps.

- Persons with electronic implants must stand at least 10 cm away from the magnetic control element.
- Never put the control element in your pockets.

⚠ WARNING – Risk of suffocation!

Children may put packaging material over their heads or wrap themselves up in it and suffocate.

- Keep packaging material away from children.
- Do not let children play with packaging material.

Children may breathe in or swallow small parts, causing them to suffocate.

- Keep small parts away from children.
- Do not let children play with small parts.

2 Avoiding material damage

This is where you can find the most common causes of damage and tips on how to avoid them.

Damage	Cause	Action
Stains	Unsupervised cooking process.	Monitor the cooking process.
Stains, blisters	Spilled food, especially food with a high sugar content.	Remove immediately with a glass scraper.
Stains, blisters or fractures in the glass	Defective cookware, cookware with melted enamel or cookware with copper or aluminium base.	Use suitable cookware that is in a good condition.
Stains, discolouration	Unsuitable cleaning methods.	Only use cleaning agents that are suitable for glass ceramic, and only clean the hob when it is cold.
Blisters or fractures in the glass	Knocks or falling cookware, cooking accessories or other hard or pointed objects.	When cooking, do not hit the glass or let objects fall onto the hob.
Scratches, discolouration	Rough cookware bases or moving the cookware on the hob.	Check the cookware. Lift the cookware when moving it.
Scratches	Salt, sugar or sand.	Do not use the hob as a work surface or storage space.

Damage	Cause	Action
Damage to the appliance	Cooking with frozen cookware.	Never use frozen cookware.
Damage to the cookware or the appliance	Cooking without contents.	Never place or heat empty cookware on a hot cooking zone.
Glass damage	Melted material on the hot cooking zone or hot pot lid on the glass.	Do not place greaseproof paper or aluminium foil nor plastic containers or pot lids on the hob.
Overheating	Hot cookware on the control panel or on the frame.	Never place hot cookware on these areas.

ATTENTION!
A fan is located on the underside of this hob.
- ▸ If a drawer is located on the underside of the hob, do not store any small or pointed objects, paper or tea towels in it. These objects may be sucked in and damage the fan or impair the cooling.
- ▸ There must be a clearance of at least 2 cm between the contents of the drawer and the fan entry point.

3 Environmental protection and saving energy

3.1 Disposing of packaging

The packaging materials are environmentally compatible and can be recycled.
- ▸ Sort the individual components by type and dispose of them separately.

3.2 Saving energy

If you follow these instructions, your appliance will use less energy.

Select the cooking zone to match the size of your pan. Centre the cookware on the hob.
Use cookware whose base diameter is the same diameter as the hotplate.

Tip: Cookware manufacturers often give the upper diameter of the saucepan. It is often larger than the base diameter.
- ■ Unsuitable cookware or incompletely covered cooking zones consume a lot of energy.

Cover saucepans with suitable lids.
- ■ Cooking without a lid consumes considerably more energy.

Lift lids as infrequently as possible.
- ■ When you lift the lid, a lot of energy escapes.

Use a glass lid.
- ■ You can see into the pan through a glass lid without having to lift it.

Use pots and pans with flat bases.
- ■ Uneven bases increase energy consumption.

Use cookware that is suitable for the quantity of food.
- ■ Large items of cookware containing little food need more energy to heat up.

Cook with only a little water.
- ■ The more water that is contained in the cookware, the more energy is required to heat it up.

Turn down to a lower power level early on.
- ■ If you use an ongoing power level that is too high, you will waste energy.

Product Information according (EU) 66/2014 can be found on the attached appliance pass and online on the product page for your appliance.

4 Suitable cookware

Cookware that is suitable for induction cooking must have a ferromagnetic base, i.e. it must be attracted by a magnet. The base must also match the size of the

cooking zone. If cookware is not detected on a cooking zone, place this on the cooking zone with the next smallest diameter.

4.1 Size and characteristics of the cookware

To correctly detect the cookware, take the size and the material of the cookware into consideration. All cookware bases must be perfectly flat and smooth.
You can use Cookware test to check whether your cookware is suitable. You can find more information about this under
→ *"Cookware test", Page 22*.

Cookware	Materials	Properties
Recommended cookware 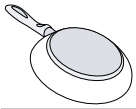	Stainless steel cookware in a sandwich design that distributes the heat well.	This cookware distributes the heat evenly, heats up quickly, and ensures that it can be detected easily.
	Ferromagnetic cookware made of enamelled steel, cast iron or special induction cookware made of stainless steel.	This cookware heats up quickly and ensures that it can be detected easily.
Suitable 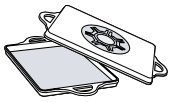 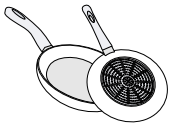	The base is not fully ferromagnetic.	If the ferromagnetic area is smaller than the base of the cookware, only the area that is ferromagnetic heats up. As a result, the heat is not distributed evenly.
	Cookware bases with aluminium content.	These reduce the ferromagnetic area, which means that less power is emitted to the cookware. This cookware may not be sufficiently detected or may not be detected at all, and therefore does not heat sufficiently.
Not suitable	Cookware made from normal thin steel, glass, clay, copper or aluminium.	

Notes
- Do not use adapter plates between the hob and the cookware.
- Do not heat up empty cookware and do not use cookware with a thin base, as this may become very hot.

5 Familiarising yourself with your appliance

5.1 Control panel

Individual details, such as colour and shape, may differ from the figure.

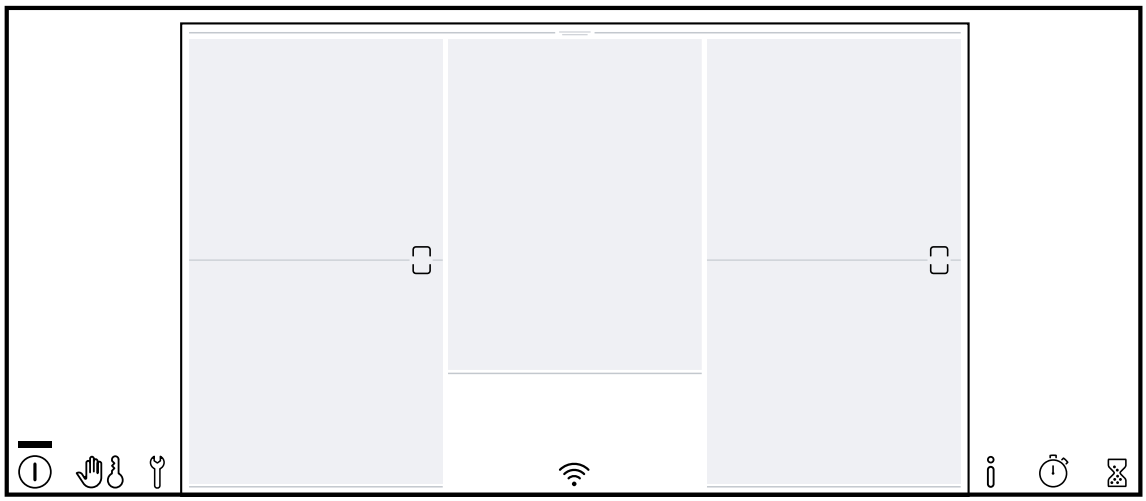

Notes
- Always keep the control panel clean and dry.
- Do not place any cookware near the displays or buttons. The electronics may overheat.

Touch buttons

When you switch on the hob, the symbols for the controls available at this time light up.

Button	Function
⏻	Main switch
	Wipe protection Childproof lock
	Basic settings
	Info menu
	Count-up timer
	Timer
	FlexInduction
0....Boost	Settings area ■ Switch-off timer ■ 1....9 power levels ■ Keep-warm function ■ PowerBoost ■ PanBoost
menu	Cooking modes menu ■ Power levels ■ MoveMode ■ PerfectFry Sensor ■ PerfectCook Sensor ■ Meal assistant

Buttons in connection with Home Connect

As soon as the connection to Home Connect has been established, the following buttons are available:

Button	Function
	Connectivity
	Hob-based hood control
auto	Ventilation control sensor
	Hood lighting

5.2 Touch display

You can use the touch display to operate the appliance simply and intuitively.

Main screen

The main view displays an overview of the hob's cooking zones. Cooking modes, power levels and time-setting options are shown on the displays for the active cooking zones.

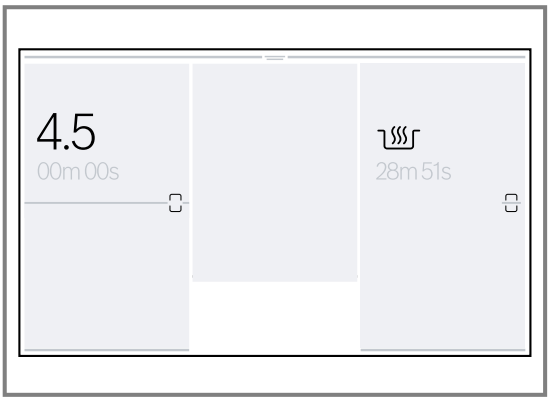

Settings range

You can use this function to set the power level, the cooking time programming and the various cooking modes for the selected cooking zone.

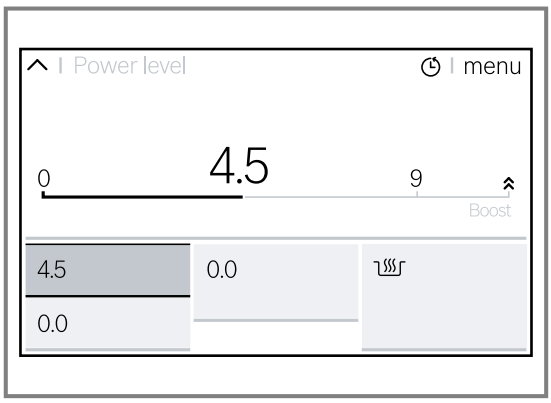

Status bar

The information displayed varies depending on the settings made: Timer, kitchen clock

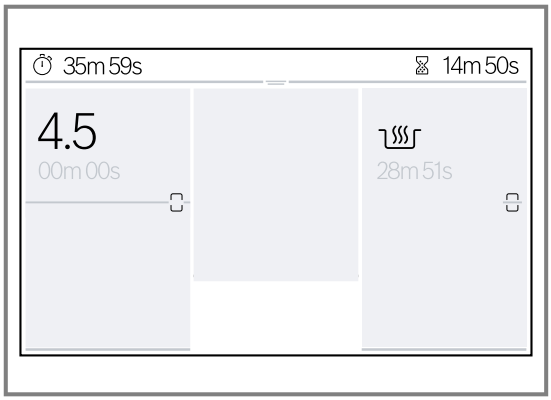

Displaying the status bar

1. Touch the top of the screen and swipe your finger up and down.

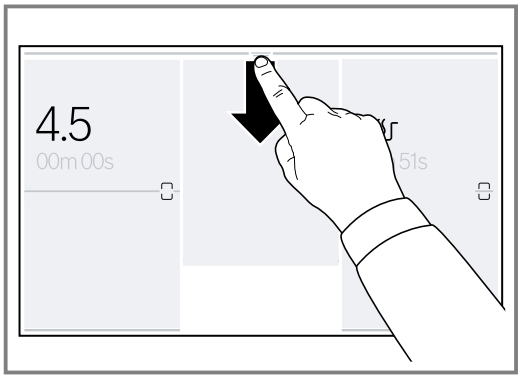

✔ The status bar is displayed.
2. Drag the status bar upwards to hide it.

Info menu

You can call up information about the appliance and the current functions.

Opening the info menu

1. Touch ⓘ.
2. Touch the symbol for the function you require and hold it for a few seconds.

✔ On the display, an info window appears that describes the current function.

3. To return to the main view, touch ^.

Cooking modes menu

The hob has a number of different cooking modes.

To access it, touch menu in the settings area for the selected cooking zone.

Symbol	Cooking mode	Function
	Power levels	Selecting the power level for the cooking zone.
	MoveMode	Setting the power level via the position of the cookware in the cooking zone.
	PerfectFry Sensor	Fry at the right temperature.
	PerfectCook Sensor	The wireless cooking sensor automatically detects the temperature as cooking progresses. Available after connection to the wireless cooking sensor.
	Meal assistant	Frying and cooking with preselected settings for particular dishes.

5.3 Distribution of the cooking zones

The specified power has been measured with the standard pots, which are described in IEC/EN 60335-2-6. The power may vary depending on the size of the cookware or cookware material.

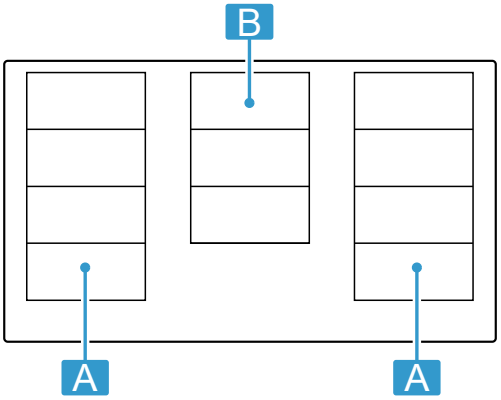

Area	Highest power level	
A	Power level 9 PowerBoost	2200 W 3700 W

Area	Highest power level	
A	Power level 9 PowerBoost	3300 W 3700 W
B	Power level 9 PowerBoost	2600 W 3700 W

5.4 Cooking zone

Before you start cooking, check whether the size of the cookware fits the cooking zone that you want to use for cooking:

Area	Cooking zone type
	Single-circuit cooking zone
	Flex Zone → *"FlexInduction", Page 11*
	Central single cooking zone

5.5 Residual heat indicator

When the cooking zones are switched off, the zone indicators light up red whilst the cooking zones are still hot.
Do not touch the cooking zone if the cooking zone indicator is lit red.

6 Before using for the first time

Observe the following recommendations.

6.1 Initial start-up

When you switch on the appliance for the first time, the standard language setting appears on the display as a first step to configure the hob.
You can change these settings at any time in the basic settings. → *Page 21*

6.2 Setting Home Connect

To start the connection settings, select the Home Connect setting in the basic settings and follow the instructions in the section entitled
→ *"Home Connect ", Page 22*.

6.3 Cooking with induction

In comparison to conventional hobs, induction technology brings with it a series of changes and has a number of benefits such as time savings when cooking and frying, energy savings as well as greater ease of cleaning and care. It also offers improved heat control as the heat is generated directly in the cookware.

7 Basic operation

7.1 Switching the hob on

- ▸ Touch ⏻.
  A signal tone sounds and the touch display lights up.
- ✔ The hob is ready to use.

ReStart

- ▸ If you switch the appliance on within 10 minutes of switching it off, the hob operates with the settings that were previously set. You can activate this function in the basic settings. → *Page 21*

7.2 Switching the hob off

- ▸ Touch ⏻ until the displays go out.
- ✔ All cooking zones are switched off.

Note: If all of the cooking zones are switched off for longer than 30 seconds, the hob is automatically switched off.

7.3 Setting the power level in the cooking zones

The cooking zone has 17 power levels, which are displayed from 1 to 9 with intermediate values. Select the best power level for the food and the planned cooking process.

1. Touch the required cooking zone.
✔ The settings area for the cooking zone that you have selected appears on the display panel.
2. Swipe your finger over the settings area and touch the power level that you require.
✔ The power level has been set.
3. To return to the main screen, touch the cooking zone display.

Note: If no cookware is placed on the cooking zone or the pot is not suitable, the selected power level flashes. After a certain period of time, the cooking zone switches itself off.

Changing the power level and switching off the cooking zone

1. Select the cooking zone.
2. Select the required power level or set it to 0 in the settings area.
✔ The cooking zone's power level changes or the cooking zone switches itself off and the residual heat indicator appears.

Quick selection

▸ Use your finger to swipe right over the cooking zone to set the power level to 9.0. Use your finger to swipe left over the cooking zone to set the power level to 0.0.
You can activate this function in the basic settings.
→ *Page 21*

7.4 Cooking tips

- When heating up puree, cream soups or thick sauces, stir occasionally.
- To preheat, set the power level 8-9.
- When cooking with the lid on, reduce the power level as soon as you see steam escaping. The cooking result is not affected by the steam escaping.
- After cooking, place a lid on the cookware until you serve the dish.
- To cook with the pressure cooker, observe the manufacturer's instructions.
- Do not cook food for too long, otherwise nutrients will be lost. The kitchen timer enables you to set the optimal cooking time.
- Ensure that the oil does not smoke.
- To brown the food, fry it in small portions, one after the other.
- Some items of cookware may reach high temperatures while the food is cooking. You should therefore use oven gloves.
- You can find recommendations for energy-efficient cooking under
→ *"Saving energy", Page 5*

Cooking recommendations

The table shows which power level (⎽=☰) is suitable for which food. The cooking time (◷ min) may vary depending on the type, weight, thickness and quality of the food.

	⎽=☰	◷ min
Melting		
Chocolate coating	1 - 1.5	-
Butter, honey, gelatine	1 - 2	-
Heating and keeping warm		
Stew, e.g. lentil stew	1.5 - 2	-
Milk[1]	1.5 - 2.5	-
Boiled sausages[1]	3 - 4	-
Defrosting and heating		
Spinach, frozen	3 - 4	15 - 25
Goulash, frozen	3 - 4	35 - 55
Poaching, simmering		
Potato dumplings [1]	4.5 - 5.5	20 - 30
Fish [1]	4 - 5	10 - 15
White sauces, e.g. Béchamel sauce	1 - 2	3 - 6
Whisked sauces, e.g. Béarnaise sauce, Hollandaise sauce	3 - 4	8 - 12
Boiling, steaming, braising		
Rice, with double the volume of water	2.5 - 3.5	15 - 30
Rice pudding	2 - 3	30 - 40
Unpeeledboiled pots	4.5 - 5.5	25 - 35
Boiled potatoes	4.5 - 5.5	15 - 30
Pasta [1]	6 - 7	6 - 10
Stew	3.5 - 4.5	120 - 180
Soups	3.5 - 4.5	15 - 60
Vegetables	2.5 - 3.5	10 - 20
Vegetables, frozen	3.5 - 4.5	7 - 20
Stew in a pressure cooker	4.5 - 5.5	-
Stewing		
Rolled roasting joint	4 - 5	50 - 65
Pot roast	4 - 5	60 - 100
Goulash	3 - 4	50 - 60
Braising/frying with a small amount of fat [1]		
Escalope, plain or breaded	6 - 7	6 - 10
Escalope, frozen	6 - 7	6 - 12
Chops, plain or breaded	6 - 7	8 - 12

[1] Without lid

	⎽=☰	◷ min
Steak (3 cm thick)	7 - 8	8 - 12
Poultry breast (2 cm thick)	5 - 6	10 - 20
Poultry breast, frozen	5 - 6	10 - 30
Rissoles (3 cm thick)	4.5 - 5.5	20 - 30
Hamburgers (2 cm thick)	6 - 7	10 - 20
Fish and fish fillet, plain	5 - 6	8 - 20
Fish and fish fillet, breaded	6 - 7	8 - 20
Fish, breaded and frozen, e.g. fish fingers	6 - 7	8 - 15
Prawns and scampi	7 - 8	4 - 10
Sautéing fresh vegetables and mushrooms	7 - 8	10 - 20
Stir-fry, vegetables, meat cut in strips Asian-style	7 - 8	15 - 20
Frozen dishes, e.g. stir-fries	6 - 7	6 - 10
Pancakes, cooked one after the other	6.5 - 7.5	-
Omelette (cooked one after the other)	3.5 - 4.5	3 - 10
Fried eggs	5 - 6	3 - 6
Deep-frying, 150–200 g per portion in 1–2 l oil, deep-fat fried in portions[1]		
Frozen products, e.g. chips, chicken nuggets	8 - 9	-
Croquettes, frozen	7 - 8	-
Meat, e.g. chicken portions	6 - 7	-
Fish, breaded or battered	6 - 7	-
Vegetables, mushrooms, breaded, beer-battered or tempura	6 - 7	-
Small baked items, e.g. doughnuts, battered fruit	4 - 5	-

[1] Without lid

8 FlexInduction

The FlexZone allows you to position cookware of any shape or size any way you like. It consists of four inductors that work independently of each other. If the FlexZone is in use, only the area that is covered by the cookware is activated.

8.1 Positioning the cookware

The flexible cooking zone can be configured in two ways, depending on which cookware is used. In order to guarantee good thermal detection and heat distribution, we recommend positioning the cookware in the centre, as shown in the figures.

As a connected cooking zone

Recommended for cooking with just one item of cookware.

- Position the cookware depending on the size:

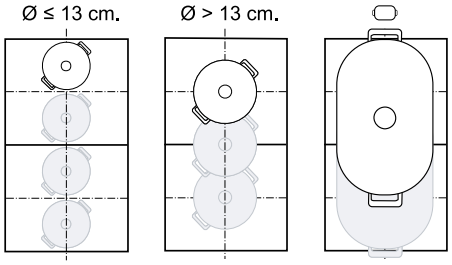

- Recommended oblong cookware ⬭:

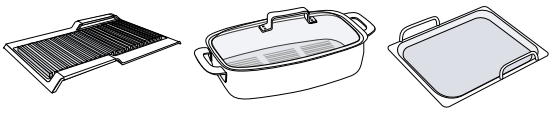

As two separate cooking zones

Recommended for cooking with two items of cookware.
You can use the front and rear zone independently of one another, and set a separate power level for each zone.

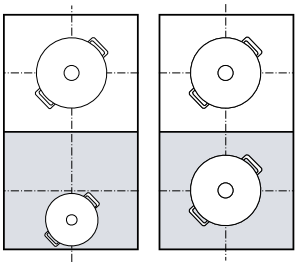

Centre cooking zone

The cooking zone consists of three inductors that work as a single cooking zone.

Positioning the cookware

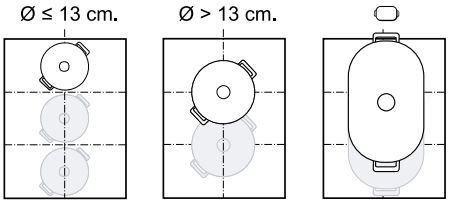

Caution

Do not place cookware in the middle between the right and left zones. The cooking zones are not activated correctly and you do not achieve a good cooking result.

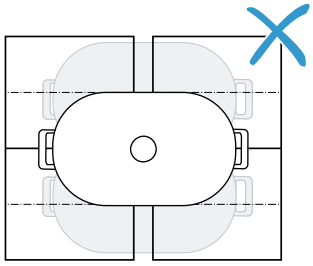

8.2 FlexInduction connect

By default, the FlexZone is configured as two separate cooking zones. Switch on the following function to connect the cooking zones:

1. Set the cookware down on the cooking zone.
2. Touch ⊓.

✔ ⊓ lights up. The FlexZone is connected.

Notes

- You can change the default setting for the FlexZone. You can find out how to do this in the "Basic settings" section. → *Page 21*
- If you move or lift the cookware from an active connected cooking zone, an automatic search starts. Each item of cookware that is found within the cooking zone during this search is heated at the previously selected power level.

8.3 FlexInduction disconnecting

▸ Touch ⊓.

✔ The cooking zones are separate and work independently of each other.

9 MoveMode

You can use this function to change the power level for an item of cookware by simply moving it within the FlexZone. For this, the zone is divided into three areas with different power levels.

9.1 Positioning and moving the cookware

Only use one item of cookware. The cooking area depends on the cookware used, as well as its size and positioning.
Each cooking area has a preset power level:

- Front section = power level 9.0
- Middle section = power level 5.0
- Rear section = power level ♨.

You can change the standard setting for the default power levels. You can find out how to do this in the "Basic settings" section → *Page 21*.

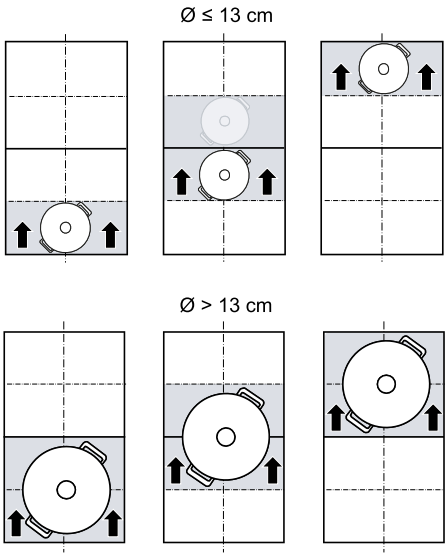

9.2 Activating MoveMode

Requirement: Only place one item of cookware on a FlexZone.

1. Select one of the two cooking zones in the FlexZone.
2. Touch menu.
3. Select ⛶

✔ ⛶ lights up.

✔ The function is switched on.

Note: You can change the power levels of the zones during cooking.

9.3 Deactivating MoveMode

1. Select a cooking zone.
2. Touch menu and switch to a different cooking mode.
✔ The function is switched off.

10 Time-setting options

Your hob has various functions for setting the cooking time:
- Switch-off timer
- Timer
- Count-up timer

10.1 Switch-off timer

You can use this function to programme a cooking time for one or more cooking zones. The cooking zone is automatically switched off once the time that is set has elapsed.

Switching on Switch-off timer

1. Select the cooking zone and the power level.
2. Touch ◷ in the settings area.
3. Set the cooking time in the settings area.
4. Touch ▷ to confirm.
✔ The cooking time begins to elapse.
✔ Once the cooking time has elapsed, the cooking zone is switched off and a signal sounds.

Notes
- When you set a cooking time for a cooking zone in which the PerfectFry Sensor is activated, the cooking time will not start counting down until the selected temperature level has been reached.
- When you set a cooking time for a cooking zone in which the PerfectCook Sensor is activated, the cooking time will not start counting down until the selected temperature level has been reached.

Changing or switching off Switch-off timer

1. Select the cooking zone and touch ◷.
2. Change the cooking time in the programming area or touch ↺ to delete the time.
3. Touch ▷ to confirm the selected setting.
4. Touch ❮ and then ⌃ to return to the main view.

10.2 Timer

You can use this function to switch on a timer. This function operates independently of the cooking zones and other settings. It does not automatically switch off the cooking zones.

Switching on Timer

1. Touch ⌛.
2. Select the required time in the programming area.
3. Touch ▷ to confirm the setting.
✔ The time starts to elapse.
✔ A signal tone sounds once the time has elapsed.
4. Touch ⌛.
✔ The displays go out and the signal tone stops.

Changing or switching off the Timer

1. Touch ⌛.
2. Change the time in the programming area or touch ↺ to delete the time.
3. Touch ▷ to confirm the selected setting.
4. To return to the main view, touch ⌃.

10.3 Count-up timer

The stopwatch function displays the time that has elapsed since activation.

Switching on Count-up timer

▸ Touch ⏱.
✔ The time starts to elapse.

Switching off Count-up timer

1. Touch ⏱.
2. Touch ↺. The time display is set to 00 m 00 s. To switch the time display on again, touch ▷.
3. To return to the main view, touch ⌃.

11 PowerBoost

This function allows large volumes of water to be heated up even more quickly than with power setting 9. This function is available for all cooking zones, provided the other cooking zone in the same group is not in use.

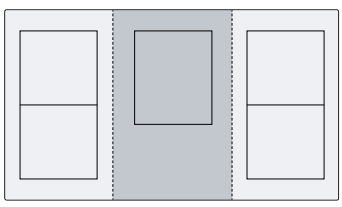

11.1 Switching on PowerBoost

1. Select the cooking zone.
2. Select and hold Boost in the settings area until ⌂ and ⌂ light up.
3. Without lifting your finger off, touch the ⌂ symbol.
4. Lift your finger.
✔ The function is switched on.

Note: You can also switch on this function when cooking with a connected FlexZone.

11.2 Switching off PowerBoost

1. Select the cooking zone.

2. Set a different power level in the settings area.
✔ The function is switched off.

Note: In certain circumstances, the function is automatically switched off to protect the electronic components inside the PCB.

12 PanBoost

You can use this function to heat up pans more quickly than with power level 9.
This function is available for all cooking zones, provided the other cooking zone in the same group is not in use.

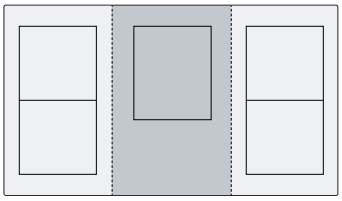

12.1 Recommended applications

- Do not place a lid on the pan.
- Never leave pans unattended when they are heating up.
- Only use cold pans.
- Use pans with a completely flat base. Do not use pans with a thin base.

12.2 Switching on PanBoost

1. Select the cooking zone.
2. Select and hold Boost in the settings area until and light up.
3. Without lifting your finger off, touch the symbol.
4. Lift your finger.

✔ The function is switched on.

Note: You can also switch on this function when cooking with a connected FlexZone.

12.3 Switching off PanBoost

1. Select the cooking zone.
2. Set a different power level in the settings area.

✔ The function is switched off.

Note: To avoid high temperatures, this function automatically switches itself off after 30 seconds.

13 Keep-warm function

You can use this function to melt chocolate or butter, and to keep meals warm.

13.1 Switching on Keep-warm function

1. Select the cooking zone.
2. Touch in the settings area.
lights up.

✔ The function is switched on.

13.2 Switching off Keep-warm function

1. Select the cooking zone.
2. Set to 0.
The cooking zone and switch off.

✔ The function is switched off.

14 Transfer settings

You can use this function to transfer the power level, set cooking time and selected cooking function from one cooking zone to another.

14.1 Transfer settings

Requirement: Move the cookware to a cooking zone which is not switched on, which you have not yet preset and on which no other cookware has been previously placed.

1. Move the cookware.

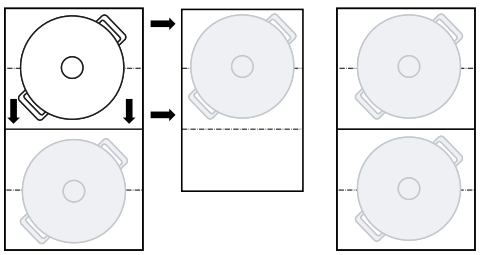

The cookware is detected. After a few seconds, the option to confirm the default settings for the new cooking zone appears on the display.
2. Confirm the settings.

✔ The settings are transferred to the new cooking zone.

15 Assist

The cooking assistant is guaranteed to make cooking simple and it promises outstanding cooking results. If you have selected the required temperature, the sensors continuously measure the temperature of the cookware and keep it constant during the cooking process.

Advantages
- Once the selected temperature is reached, it automatically keeps it constant, saving energy.
- The oil will not overheat and the food will not boil over.

15.1 PerfectFry Sensor

Suitable for cooking or reducing sauces, pancakes or frying eggs with butter, for frying vegetables or steaks up to the required level of boiling, and for keeping the temperature under control.
This function is available on all cooking zones marked with this symbol .

Temperature levels

Temperature levels for preparing meals.

Level	Temperature	Functions	Cookware
1	120 °C	Boiling and reducing sauces, fry vegetables	
2	140 °C	Searing in olive oil or butter	
3	160 °C	Frying fish and coarse foods	
4	180 °C	Deep-fat frying breaded, frozen and grilled food	
5	215 °C	High-temperature grill and griddle plate	

Recommended cookware

Special cookware has been developed for this function, which delivers the best results.

Cookware	Recommended cooking zone
Frying pan, 15 cm diameter	Single cooking zone
Frying pan, 19 cm diameter	Single cooking zone
Frying pan, 21 cm diameter	Single cooking zone
Teppanyaki	Flex Zone
Grill	Flex Zone

The recommended cookware is available from customer service, specialist retailers or our online shop www.bosch-home.com.

Note: You can also use other cookware. Depending on the composition of the cookware, the achieved temperature may differ from the selected temperature level.

Switching on the PerfectFry Sensor

1. Place empty cookware on the cooking zone.
2. Select a cooking zone.
3. Touch menu and select PerfectFry Sensor.
4. Select the required temperature level and touch ^ to return to the main screen.

✔ The function is switched on. The temperature level and light up.
✔ The temperature display lights up increasingly red until the required temperature level has been reached. A signal then sounds.

5. Add the frying fat and then the food to the frying pan.

Switching off PerfectFry Sensor

1. Select the cooking zone.
2. Set to 0.

✔ The function is switched off.

3. To exit the PerfectFry Sensor function, touch menu and select a different cooking mode.

Recommendations for cooking with the PerfectFry Sensor

The following table shows the ideal temperature levels for a selection of dishes. The temperature and the cooking time ◷ min depend on the amount, condition and quality of the food.
- Frying pan
- Teppanyaki
- Griddle plate

	Cookware		◷ min
Meat			
Escalope		4	6-10
Escalope, breaded		4	6-10
Fillet		4	6-10
Chops		3	10-15
Cordon bleu, Wiener Schnitzel		4	10-15
Steak, rare, 3 cm thick		5	6-8
Steak, medium, 3 cm thick		5	8-12
Steak, well-done, 3 cm thick		4	8-12
T-bone steak, rare, 4.5 cm thick		5	10-15
T-bone steak, medium, 4.5 cm thick		5	20-30
Poultry breast, 2 cm thick		3	10-20
Bacon		2	5-8
Minced meat		4	6-10
Hamburgers, 1.5 cm thick		3	6-15
Meatballs, 2 cm thick		3	10-20
Sausages		3	8-20
Chorizo, fresh sausages		3	10-20
Skewers, kebabs		3	10-20
Gyros		4	7-12
Fish and seafood			

	Cookware		◷ min
Fish fillet		4	10-20
Fish fillet, breaded		4	10-20
Fish, fried, whole		3	10-20
Sardines		4	6-12
Scampi, prawns		4	4-8
Squid, cuttlefish		4	6-12
Egg dishes			
Fried eggs in butter		2	2-6
Fried eggs		4	2-6
Scrambled eggs		2	4-9
Omelette		2	3-6
French toast		3	4-8
Crêpes, blinis, pancakes, tacos		5	1-3
Vegetables			
Roast potatoes		5	6-12
Chips		4	15-25
Potato pancakes		5	2-4
Onions, roasted garlic		2	2-10
Onion rings		3	5-10
Courgettes, aubergines, peppers		2	4-12
Green asparagus		3	4-15
Mushrooms		4	10-15
Vegetables, braised in oil		1	10-20
Vegetables in tempura batter		4	5-10
Frozen products			
Chicken nuggets		4	10-15
Fish fingers		4	8-12
Chips		5	4-8
Stir-fries		3	6-10
Spring rolls		4	10-30
Pastries, croquettes		5	3-8
Sauces			
Tomato sauce		1	25-35
Béchamel sauce		1	10-20
Cheese sauce		1	10-20
Sweet sauces		1	15-25
Sauces, reduced		1	25-35
Other			
Fried cheese		3	7-10
Croutons		3	6-10
Toasted bread		4	4-8
Dried ready meals		1	5-10
Almonds, walnuts, pine nuts, roasted		4	3-15
Popcorn		5	3-4

15.2 PerfectCook Sensor

You can use this function to heat up, cook or boil foods, cook with the pressure cooker or fry in a pot with a lot of oil at a controlled temperature.
In order to use these functions, you need the wireless cooking sensor for wireless cooking.
This function is available for all cooking zones with the wireless cooking sensor on the normal cookware.

Temperature levels

Temperature levels for preparing meals.

Level	Temperature	Functions	Cookware
1	70 °C	Heating and keeping warm	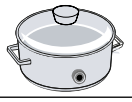
2	90 °C	Cooking	
3	100 °C	Bringing to the boil	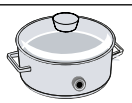
4	120 °C	Cooking in a pressure cooker	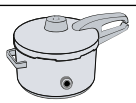
5	180 °C	Deep-fat frying	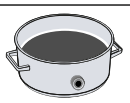

Tips PerfectCook Sensor

- The wireless cooking sensor measures the temperature of the liquid through the silicone base attached to the container. To ensure correct measurement, the silicone base must be completely covered by the liquid to be measured.
- The frame of the wireless cooking sensor and the silicone base fitted on the cookware must be completely dry before you can start cooking.
- Do not remove the wireless cooking sensor during cooking. After cooking, remove the sensor carefully as the sensor may be hot.
- To save energy, use a lid.
- Position the cookware in such a way that the wireless cooking sensor is pointing towards the outer side of the hob.
- To prevent overheating, never align the cooking sensor to any other hot cookware.

Switching on PerfectCook Sensor

Requirement: Connect the wireless cooking sensor.

1. Attach the wireless cooking sensor to the cookware.
2. Place cookware filled with sufficient liquid on the required cooking zone and put the lid on.
3. Select the cooking zone on which you have placed the cookware with the wireless cooking sensor.
4. Touch menu and select PerfectCook Sensor.
5. Then touch the centre of the wireless cooking sensor.
6. Select the corresponding temperature level for the food you want to cook.

✔ The function is switched on.

✔ The temperature level and light up. The temperature display lights up increasingly red until the water or oil has reached the appropriate temperature for adding the food for cooking. A signal tone sounds.

7. Once the signal tone has sounded, remove the lid and add the food. Cook with the lid on.

Switching off PerfectCook Sensor

1. Select the cooking zone.
2. Set to 0.
✔ The function is switched off.
3. To exit PerfectCook Sensor, touch menu and select a different cooking mode.

Recommendations for cooking with PerfectCook Sensor

The following table shows the ideal temperature levels for a selection of dishes. The temperature ℃ and the cooking time ◷ min depend on the amount, condition and quality of the food.

Heating and keeping warm

	℃	◷ min
Heating goulash	70	10-20
Heating mulled wine	70	5-15

Poaching

	℃	◷ min
Meat		
Sausages	90	10-20
Fish		
Braised fish	90	15-20
Egg dishes		
Poached eggs:	90	2-5
Potatoes		
Potato dumplings	90	30-40
Pasta and cereals		
Rice	90	25-35
Parboiled rice	90	25-35
Brown rice	90	45-55
Rice, basmati, Thai	90	8-12
Wild rice	90	20-30
Polenta	90	3-8
Semolina purée	90	5-10
Soups		
Instant creams	90	10-15
Desserts		
Rice pudding	90	40-50
Porridge	90	10-15
Chocolate pudding	90	3-5
Other		
Milk	90	3-10

Bringing to the boil

	℃	◷ min
Meat		
Meatballs	100	20-30
Chicken	100	60-90
Veal	100	60-90
Egg dishes		
Boiled eggs	100	5-10
Vegetables and legumes		
Broccoli	100	10-20
Cauliflower	100	10-20
Brussels sprouts	100	30-40
Green beans	100	15-30
Chickpeas	100	60-90
Peas	100	15-20
Lentils	100	45-60
Potatoes		
Gnocchi	100	3-6
Potatoes, boiled	100	30-45
Sweet potatoes	100	30-45
Pasta and cereals		
Durum wheat pasta	100	7-10
Fresh pasta	100	3-5
Wholemeal pasta	100	7-10
Durum wheat pasta, stuffed	100	15-20
Fresh pasta, stuffed	100	5-8
Quinoa	100	10-12
Soups		
Home-made broths	100	60-90
Instant soups	100	5-10
Desserts		
Compote	100	15-25
Frozen products		
Green beans	100	15-30

Cooking in a pressure cooker

	℃	◷ min
Meat		
Chicken	120	15-25
Veal	120	15-25
Vegetables and legumes		
Vegetables	120	3-6
Chickpeas	120	25-35
Lentils	120	10-20
Beans	120	25-35
Potatoes		
Potatoes	120	10-20
Sweet potatoes	120	10-20
Pasta and cereals		
Rice	120	6-8
Brown rice	120	12-18

	°C	min
Soups		
Home-made broths	120	20-30

Fry with a large amount of oil
Use the lid to heat the oil, and remove it to fry the food.

	°C	min
Meat		
Chicken pieces	180	10-15
Meatballs	180	10-15
Fish		
Fish, breaded, battered	180	10-15
Vegetables and legumes		
Vegetables, breaded, battered	180	4-8
Mushrooms, breaded or battered	180	4-8
Desserts		
Jam-filled doughnuts and doughnuts	180	5-10
Frozen products		
Chips	180	4-8

15.3 Wireless cooking sensor

To use PerfectCook Sensor, you must purchase a wireless cooking sensor.
You can purchase the wireless cooking sensor from customer service, in our online shop or in a specialist shop www.bosch-home.com.

Connecting the wireless cooking sensor

To connect the wireless cooking sensor to the control panel, proceed as follows:

1. Opening the basic settings → *Page 21*
2. Select the cooking sensor setting and select the "Add new cooking sensor" option.
3. Briefly touch the centre of the wireless cooking sensor within 30 seconds.
   – After a few seconds, the result of the connection between the cooking sensor and the control panel appears on the display.

	Result	
0	Connected correctly	PerfectCook Sensor is available.
1	Not connected correctly	Communication error ■ Repeat the connection process. If the result is still 1, contact customer service.
2	Not connected correctly	Communication error ■ Bluetooth communication error. Repeat the connection process. ■ You have not touched the centre of the wireless cooking sensor within 30 seconds of selecting the cooking zone. Repeat the connection process. ■ The battery in the wireless cooking sensor is flat. Replace the battery, reset the wireless cooking sensor and repeat the connection process.

Resetting the wireless cooking sensor

1. Press the centre of the cooking sensor for approx. 8 - 10 seconds.
✔ During this process, the LED display for the wireless cooking sensor lights up three times.
✔ When the LED lights up for the third time, it will start to reset the temperature sensor.
2. Now stop pressing the centre of the wireless cooking sensor.
✔ As soon as the LED goes out, this means that the wireless cooking sensor has been reset.
3. Repeat the connection process from point 2.

Setting the boiling point

The point at which water starts to boil depends on the height of your home above sea level. If the water is boiling too vigorously or not vigorously enough, you can adjust the boiling point. Proceed as follows:
Select the "Set boiling point" setting in
→ *"Basic settings", Page 21*.
The default basic setting is 200–400 m. If the home is located at this height above sea level, do not set the boiling point. Select the setting that matches your home's height above sea level.

Note: The temperature 3/100 °C is sufficient to boil efficiently. For a more intensive boil, select a lower level.

16 Wireless cooking sensor

To use PerfectCook Sensor, you must purchase a wireless cooking sensor.
You can purchase the wireless cooking sensor from customer service, in our online shop or in a specialist shop www.bosch-home.com.

16.1 Scope of delivery

After unpacking all of the parts, check for any transport damage and for completeness of delivery.

- A Wireless cooking sensor
- B Silicone patch

- C Template

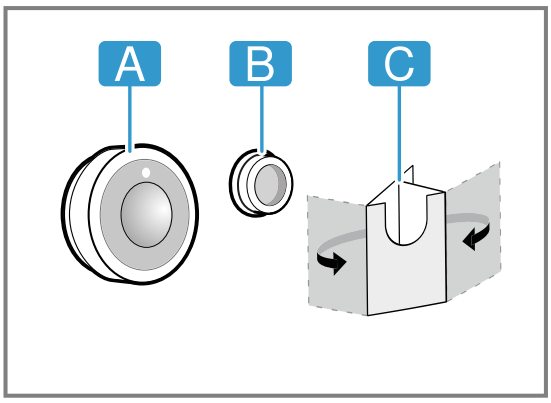

16.2 Attaching the silicone patch

The silicone patch secures the cooking sensor to the cookware. For fitting on the cookware:

1. The adhesive area on the cookware must be free from grease. Clean and dry the container thoroughly, and rub the adhesive area using alcohol, for example.
2. Remove the protective film from the silicone patch. Adhere the silicone patch to the outside of the cookware in the correct place using the enclosed template as a guide.

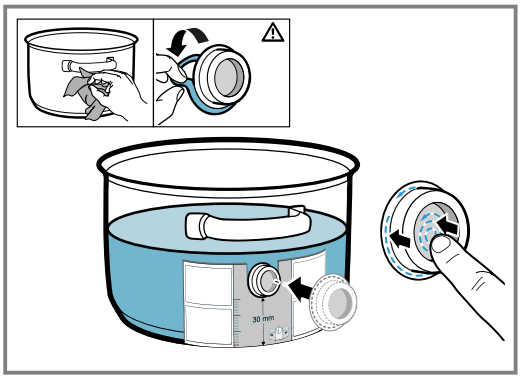

3. Press down all over the surface of the silicone patch, including in the centre.
4. Leave the adhesive to dry for one hour. Do not use or rinse out the cookware during this time.

Note: If the silicone patch comes loose, use a new one. If required, you can purchase a set with five silicone patches from specialist retailers, from our customer service or on our official website www.bosch-home.com by quoting the article number 17007119. All adhesives break down over time when they are stored. To prevent this from happening, place the silicone bases on their containers as soon as they are cleaned.

16.3 Attaching the wireless cooking sensor

1. Ensure that the silicone patch is completely dry before attaching the cooking sensor.
2. Attach the cooking onto the silicone patch so that it fits perfectly.

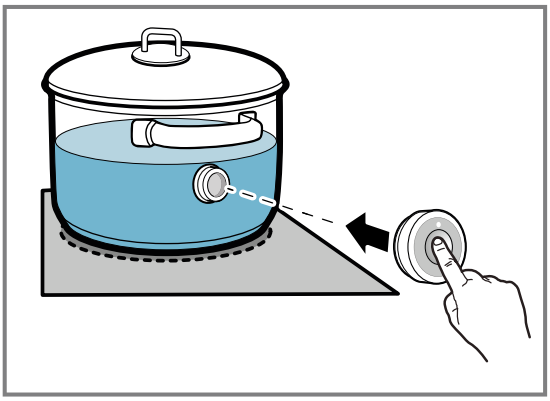

16.4 Replacing the battery

If the LED on the wireless cooking sensor does not light up when pressed, the battery is discharged. Changing the battery:

1. Remove the silicone cover from the lower section of the cooking sensor casing and remove both screws using a screwdriver.

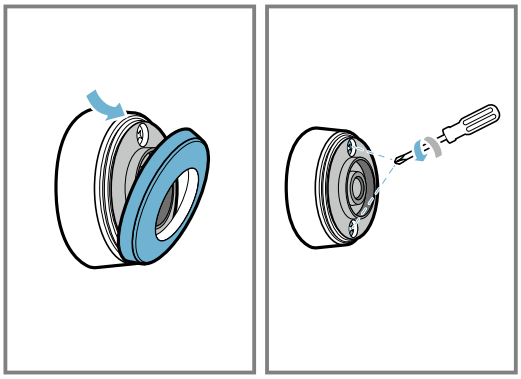

2. Open the cooking sensor lid and remove the battery from the base.

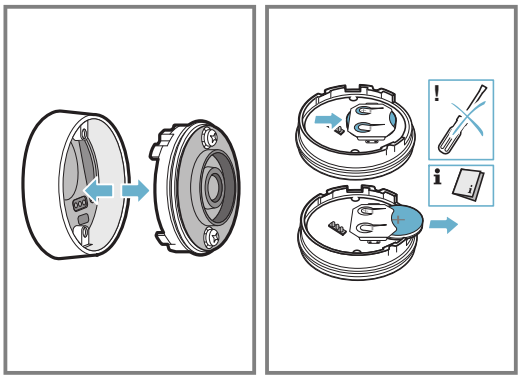

3. Insert a new battery, observing the instructions for the battery poles. Only use premium-quality CR2032 batteries.

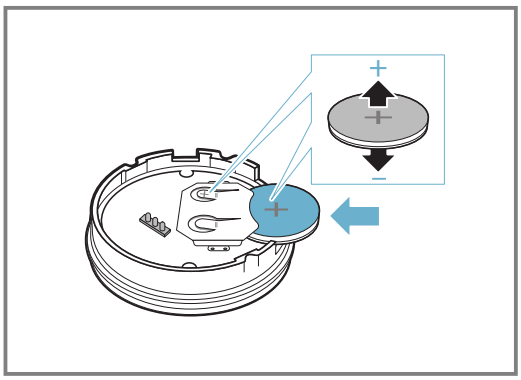

Note: Do not use any metal objects to remove the battery. Do not touch the battery connection points.

4. Close the cap on the cooking sensor. The indentations for the screws on the cap must be aligned with the indentations on the lower section of the housing. Use a screwdriver to tighten the screws and secure the silicone cover on the lower section of the cooking sensor housing.

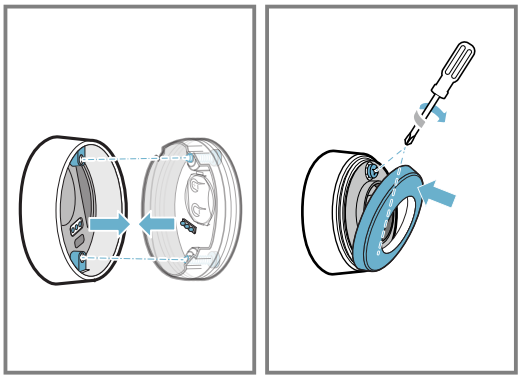

16.5 Cleaning

Cooking sensor

Clean with a damp cloth. Do not place in the dishwasher and do not get it wet.
When you are not using the cooking sensor, remove it from the cookware and store it in a clean, secure location, away from any heat sources.

Silicone patch

Clean and dry before attaching the cooking sensor. Dishwasher safe.
Note: The cookware with the silicone patch must not be left to soak for long periods in soapy water.

Sight glass for the wireless cooking sensor

Always keep the sight glass clean and dry. Proceed as follows:

1. Remove dirt and oil splatters regularly.
2. For cleaning, use a cloth or a q-tip and window-cleaning solution.

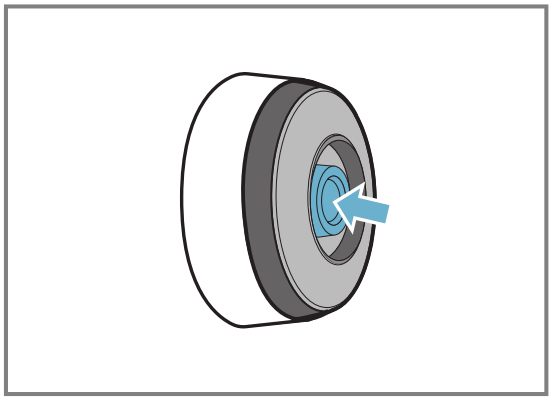

Notes

- Do not use hard or rough objects such as bristle brushes or scouring pads to clean the hob, and do not use scouring agents.
- Do not touch the wireless cooking sensor with your fingers; this will soil or scratch it.

16.6 Declaration of Conformity

BSH Hausgeräte GmbH hereby declares that the appliance with wireless cooking sensor function meets the basic requirements and other relevant provisions of the Directive 2014/53/EU.
A detailed Declaration of Conformity in accordance with Directive RED can be found at www.bosch-home.com on the product page for your appliance under "Additional documents.
The logos and the Bluetooth® brand are registered trademarks and property of Bluetooth SIG, Inc. These trademarks are used by BSH Hausgeräte GmbH under licence. All other trademarks and trade names are owned by the respective companies.

17 Meal assistant

All types of food can be prepared with this function. The appliance selects the optimal setting for you.
The recipes for the PerfectCook Sensor function are only available after connecting to the wireless cooking sensor.

17.1 Activating the meal assistant

1. Select a cooking zone.
2. Touch menu and select .
3. Select the required programme group and food.
4. Follow the instructions on the display.

17.2 Cancelling the meal assistant

1. Select the cooking zone.
2. Touch menu and switch to a different cooking mode.

✔ The function is switched off.

18 Childproof lock

The hob is equipped with a childproof lock. This prevents children from switching on the hob.

18.1 Switching on Childproof lock

Requirement: All cooking zones must be switched off.

1. Touch ⏻.
2. Touch 🖐 and follow the instructions on the display.

✔ The hob is locked.

18.2 Switching off Childproof lock

▸ Follow the instructions in the display panel.

✔ The lock is released.

18.3 Automatic childproof lock

You can also activate the childproof lock automatically every time the hob is switched off.
You can find out how to switch the function on and off in the "Basic settings" section → *Page 21*.

19 Wipe protection

You can use this function to lock the control panel for cleaning so that you do not accidentally change the settings.
The lock has no effect on the main switch.

19.1 Switching on Wipe protection

▸ Touch 🖐. A signal sounds.

✔ The control panel remains locked for 30 seconds.

✔ After 30 seconds, a signal tone sounds and the control panel is unlocked.

19.2 Switching off Wipe protection

To cancel the function early, follow the instructions on the display.

20 Individual safety switch-off

The safety function is switched on if one cooking zone is in operation for an extended period and you do not change any settings. A message appears on the display and the cooking zone stops heating.
To switch off the display and reset the cooking zone, touch any button.

21 Basic settings

You can configure the basic settings for your appliance to meet your needs.

21.1 Overview of the basic settings

Setting	Description and options
Language	Change the display language for the appliance.
Home Connect	You can use this function to connect the appliance to your home network and a mobile device.
Hob-based hood control	You can use this function to control certain functions of the extractor hood via the hob.
Signal tones	You can use this function to select warning tones that the appliance is to output.
Duration of the warning signal	You can use this function to change the duration of the warning signal.
Signal tone volume	You can use this function to change the volume of the signal tones.
Button tones	You can use this function to select whether the appliance emits tones when you touch the buttons on the touch display.
Display brightness	Change the brightness of the display.
FlexInduction	You can use this function to set the switch-on mode for the function after the hob has been switched on: Two independent cooking zones or one single zone.
MoveMode	You can use this function to change the preset power levels of the three cooking areas of the FlexZone.
Childproof lock	You can use this function to automatically lock the hob to prevent children from using the appliance without supervision.
Quick selection	You can use this function to switch on the power level quickly using the main display.

Setting	Description and options
Brand logo	You can use this function to set whether the brand logo is to be displayed when you switch on the hob.
ReStart	You can use this function to set how long the appliance saves the most recently used settings when you switch off the appliance.
Power limitation	This enables you to limit the total power of the hob, if required, due to the circumstances of your electrical installation. The available settings depend on the maximum power of the hob. You can find precise information on the rating plate. If the function is switched on and the hob has reached the set power limit, _ is displayed and you cannot select a higher power level.
Energy consumption display	Shows the total energy consumption in kWh between switching the cooking zone on and off. The accuracy of the display depends on various factors such as the voltage quality of the power supply.

Setting	Description and options
Cooking sensor	Add a new wireless cooking sensor.
Setting the boiling point	You can enter your height above sea level to improve the cooking sensor's accuracy.
Cookware test	You can use this function to test the quality of the cookware.
Appliance information	You can use this function to call up information about the appliance.
Factory settings	Reset all settings to the factory settings.

21.2 Calling up basic settings

Requirement: All cooking zones must be switched off.

1. Touch ⚙.
2. Drag your finger to scroll through the available settings.
3. To call up the submenu and select the required option, touch a setting.
   To return to the previous menu, touch ❮ within a submenu.
4. Before you exit the basic settings, save or cancel the settings in the confirmation screen.
5. Touch ✖ to exit.

22 Cookware test

The quality of the cookware affects the speed and the result of the cooking process.
You can use this function to test the quality of the cookware.
Before the test, ensure that the size of the cookware base corresponds to the size of the cooking zone being used.
Access is via the basic settings. → *Page 21*

22.1 Carrying out Cookware test

As a single cooking zone, the flexible cooking zone is set in such a way that only the individual item of cookware is checked.

1. At room temperature, place the cookware with approx. 200 ml water in the centre of the cooking zone that best fits the base of the cookware in terms of size.
2. Call up the basic settings and select the "Test cookware" option.
3. Follow the instructions on the display panel.

✔ After 10 seconds, the result appears in the cooking zone displays.

Note: To activate the function, return to the basic settings and select Cookware test.

23 Home Connect

This appliance is network-capable. Connecting your appliance to a mobile device lets you control its functions via the Home Connect app, adjust its basic settings and monitor its operating status.
The Home Connect services are not available in every country. The availability of the Home Connect function depends on the availability of Home Connect services in your country. You can find information about this at: www.home-connect.com.
The Home Connect app guides you through the entire login process. Follow the instructions in the Home Connect app to configure the settings.

Tips

- Please consult the documents supplied by Home Connect.
- Please also follow the instructions in the Home Connect app.

Notes

- Please note the safety precautions in this instruction manual and make sure that they are also observed when operating the appliance via the Home Connect app.
  → *"Safety", Page 2*
- Hobs are not designed to be left unattended. Always monitor the cooking process.

- Operating the appliance on the appliance itself always takes priority. During this time it is not possible to operate the appliance using the Home Connect app.
- In networked standby mode, the appliance requires a maximum of 2 W.

23.1 Setting up Home Connect

Requirements

- The appliance is connected to the power supply and is switched on.
- You have a mobile device with a current version of the iOS or Android operating system, e.g. a smartphone.
- The mobile device and the appliance are within range of your home network's Wi-Fi signal.

1. Download the Home Connect app.

GET IT ON Google Play

Download on the App Store

2. Open the Home Connect app and scan the following QR code.

3. Follow the instructions in the Home Connect app.

23.2 Overview of the Home Connect settings

You can adjust the settings and network settings for Home Connect by going to your hob's basic settings. The hob shows the setting "Set using the assistant" if the hob is not connected to the home network. All other settings are only displayed if the hob is already connected to the Wi-Fi.

Setting	Description and options
Set using the assistant	The hob can be set up to automatically log into your home network, or you can do this manually. ■ Use the assistant to configure the settings (automatic connection to the home network).[1] ■ Use the assistant to configure the settings: WPS not supported (manually log into your home network).
Connect to app	You can connect the hob to one or more Home Connect accounts.

[1] Factory setting

Setting	Description and options
Set using the app	■ Off: Only the hob's current status is displayed in the app. ■ On[1]: You can send cooking settings from the app to the hob. The cooking settings that are sent must be confirmed on the hob.
Wi-Fi	You can switch off the hob's wireless module to disconnect it from the Wi-Fi. ■ Deactivated: The wireless module is switched off. ■ Activated[1]: Wireless module connected.
Disconnecting from the network	You can delete the saved connections to the Wi-Fi. The network connection is also deleted if you restore the factory settings on your hob.
Appliance info	You can display information about Home Connect and the network.

[1] Factory setting

23.3 Wi-Fi symbol

The Wi-Fi indicator on the main screen changes according to the status and quality of the connection and the availability of the Home Connect server.
If you press and hold the symbol for at least two seconds, the display shows a description of the symbol.

23.4 Changing settings via the Home Connect app

You can use the Home Connect app to change the settings for the cooking zones and send them to the hob.

Requirements

- The hob is connected to the Wi-Fi and to the Home Connect app.
- In order to set the hob via the Home Connect app, the basic setting "Setting via the app" must be switched on. The basic setting is switched on on delivery. If the option for the transmission of settings has been deactivated, only the hob's operating statuses will be displayed in the Home Connect app.

1. Select the setting in the Home Connect app and send it to the hob.
   Follow the instructions in the Home Connect app.
   Settings that you send from the Home Connect app to the hob must be confirmed on the hob.
✔ If cooking settings are transmitted to a cooking zone, the display shows a message.
2. To confirm a setting, touch "Apply".
3. To discard the setting, touch "Discard".

23.5 Software update

Your appliance's software can be updated using the software update function, e.g. for the purposes of optimisation, troubleshooting or security updates.
To do this, you must be a registered Home Connect user, have installed the app on your mobile device and be connected to the Home Connect server.

As soon as a software update is available, you will be informed via the Home Connect app and will be able to start the software update via the app. Once the update has been successfully downloaded, you can start installing it via the Home Connect app if you are in your WLAN home network (Wi-Fi). The Home Connect app will inform you once installation is successful.

Notes

- You can continue to use your appliance as normal while updates are downloading. Depending on your personal settings in the app, software updates can also be set to download automatically.
- We recommend that you install security updates as soon as possible.

23.6 Remote diagnostics

Customer Service can use Remote Diagnostics to access your appliance if you contact them, have your appliance connected to the Home Connect server and if Remote Diagnostics is available in the country in which you are using the appliance.

Tip: For further information and details about the availability of Remote Diagnostics in your country, please visit the service/support section of your local website: www.home-connect.com

23.7 Data protection

Please see the information on data protection.
The first time your appliance is registered on a home network connected to the Internet, your appliance will transmit the following types of data to the Home Connect server (initial registration):

- Unique appliance identification (consisting of appliance codes as well as the MAC address of the Wi-Fi communication module installed).
- Security certificate of the Wi-Fi communication module (to ensure a secure data connection).
- The current software and hardware version of your appliance.
- Status of any previous reset to factory settings.

This initial registration prepares the Home Connect functions for use and is only required when you want to use the Home Connect functions for the first time.

Note: Please note that the Home Connect functions can only be utilised with the Home Connect app. Information on data protection can be retrieved in the Home Connect app.

24 Hob-based hood control

If both appliances are Home Connect-compatible, connect the appliances in the Home Connect app. To do this, connect the two appliances to Home Connect and follow the instructions in the app.

Notes

- Regular security updates are provided for your appliance. If you have connected your hob directly to an extractor hood, both of these appliances cannot receive these security updates. To ensure the safe use of the appliance, we recommend connecting both appliances to each other via Home Connect and installing these updates as soon as they are provided. A Home Connect account (which is free of charge) is required for this.
- Using the controls on the extractor hood always takes priority. It is not possible to use the hob-based hood control during this time.
- In networked standby mode, the appliance requires a maximum of 2 W.
- You can only connect to the extractor hood via the Home Connect app. Other connection routes are no longer supported.

24.1 Resetting Home Connect settings

If you have problems connecting your appliance to the WLAN home network (Wi-Fi) or if you want to log your appliance onto a different WLAN home network (Wi-Fi) , you can reset the Home Connect settings.

Note: If you reset the Home Connect settings, the connection to any extractor hood will also be terminated.

1. Touch to open the basic settings.
2. Select the "Hood control" setting.
3. Touch "Disconnect".

24.2 Controlling the extractor hood via the hob

You can change the behaviour of your extractor hood in the basic settings of your hob, depending on switch-on/off of the hob or individual cooking zones.
You can select other settings using the controls on the hob.

Setting the fan

1. In the status bar, touch .
2. Select a fan setting on the control panel.
   You can choose between the levels 1, 2 and 3.
   To set an intensive setting, touch boost or power boost.

Switching off the fan

1. In the status bar, touch .
2. Select fan setting 0.

Switching on automatic mode

1. In the status bar, touch .
2. Touch auto in the settings area.

✔ auto lights up red.
✔ The fan starts automatically when steam is produced.

Switching off automatic mode

1. In the status bar, touch .
2. Select fan setting 0.

Setting the hood lighting

You can switch the hood lighting on and off using the control panel of the hob.

▸ To switch the lighting on, touch in the status bar.

24.3 Overview of the hood control settings

You can change the behaviour of your extractor hood in the basic settings of your hob, depending on switch-on/off of the hob or individual cooking zones.
The display shows the settings only when the appliance has been connected to the extractor hood.

Setting	Selection	Description
Fan control (automatic start)	Switched off – The extractor hood must be switched on manually, if required. Switched on in automatic mode[1] – In automatic mode, the hood switches itself on when you switch on any of the cooking zones. Switched on in standard mode – The extractor hood is switched on at a specified setting when a cooking zone is switched on.	You can set whether/how the fan starts when you switch on the hob.
Fan run-on	Fan off. Switched on in automatic mode.[1] Switched on with standard fan run-on. The fan settings cannot be adjusted when the hob is switched off.	You can set whether/how the continues to run when you switch off the hob.
Automatic light activation	■ Off ■ On[1] – The light is switched on when the hob is switched on.	You can set whether the lighting for the extractor hood switches on automatically with the hob.
Automatic light deactivation	■ Off[1] ■ On – The light switches itself off when the hob is switched off.	You can set whether the lighting for the extractor hood switches off automatically with the hob.
Disconnect	-	With this setting, you reset the saved connections to the Wi-Fi or go back to the extractor hood.

[1] Factory setting (may vary according to model)

25 Cleaning and servicing

To keep your appliance working efficiently for a long time, it is important to clean and maintain it carefully.

25.1 Cleaning products

You can obtain suitable cleaning products and glass scrapers from customer service, a retailer or the online shop www.bosch-home.com.

ATTENTION!
Unsuitable cleaning products may damage the surfaces of the appliance.
- ▸ Never use unsuitable cleaning products.
- ▸ Do not use cleaning products while the hob is still hot. This may cause marks on the surface.

Unsuitable cleaning products
- ■ Undiluted detergent
- ■ Detergent intended for dishwashers
- ■ Abrasive cleaning products
- ■ Aggressive cleaning products such as oven spray or stain remover
- ■ Abrasive sponges
- ■ High-pressure or steam jet cleaners

25.2 Cleaning the hob

Clean the hob after every use to stop cooking residues from getting burnt on.

Requirement: The hob must be cold. Do not allow the hob to cool down if it has sugar stains, plastic or aluminium foil on it.

1. Remove heavy soiling using a glass scraper.
2. Clean the hob with a cleaning agent for glass ceramic.
   Follow the cleaning instructions on the packaging of the cleaning agent.
   Tip: You can achieve good cleaning results using a special sponge for glass ceramic.

25.3 Cleaning the hob surround

If the hob frame is dirty or stained after use, clean this.

Note: Do not use a glass scraper.

1. Clean the hob frame with hot soapy water and a soft cloth.
   Wash new sponge cloths thoroughly before use.
2. Dry with a soft cloth.

26 Troubleshooting

You can rectify minor faults on your appliance yourself. Read the troubleshooting information before contacting after-sales service. This will avoid unnecessary costs.

⚠ WARNING – Risk of injury!

Improper repairs are dangerous.

- ▸ Repairs to the appliance should only be carried out by trained specialist staff.
- ▸ If the appliance is defective, call Customer Service.

⚠ WARNING – Risk of electric shock!

Incorrect repairs are dangerous.

- ▸ Repairs to the appliance should only be carried out by trained specialist staff.
- ▸ Only use genuine spare parts when repairing the appliance.
- ▸ If the power cord of this appliance is damaged, it must be replaced with a special connection cable, which is available from the manufacturer or his Customer Service.

26.1 Warnings

If a problem occurs, instructions, warnings or error messages are shown automatically on the display. To eliminate the problem, follow the instructions on the touch display. If required, contact customer service and specify the exact fault code.

Notes

- If an error occurs, the appliance does not switch to standby mode.
- In order to protect the appliance's electronic parts from overheating or surge currents, the hob may temporarily reduce the power level.

26.2 Information on the display panel

Fault	Cause and troubleshooting
The hob cannot be switched on.	The power supply has been disconnected. ▸ Use other electrical appliances to check whether there has been a power failure.
	The appliance has not been connected as shown in the circuit diagram. ▸ Connect the appliance in accordance with the circuit diagram.
	Electronics fault ▸ If you are unable to rectify the fault, inform the technical after-sales service.
The touchscreen display is not responding or has frozen.	The control panel is wet or an object is covering it. ▸ Dry the control panel or remove the object.
The cooking zone's power level cannot be increased.	The hob's total power output has been limited. ▸ Change the total power under "Maximum power consumption" in the basic settings. ▸ If a very large item of cookware is being used, this may have an effect on the maximum power level for that half of the hob. Place the cookware back on the hob.
Audible signal	There is something on the touch display. **1.** Remove the object and reconfigure the hob settings. **2.** Do not place hot cookware on the control panel.
The hob is responding in an unusual manner or can no longer be operated correctly.	A fault has occurred in the electronics. **1.** Switch off the appliance using the mains fuse or the circuit breaker in the fuse box. **2.** Wait a few seconds before reconnecting the appliance.
One or all cooking zones have been automatically switched off.	The electronics have overheated and one or all of the cooking zones have been switched off.
	There is hot cookware in the vicinity of the control panel. The cooking zone has been switched off to protect the electronics.
	The cooking zone has overheated and has been switched off to protect the work surface.
The transfer settings function cannot be activated.	Electronics fault ▸ Touch any button to confirm the fault display. You can continue to cook as normal without using the Transfer settings function. Contact customer service.
E7010	The hob is unable to connect to your home network or the extractor hood. **1.** Acknowledge the fault display by touching any of the sensor fields. You can cook as usual without a connection. **2.** If the problem persists, contact our technical after-sales service.

Fault	Cause and troubleshooting
E8202	The cooking sensor has overheated and the cooking zone has been switched off. ▸ Wait until the cooking sensor has cooled down sufficiently before activating the function again.
E8203	The cooking sensor has overheated and all of the cooking zones have been switched off. ▸ When you are not using the cooking sensor, remove it from the cookware and keep it away from other cooking zones or heat sources. Switch on the cooking zones.
E8204	The battery in the cooking sensor is almost flat. The next time you cook, you may be interrupted by the battery running out. ▸ Replace the 3 V CR2032 battery. For more information, see the section entitled → *"Replacing the battery", Page 19*
E8205	The connection to the cooking sensor has been broken. ▸ Switch off the function and reactivate it.
E8206	The cooking sensor is broken/faulty. ▸ Contact the technical after-sales service.
The wireless cooking sensor display does not light up.	The wireless cooking sensor is not responding and the display does not light up. ▸ Replace the 3 V CR2032 battery. For more information, see the section entitled → *"Replacing the battery", Page 19*. ▸ If this does not solve the problem, press and hold the symbol on the cooking sensor for 8–10 seconds and then reconnect the cooking sensor to the hob. You can find more information in the section entitled → *"Connecting the wireless cooking sensor", Page 18*. ▸ If the problem persists, contact our technical after-sales service.
The display on the sensor flashes twice.	The battery in the cooking sensor is almost flat. The next time you cook, you may be interrupted by the battery running out. ▸ Replace the 3 V CR2032 battery. For more information, see the section entitled → *"Replacing the battery", Page 19*.
The display on the sensor flashes three times.	The connection to the cooking sensor has been broken. ▸ Press and hold the symbol on the cooking sensor for 8–10 seconds and then reconnect the cooking sensor to the hob. → *"Connecting the wireless cooking sensor", Page 18*
E 9000/E9010	The operating voltage is incorrect and outside of the normal operating range. ▸ Contact your energy supplier.
U400	The hob is not connected correctly. ▸ Disconnect the hob from the mains. Connect the hob in accordance with the circuit diagram.
The cooking zones do not heat up, and ⧄ is displayed.	Demo mode is activated. **1.** Disconnect the hob from the mains and, after a few seconds, reconnect it. **2.** Deactivate demo mode in the basic settings within the next three minutes.

26.3 Normal noises from your appliance

An induction hob may sometimes cause noises or vibrations, such as buzzing, crackling, hissing noises, fan noises or rhythmic noises.

27 Disposal

27.1 Disposing of old appliance

Valuable raw materials can be reused by recycling.

1. Unplug the appliance from the mains.
2. Cut through the power cord.
3. Dispose of the appliance in an environmentally friendly manner.
   Information about current disposal methods are available from your specialist dealer or local authority.



This appliance is labelled in accordance with European Directive 2012/19/EU concerning used electrical and electronic appliances (waste electrical and electronic equipment - WEEE).
The guideline determines the framework for the return and recycling of used appliances as applicable throughout the EU.

28 Declaration of Conformity

BSH Hausgeräte GmbH hereby declares that the appliance with Home Connect functionality conforms to the basic requirements and other relevant provisions of Directive 2014/53/EU.
A detailed RED Declaration of Conformity can be found online at www.bosch-home.com among the additional documents on the product page for your appliance.

CE

Hereby, BSH Hausgeräte GmbH declares that the appliance with Home Connect functionality is in compliance with relevant statutory requirements.[1]

A detailed Declaration of Conformity can be found online at www.bosch-home.co.uk among the additional documents on the product page for your appliance.[1]

UK CA

Only applies to Great Britain
2.4 GHz band (2400–2483.5 MHz): Max. 100 mW
5 GHz band (5150–5350 MHz + 5470–5725 MHz): Max. 100 mW

	BE	BG	CZ	DK	DE	EE	IE	EL	ES
	FR	HR	IT	CY	LI	LV	LT	LU	HU
	MT	NL	AT	PL	PT	RO	SI	SK	FI
	SE	NO	CH	TR	IS	UK (NI)			
5 GHz WLAN (Wi-Fi): For indoor use only.									

AL	BA	MD	ME	MK	RS	UK	UA
5 GHz WLAN (Wi-Fi): For indoor use only.							

29 Customer Service

Function-relevant genuine spare parts according to the corresponding Ecodesign Order can be obtained from Customer Service for a period of at least 10 years from the date on which your appliance was placed on the market within the European Economic Area.

Note: Under the terms of the manufacturer's warranty the use of Customer Service is free of charge.

Detailed information on the warranty period and terms of warranty in your country is available from our after-sales service, your retailer or on our website.
If you contact Customer Service, you will require the product number (E-Nr.) and the production number (FD) of your appliance.
The contact details for Customer Service can be found in the enclosed Customer Service directory or on our website.

29.1 Product number (E-Nr.) and production number (FD)

You can find the product number (E-Nr.) and the production number (FD) on the appliance's rating plate. The rating plate can be found:
- on the appliance certificate.
- on the lower section of the hob.

The product number (E no.) can also be found on the glass ceramic. You can also display the customer service index (KI) and the production number (FD) in the basic settings. → *Page 21*
Make a note of your appliance's details and the Customer Service telephone number to find them again quickly.

30 Test dishes

These recommended settings are intended for test institutes to facilitate the testing of our appliances. The tests were carried out using our cookware sets for induction hobs. If required, these accessory sets can be purchased at a later point from specialist retailers, or through our technical after-sales service or our online shop.

30.1 Melting the chocolate coating

Ingredients: 150 g dark chocolate (55% cocoa).
- 16 cm saucepan without lid
  - Boiling: Power level 1.5

[1] Only applies to Great Britain

30.2 Heating and keeping lentil stew warm

Recipe in accordance with DIN 44550
Initial temperature 20 °C
Heating up without stirring

- 16 cm saucepan with lid, amount: 450 g
  - Heating up: Duration 1 min. 30 sec., power level 9
  - Simmering: Power level 1.5
- 20 cm saucepan with lid, amount: 800 g
  - Heating up: Duration 2 min. 30 sec., power level 9
  - Simmering: Power level 1.5

30.3 Heating and keeping lentil stew warm

E.g.: Lentil diameter 5–7 mm. Initial temperature 20 °C
Stir after heating for 1 minute

- 16 cm saucepan with lid, amount: 500 g
  - Heating up: Duration approx. 1 min. 30 sec., power level 9
  - Simmering: Power level 1.5
- 20 cm saucepan with lid, amount: 1 kg
  - Heating up: Duration approx. 2 min. 30 sec., power level 9
  - Simmering: Power level 1.5

30.4 Béchamel sauce

Milk temperature: 7 °C

- 16 cm saucepan without lid, ingredients: 40 g butter, 40 g flour, 0.5 l milk with 3.5% fat content and a pinch of salt

Preparing Béchamel sauce

1. Melt the butter, stir in the flour and salt, and heat up the mixture.
   - Heating up: Duration 6 min., power level 2
2. Add the milk to the roux and bring to the boil, stirring continuously.
   - Heating up: Duration 6 min. 30 sec., power level 7
3. Once the Béchamel sauce comes to the boil, leave it on the cooking zone for a further two minutes.
   - Simmering: Power level 2

30.5 Cooking rice pudding with the lid on

Milk temperature: 7 °C
1. Heat the milk until it starts to rise up. Heat up without a lid. Stir after heating for 10 min.
2. Set the recommended power level and add rice, sugar and salt to the milk.
The cooking time, including heating up, is approx. 45 minutes.

- 16 cm saucepan, ingredients: 190 g short-grain rice, 90 g sugar, 750 ml milk with 3.5% fat content and 1 g salt
  - Heating up: Duration approx. 5 min. 30 sec., power level 8.5
  - Simmering: Power level 3
- 20 cm saucepan, ingredients: 250 g short-grain rice, 120 g sugar, 1 l milk with 3.5% fat content and 1.5 g salt
  - Heating up: Duration approx. 5 min. 30 sec., power level 8.5
  - Simmering: Power level 3, stir after 10 minutes

30.6 Cooking rice pudding without a lid

Milk temperature: 7 °C
1. Add the ingredients to the milk and heat the mixture up while stirring continuously.
2. Once the milk has reached approx. 90 °C, select the recommended power level and leave it to simmer on a low heat for approx. 50 minutes.

- 16 cm saucepan without lid, ingredients: 190 g short-grain rice, 90 g sugar, 750 ml milk with 3.5% fat content and 1 g salt
  - Heating up: Duration approx. 5 min. 30 sec., power level 8.5
  - Simmering: Power level 3
- 20 cm saucepan without lid, ingredients: 250 g short-grain rice, 120 g sugar, 1 l milk with 3.5% fat content and 1.5 g salt
  - Heating up: Duration approx. 5 min. 30 sec., power level 8.5
  - Simmering: Power level 2.5

30.7 Cooking rice

Recipe in accordance with DIN 44550
Water temperature: 20 °C

- 16 cm saucepan with lid, ingredients: 125 g long-grain rice, 300 g water and a pinch of salt
  - Heating up: Duration approx. 2 min. 30 sec., power level 9
  - Simmering: Power level 2
- 20 cm saucepan with lid, ingredients: 250g long-grain rice, 600 g water and a pinch of salt
  - Heating up: Duration approx. 2 min. 30 sec., power level 9
  - Simmering: Power level 2.5

30.8 Roasting a pork loin

Initial temperature of the loin: 7 °C

- 24 cm pan without lid, ingredients: 3 pork loins, total weight approx. 300 g, 1 cm thick, and 15 g sunflower oil
  - Heating up: Duration approx. 1 min. 30 sec., power level 9
  - Simmering: Power level 7

30.9 Preparing crêpes

Recipe in accordance with DIN EN 60350-2

- 24 cm pan without lid, ingredients: 55 ml batter per crêpe
  - Heating up: Duration 1 min. 30 sec., power level 9
  - Simmering: Power level 7

30.10 Deep-fat frying frozen chips

- Pot dia. 20 cm without lid: ingredients: 2 l sunflower oil. For each frying time: 200 g frozen chips, 1 cm thick.
  - Heating up: Power level 9, until the oil temperature reaches 180 °C.
  - Simmering: Power level 9

Thank you for buying a Bosch Home Appliance!

Register your new device on MyBosch now and profit directly from:

- **Expert tips & tricks for your appliance**
- **Warranty extension options**
- **Discounts for accessories & spare-parts**
- **Digital manual and all appliance data at hand**
- **Easy access to Bosch Home Appliances Service**

Free and easy registration – also on mobile phones:
www.bosch-home.com/welcome

Looking for help? You'll find it here.

Expert advice for your Bosch home appliances, help with problems or a repair from Bosch experts.
Find out everything about the many ways Bosch can support you:
www.bosch-home.com/service
Contact data of all countries are listed in the attached service directory.

BSH Hausgeräte GmbH
Carl-Wery-Straße 34
81739 München, GERMANY
www.bosch-home.com

A Bosch Company

9001725883 (020719)
en

Valid within Great Britain:
Imported to Great Britain by
BSH Home Appliances Ltd.
Grand Union House
Old Wolverton Road
Wolverton, Milton Keynes
MK12 5PT
United Kingdom