BOSCH

Register your new device on MyBosch now and get free benefits: **bosch-home.com/welcome**

MyBosch

Dishwasher

SMS6HCB01A

[aus] User manual

Table of contents

1 Safety 4
1.1 General information 4
1.2 Intended use 4
1.3 Restriction on user group 4
1.4 Safe installation 4
1.5 Safe use 6
1.6 Damaged appliance 7
1.7 Risk to children 8
1.8 Safety systems 9

2 Preventing material damage 10
2.1 Safe installation 10
2.2 Safe use 10

3 Childproof lock 10
3.1 Door lock 11

4 Environmental protection and saving energy 11
4.1 Disposing of packaging 11
4.2 Saving energy 11
4.3 AquaSensor 12
4.4 Sensors 12

5 Installation and connection 12
5.1 Scope of supply 12
5.2 Installing and connecting the appliance 13
5.3 Drainage connection 13
5.4 Drinking water connection 13
5.5 Electrical connection 13

6 Familiarising yourself with your appliance 15
6.1 Appliance 15
6.2 Controls 17

7 Programmes 19
7.1 Information for test institute 22
7.2 Favourite ☆ 22

8 Additional functions 22

9 Features 23
9.1 Top basket 23
9.2 Bottom basket 24
9.3 Cutlery basket 25
9.4 Cutlery drawer 25
9.5 Etagere 25
9.6 Folding prongs 25
9.7 Baking sheet spray head 26
9.8 Extra Clean Zone 26
9.9 Basket heights 27

10 Before using for the first time 28
10.1 Making settings for initial start-up 28

11 Rinse aid system 28
11.1 Rinse aid 28
11.2 Setting the amount of rinse aid 29
11.3 Switching the rinse aid system off 29

12 Detergent 29
12.1 Suitable detergents 29
12.2 Unsuitable detergents 31
12.3 Information on detergents 31
12.4 Adding detergent 31

13 Tableware 32
13.1 Damage to glass and tableware 32
13.2 Arrange tableware 33
13.3 Removing tableware 34

14 Basic operation 34
14.1 Opening appliance door 34
14.2 Switching on the appliance 34
14.3 Setting a programme 34
14.4 Setting additional functions 35
14.5 Setting timer programming 35
14.6 Starting the programme 35
14.7 Activating button lock 35

14.8 Deactivate button lock..... 35
14.9 Interrupting programme 35
14.10 Terminate programme..... 36
14.11 Switching off appliance 36

15 Basic settings..... 37
15.1 Overview of basic settings 37
15.2 Changing basic settings..... 39

16 Home Connect 39
16.1 Home Connect quick start 40
16.2 Home Connect settings..... 40
16.3 Remote Start Remote Start 40
16.4 Remote Diagnostics 41
16.5 Software update 41
16.6 Data protection..... 41

17 Cleaning and servicing..... 42
17.1 Cleaning the tub..... 42
17.2 Cleaning products..... 42
17.3 Tips on appliance care..... 42
17.4 Machine Care Machine Care 42
17.5 Filter system 43
17.6 Cleaning spray arms 44

18 Troubleshooting..... 46
18.1 Clean wastewater pump..... 58

19 Transportation, storage and disposal 58
19.1 Removing the appliance 58
19.2 Protect appliance from frost... 59
19.3 Transporting the appliance 59
19.4 Disposing of old appliance 59

20 Customer Service..... 60
20.1 Product number (E-Nr.), production number (FD) and consecutive numbering (Z-Nr.) 60
20.2 AQUA-STOP guarantee..... 60

21 Technical specifications..... 61
21.1 Information regarding Free and Open Source Software.... 61

22 Declaration of Conformity 61

1 Safety

Observe the following safety instructions.

1.1 General information

- Read this instruction manual carefully.
- Keep the instruction manual and the product information safe for future reference or for the next owner.
- Do not connect the appliance if it has been damaged in transit.

1.2 Intended use

Only use this appliance:
- For cleaning household tableware.
- In private households and in enclosed spaces in a domestic environment.
- Up to an altitude of 4000 m above sea level.

1.3 Restriction on user group

This appliance may be used by children aged 8 or over and by people who have reduced physical, sensory or mental abilities or inadequate experience and/or knowledge, provided that they are supervised or have been instructed on how to use the appliance safely and have understood the resulting dangers.
Do not let children play with the appliance.
Cleaning and user maintenance must not be performed by children unless they are being supervised.
Keep children under the age of 8 years away from the appliance and power cable.

1.4 Safe installation

⚠ WARNING – Risk of injury!
Improper installation may cause injury.
- ▸ When installing and connecting the appliance, follow the instructions in the manual and installation instructions.

⚠ WARNING – Risk of electric shock!

Incorrect installation is dangerous.

- Connect and operate the appliance only in accordance with the specifications on the rating plate.
- Always use the supplied power cable for the new appliance.
- Connect the appliance to a power supply with alternating current only via a properly installed socket with earthing.
- The protective conductor system of the domestic electrical installation must be properly installed.
- Never equip the appliance with an external switching device, e.g. a timer or remote control.
- When the appliance is installed, the mains plug of the power cord must be freely accessible. If free access is not possible, an all-pole isolating switch must be installed in the permanent electrical installation according to the installation regulations.
- When installing the appliance, check that the power cable is not trapped or damaged.

Cutting through the supply hose or immersing the Aqua-Stop valve in water is dangerous.

- Never immerse the plastic housing in water. The plastic housing on the supply hose contains an electric valve.
- Never cut through the supply hose. The supply hose contains electric power cables.

⚠ WARNING – Risk of fire!

It is dangerous to use an extended power cord and non-approved adapters.

- Do not use extension cables or multiple socket strips.
- If the power cord is too short, contact Customer Service.
- Only use adapters approved by the manufacturer.

⚠ WARNING – Risk of burns!

If the appliance is not installed properly, this may result in burns.

- With free-standing appliances, ensure that they are installed with the back panel against a wall.

1.5 Safe use

⚠ WARNING – Risk of serious harm to health!
Failure to comply with safety instructions and directions for use on packagings of detergent and rinse aid products may cause serious harm to health.
- Follow the safety instructions and directions for use on the packagings of detergent and rinse aid products.

⚠ WARNING – Risk of explosion!
Adding solvents to the interior of the appliance may cause explosions.
- Never add solvents to the interior of the appliance.

Highly caustic alkaline or highly acidic cleaning agents in conjunction with aluminium parts in the interior of the appliance may cause explosions.
- Never use highly caustic alkaline or highly acidic cleaning agents, in particular commercial or industrial products, in conjunction with aluminium parts (e.g. grease filters of extractor hoods or aluminium pans), e.g. for the Machine Care programme.

⚠ WARNING – Risk of injury!
Leaving the appliance door open may result in injury.
- Only open the appliance door to load or unload tableware in order to prevent accidents, e.g. through tripping.
- Do not sit or stand on the appliance door when open.

Knives and utensils with sharp points can cause injuries.
- Arrange knives and utensils with sharp points in the cutlery basket with the points downwards, on the knife shelf or in the cutlery drawer.

⚠ WARNING – Risk of scalding!
If you open the appliance door while the programme is running, hot water may splash out of the appliance.
- Open the appliance door carefully if the programme is still running.

⚠ WARNING – Risk of tipping!
Overfilling the Baskets may cause the appliance to tip up.
- Never overfill the Baskets with free-standing appliances.

⚠ WARNING – Risk of electric shock!
An ingress of moisture can cause an electric shock.
- Only use the appliance in enclosed spaces.
- Never expose the appliance to intense heat or humidity.
- Do not use steam- or high-pressure cleaners to clean the appliance.

If the insulation of the power cord is damaged, this is dangerous.
- Never let the power cord come into contact with hot appliance parts or heat sources.
- Never let the power cord come into contact with sharp points or edges.
- Never kink, crush or modify the power cord.

1.6 Damaged appliance

⚠ WARNING – Risk of electric shock!
If the appliance or the power cord is damaged, this is dangerous.
- Never operate a damaged appliance.
- Never operate an appliance with a cracked or fractured surface.
- Never pull on the power cord to unplug the appliance. Always unplug the appliance at the mains.
- If the appliance or the power cord is damaged, immediately unplug the power cord or switch off the fuse in the fuse box and turn off the water tap.
- Call customer services. → *Page 60*

Incorrect repairs are dangerous.
- Repairs to the appliance should only be carried out by trained specialist staff.
- Only use genuine spare parts when repairing the appliance.
- If the power cord of this appliance is damaged, it must be replaced with a special connection cable, which is available from the manufacturer or his Customer Service.

1.7 Risk to children

⚠ WARNING – Risk of suffocation!
Children may put packaging material over their heads or wrap themselves up in it and suffocate.
- ▸ Keep packaging material away from children.
- ▸ Do not let children play with packaging material.

Children may breathe in or swallow small parts, causing them to suffocate.
- ▸ Keep small parts away from children.
- ▸ Do not let children play with small parts.

Children may become trapped in the appliance and suffocate.
- ▸ Use the childproof lock if fitted.
- ▸ Never let children play with or operate the appliance.

⚠ WARNING – Risk of harm to health!
Children can lock themselves in the appliance, thereby putting their lives at risk.
- ▸ With redundant appliances, unplug the power cord. Then cut through the cord and damage the lock on the appliance door beyond repair so that the appliance door will no longer close.

⚠ WARNING – Risk of crushing!
With higher-level appliances, children can become crushed between the appliance door and cabinet doors underneath.
- ▸ Keep an eye on children when opening and closing the appliance door.

⚠ WARNING – Risk of chemical burns!
Rinse aid and detergent may cause chemical burns to the mouth, throat and eyes.
- ▸ Keep children away from detergent and rinse aid products.
- ▸ Keep children away from the appliance when open. The water in the interior of the dishwasher is not drinking water. It may contain residues of detergents and rinse aid.

⚠ **WARNING – Risk of injury!**
Children may get their fingers caught in the slots of the tablet collecting tray and injure themselves.
▸ Keep children away from the appliance when open.

1.8 Safety systems

Protect children from possible hazards resulting from the appliance.
The appliance is equipped with a Childproof lock → *Page 10*.

2 Preventing material damage

2.1 Safe installation

ATTENTION!
Improper installation of the appliance may cause damage.

- If the dishwasher is installed above or below other domestic appliances, follow the information on installation in combination with a dishwasher in the installation instructions for the individual appliances.
- If there is no information or if the installation instructions do not include the relevant information, contact the manufacturer of these appliances to check that the dishwasher can be installed above or below these appliances.
- If no information is available from the manufacturer, the dishwasher should not be installed above or below such appliances.
- To ensure the safe operation of all domestic appliances, continue following the installation instructions for the dishwasher.
- Do not install the dishwasher under a hob.
- Do not install the dishwasher near heat sources, e.g. radiators, heat storage tanks, ovens or other appliances that generate heat.

Modified or damaged water hoses may result in material damage and damage to the appliance.

- Never kink, crush, modify or cut through water hoses.
- Only use the water hoses supplied with the appliance or genuine spare hoses.
- Never re-use water hoses that have been used before.

If the water pressure is too high or too low, the appliance may not be able to operate properly.

- Make sure that the water pressure in the water supply system is min. 50 kPa (0.5 bar) and max. 1000 kPa (10 bar).
- If the water pressure exceeds the maximum value specified, a pressure-reducing valve must be installed between the drinking water connection and the hose set of the appliance.

2.2 Safe use

ATTENTION!
Escaping water vapour can damage fitted units.

- When the programme ends, leave the appliance to cool down for a while before opening the door.

Unsuitable cleaning agents may damage the appliance.

- Do not use a steam cleaner.
- So as not to scratch the finish on the appliance, do not use sponges with a rough surface or abrasive cleaning agents.
- To prevent corrosion, do not use sponge cloths on dishwashers with a stainless steel front or rinse such cloths thoroughly several times before using them for the first time.

3 Childproof lock

The childproof lock lets you protect children from possible hazards resulting from the appliance.
The appliance is equipped with a door lock.

3.1 Door lock

The door lock is a mechanical safety system and makes it more difficult to open the appliance door.
You can activate or deactivate the door lock.

⚠ **WARNING**
Risk of suffocation!
Children may become trapped in the appliance and thus suffocate.
- Activate the door lock and close the appliance door.

→ *"Opening appliance door", Page 34*

Activating the door lock

Note: The door lock remains activated until it is deactivated manually.

1. Open the appliance door.
2. Pull the catch of the childproof lock forwards ① and close the appliance door ②.

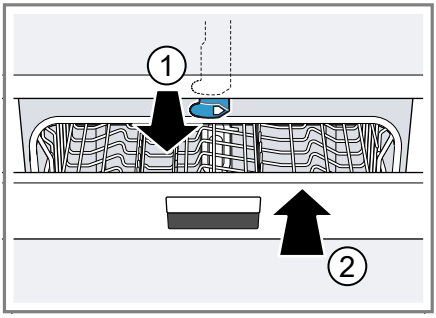

Deactivating the door lock

1. Open the appliance door.
2. Push the catch of the childproof lock to the right ① and slide it backwards ②.

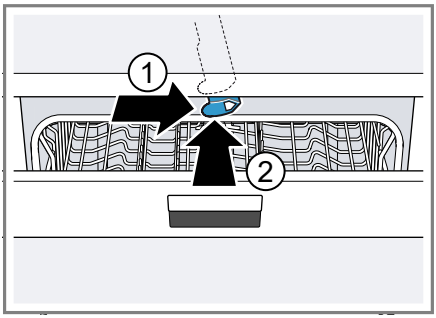

3. Close the appliance door.

4 Environmental protection and saving energy

4.1 Disposing of packaging

The packaging materials are environmentally compatible and can be recycled.
- Sort the individual components by type and dispose of them separately.

4.2 Saving energy

If you follow these instructions, your appliance will use less electricity and less water.

Use the Eco Wash programme.
- ✔ The Eco Wash programme is energy-efficient and environmentally friendly.
  → *"Programmes", Page 19*

Change the sensor setting to the default.
- ✔ Consumption is reduced.
  → *"Sensors", Page 12*

4.3 AquaSensor

The AquaSensor is an optical measuring device (light barrier) which measures the turbidity of the rinsing water. You can save water with the AquaSensor.
Use of the AquaSensor depends on the programme. If the soiling level is high, the rinsing water is drained off and replaced with fresh water. If the soiling level is lower, the rinsing water is used in the next wash cycle, so reducing water consumption by 3-6 litres. In the automatic programmes the temperature and run time are additionally adjusted to the level of soiling.

4.4 Sensors

The sensors adjust the programme sequence and strength in the automatic programmes depending on the level and type of soiling.
The sensor has different sensitivity settings that can be changed in the basic settings.

Sensor setting	Description
SE:00	Optimum setting for a mixed load and heavily soiled tableware. Saves both energy and water.
SE:01	Adjusts the programme strength for effective removal of food remnants even with low soiling levels. Energy and water consumption are adjusted accordingly.
SE:02	Adjusts the programme strength for difficult conditions of use, e.g. stubborn dried-on food remnants. Recommended setting when using organic or ecological detergents containing low levels of active agents. Energy and water consumption are adjusted accordingly.

5 Installation and connection

To ensure proper operation, connect the appliance to the power and water supply correctly. Observe the specified criteria and the installation instructions.

5.1 Scope of supply

After unpacking all parts, check for any damage in transit and completeness of the delivery.
If you have any complaints, contact the dealer who sold you the appliance or our Customer Service.

Note: The appliance has been tested at the factory to check it is in working order. It is possible that water has left marks on the appliance. These marks will disappear after the first wash cycle.

The delivery consists of the following:
- Dishwasher
- Operating instructions
- Installation Instructions
- Further information documents
- Installation material
- Mains cable

5.2 Installing and connecting the appliance

You can position your built-under or integrable appliance in a fitted kitchen between wooden and plastic walls. If you subsequently install your dishwasher as a free-standing appliance, you must stop it from tipping over, e.g. by screwing it to the wall or installing it under a continuous worktop that is securely connected to adjacent cabinets.

1. Follow the safety instructions. → *Page 4*
2. Follow the instructions for electrical connection.
3. Check the Scope of supply and the condition of the appliance.
4. Consult the installation instructions for the installation dimensions required.
5. Make the appliance level using the height-adjustable feet.

   Make sure that the appliance is standing on the floor securely.
6. Install the drainage connection. → *Page 13*
7. Install the drinking water connection. → *Page 13*
8. Connect the appliance to the power supply.

5.3 Drainage connection

Connect your appliance to drainage connection so dirty water is discharged via the wash cycle.

Installing the drainage connection

1. Consult the installation instructions supplied for the steps required here.
2. Connect the wastewater hose to the outlet connection of the siphon using the enclosed parts.
3. When doing so, check that the wastewater hose is not kinked, crushed or twisted.
4. Also check that there is no cover in the drainage system preventing the wastewater from being discharged.

5.4 Drinking water connection

Connect your appliance to a drinking water connection.

Installing the drinking water connection

Note

- If you are replacing the appliance, you must use a new water supply hose.

1. Consult the installation instructions supplied for the steps required here.
2. Connect the appliance to the drinking water connection using the enclosed parts.

   Observe the Technical data.
3. When doing so, check that the drinking water connection is not kinked, crushed or twisted.

5.5 Electrical connection

Connect your appliance to the power supply.

Connecting the appliance to the electricity supply

Notes

- Follow the Safety instructions → *Page 4*.
- Please note that the water safety system is only functional if there is a power supply.

1. Insert the non-heating appliance plug of the power cable into the appliance.

2. Insert the mains plug of the appliance into a nearby socket.

   The connection data for the appliance can be found on the rating plate.
3. Check that the mains plug is inserted properly.

6 Familiarising yourself with your appliance

6.1 Appliance

You can find an overview of the parts of your appliance here.

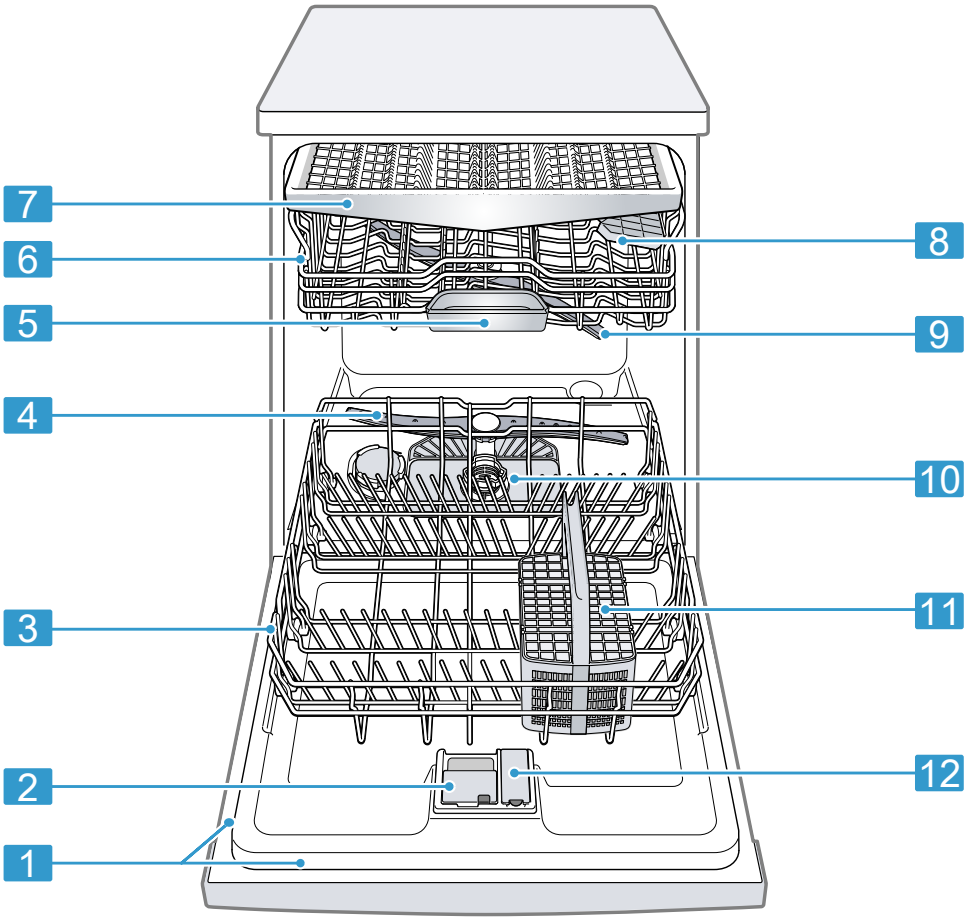

1	Rating plate	Rating plate with E number and FD number → *Page 60*. The data you need for Customer Service → *Page 60*.

[1] Depending on the appliance specifications

2	Detergent dispenser	Detergent → *Page 29* is added to the detergent dispenser.
3	Bottom basket	Bottom basket → *Page 24*
4	Lower spray arm	The lower spray arm washes the tableware in the bottom basket. If the tableware has not been washed properly, clean the spray arms. → *"Cleaning spray arms", Page 44*
5	Tablet collecting tray	During the wash cycle tablets automatically fall out of the detergent dispenser into the tablet collecting tray where they can fully dissolve.
6	Top basket	Top basket → *Page 23*
7	Cutlery drawer	Cutlery drawer → *Page 25*
8	Cutlery shelf[1]	Cutlery shelf → *Page 25*
9	Upper spray arm	The upper spray arm washes the tableware in the top basket. If the tableware has not been washed properly, clean the spray arms. → *"Cleaning spray arms", Page 44*
10	Filter system	Filter system → *Page 43*
11	Cutlery basket	Cutlery basket → *Page 25*
12	Dispenser for rinse aid	Add rinse aid to the dispenser for rinse aid. → *"Rinse aid system", Page 28*

[1] Depending on the appliance specifications

6.2 Controls

You can use the control panel to configure all functions of your appliance and to obtain information about the operating status.
With some buttons you can perform different functions.

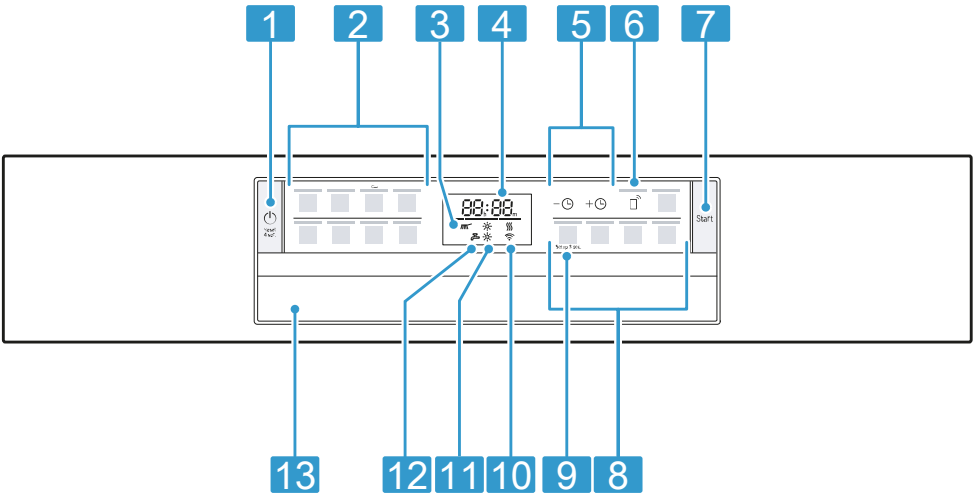

1	ON/OFF button ⏻ and reset button Reset 4 sec.	Switching on the appliance → *Page 34* Switching off the appliance → *Page 36* Terminating the programme → *Page 36*
2	Programme buttons	Programmes
3	Programme sequence display	The programme sequence display shows the current cycle of the appliance, e.g. washing, rinsing or drying.
4	Display	The display shows information about progress of the programme, the remaining running time or the basic settings. You can change the basic settings via the display and the setting buttons. → *"Changing basic settings", Page 39*
5	Timer programming and setting buttons	Setting timer programming → *Page 35* Changing basic settings → *Page 39*

[1] Depending on the appliance specifications

6	Remote Start Remote Start	→ *"Remote Start Remote Start", Page 40*
7	Start button Start	Starting the programme → *Page 35*
8	Programme buttons and additional functions	Programmes Additional functions → *Page 22*
9	Setup 3 sec. button	If you press Setup 3 sec. for approx. 3 seconds, you can open the basic settings. → *"Changing basic settings", Page 39*
10	WLAN display	Home Connect → *Page 39*
11	Rinse aid refill indicator	Rinse aid system → *"Adding rinse aid", Page 28*
12	Water supply display	Display for water supply
13	Door handle[1]	Open the appliance door. → *Page 34*

[1] Depending on the appliance specifications

7 Programmes

You can find an overview of the programmes that can be selected here. Different programmes, which can be found on the control panel of your appliance, are available depending on the appliance configuration.
The running time may vary depending on the programme selected. The running time depends on the water temperature, the quantity of tableware, the level of soiling and the Additional function → *Page 22* selected. The running time will change if the rinse aid system is switched off or rinse aid needs to be added.
The programme data is based on values measured in the laboratory according to AS/NZS 2007. Different influencing factors such as water temperature or pipe pressure may result in deviations.

Programme	**Consumption values** **1) Duration in hrs:mins** **2) Energy consumption in kWh** **3) Water consumption in litres**	**Use**	**Programme sequence**
Pots/ Pans Pots / Pans	■ 1) 2:05 - 2:15 ■ 2) 1,300 - 1,400 ■ 3) 11,5 - 14,0	Tableware: ■ Pots and pans, non-fragile tableware and cutlery Level of soiling: ■ Stubborn burned or dried-on food remnants containing starch and protein	Intensive: ■ Pre-Rinse ■ Cleaning 70 °C ■ Intermediate rinse ■ Final rinse 69 °C ■ Dry

Programme	Consumption values 1) Duration in hrs:mins 2) Energy consumption in kWh 3) Water consumption in litres	Use	Programme sequence
Auto Gentle Auto Gentle	■ 1) 1:30 - 1:40 ■ 2) 0,700 - 0,850 ■ 3) 11,5 - 14,0	Tableware: ■ Delicate tableware, cutlery, temperature-sensitive plastics, glasses and stemware in the stemware basket Level of soiling: ■ Lightly adhering fresh food remnants	Sensor-controlled: ■ Optimised by sensors depending on the soiling level of the washing water
Auto Wash Auto Wash	■ 1) 2:00 - 3:10 ■ 2) 0,980 - 1,550 ■ 3) 7,6 - 15,4	Tableware: ■ Mixed tableware and cutlery Level of soiling: ■ Common household food remnants lightly dried on	Sensor-controlled: ■ Optimised by sensors depending on the soiling level of the washing water
Eco Wash Eco Wash	■ 1) 3:15 ■ 2) 0,650 ■ 3) 11,0	Tableware: ■ Mixed tableware and cutlery Level of soiling: ■ Normally soiled load	Most economical programme: ■ Pre-Rinse ■ Cleaning 45 °C ■ Intermediate rinse ■ Final rinse 46 °C ■ Drying

Programme	Consumption values 1) Duration in hrs:mins 2) Energy consumption in kWh 3) Water consumption in litres	Use	Programme sequence
Extra Quiet Extra Quiet	■ 1) 4:00 ■ 2) 1,050 ■ 3) 11,0	Tableware: ■ Mixed tableware and cutlery Level of soiling: ■ Common household food remnants lightly dried on	Reduced noise: ■ Pre-Rinse ■ Cleaning 50 °C ■ Intermediate rinse ■ Final rinse 63 °C ■ Dry
Quick 1h Quick 1h	■ 1) 1:00 ■ 2) 1,300 ■ 3) 10,5	Tableware: ■ Mixed tableware and cutlery Level of soiling: ■ Common household food remnants lightly dried on	Time-optimised: ■ Cleaning 65 °C ■ Intermediate rinse ■ Final rinse 69 °C ■ Dry
Express Wash Express Wash	■ 1) 0:29 ■ 2) 0,800 ■ 3) 10,5	Tableware: ■ Delicate tableware, cutlery, temperature-sensitive plastics and glasses Level of soiling: ■ Lightly adhering fresh food remnants	Time-optimised: ■ Cleaning 45 °C ■ Intermediate rinse ■ Final rinse 55 °C
Machine Care Machine Care	■ 1) 2:10 ■ 2) 1,350 ■ 3) 15,2	Use only if appliance is unloaded.	Machine Care 70 °C
☆ Favourite	■ 1) 0:15 - 0:15 ■ 2) 0,050 - 0,050 ■ 3) 4,0 - 4,0	-	-

7.1 Information for test institute

Test institutes can request the conditions for comparison tests, e.g. according to AS/NZS2007, by sending an e-mail to dishwasher@test-appliances.com.
These are the conditions for conducting the tests, however not the results or consumption values.
The product number (E-Nr.) and the production number (FD) are required here. They can be found on the rating plate on the appliance door.
Open ajar using a block of approximately 100 mm upon completion of dry test.

7.2 Favourite ☆

You can save a combination of a programme and an additional function to the ☆ button.
You can save the program via the Home Connect app or on the appliance.
The pre-rinse program is saved to this button at the factory. Pre-rinse is suitable for all types of tableware.
The tableware undergoes intermediate cleaning via cold rinsing.
When programmes have been downloaded and on delivery of the appliance, the name of the programme will be displayed in the app. The display alternately shows "AP:P" and the remaining running time.

Tip: You can use the Home Connect app to download additional programmes and save them to the ☆ button.[1]

Save Favourite☆ on the appliance.

1. Press ⏻.
2. Press the right programme button.
3. Press the button for the relevant additional function.
   → *"Additional functions", Page 22*
4. Press ☆ for 3 seconds.

✔ The selected programme and the additional function will flash.
✔ ☆ flashes.
✔ The programme and the additional function are saved.

Tip: To reset the programme, either use the Home Connect app or reset your appliance back to the factory settings.
→ *"Overview of basic settings", Page 37*

8 Additional functions

You can find an overview of the additional functions that can be selected here. Different additional functions, which can be found on the control panel of your appliance, are available depending on the appliance configuration.

Additional function	Use
Speed Perfect SpeedPerfect	■ The run time is shortened by 15% to 75% depending on the rinse programme. ■ The additional function can be activated before the start of the programme and at any time when the programme is running.

[1] Depending on the appliance specifications

Additional function	Use
	■ Energy and water consumption are increased.
Hygiene Plus HygienePlus	■ To ensure a higher hygiene status for the appliance and tableware, the temperature is raised and maintained for an extra-long period. ■ Especially suitable for cleaning chopping boards or baby bottles. ■ Continuous use of this function increases the hygiene status. ■ This will increase the run time and energy consumption.
Extra Dry Extra Dry	■ For a better drying result the final rinse temperature is increased and the drying phase extended. ■ Especially suitable for drying plastic parts. ■ There is a slight increase in energy consumption and the run time is extended.

9 Features

You can find an overview of the possible features of your appliance and how to use them here.
These features depend on the model of your appliance.

9.1 Top basket

Arrange cups, glasses and small items of tableware in the top basket.

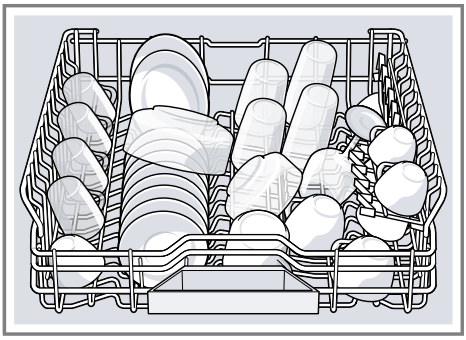

You can adjust the height of the top basket to make room for larger items of tableware.

Adjusting top basket with side levers

To wash large items of tableware in the baskets, adjust the shelf position of the top basket.

1. Pull out the top basket.
2. To prevent the basket from suddenly dropping down, hold the side of the basket by the top edge.

3. Press in the levers on the right and left on the outside of the basket.

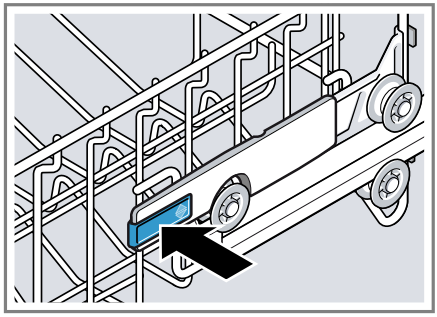

4. Raise or lower the basket evenly to the right level.

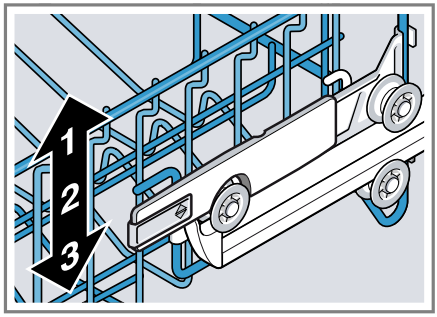

Check that the basket is level on both sides.

5. Release the levers.

✔ The basket clicks into position.

6. Slide the basket back in.

9.2 Bottom basket

Arrange pans and plates in the bottom basket.

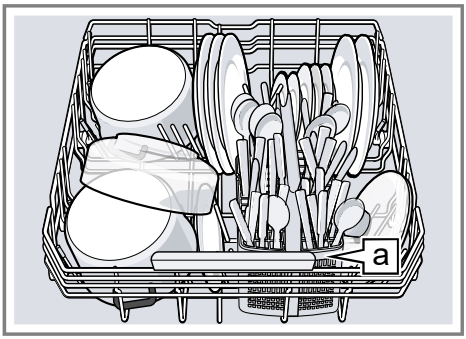

Cutlery basket a[1]

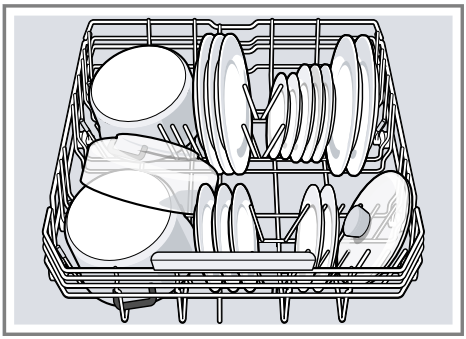

Large plates up to a diameter of 31 cm can be arranged in the bottom basket as shown.

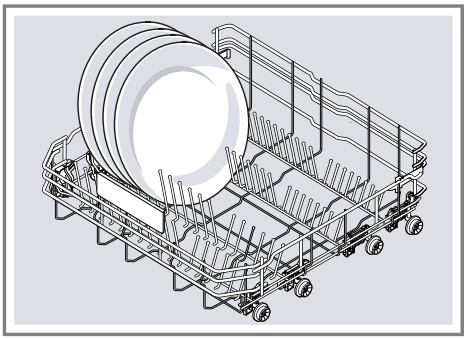

[1] Depending on the appliance specifications

9.3 Cutlery basket

Arrange cutlery in the cutlery basket, always without sorting it and with the sharp points downwards.

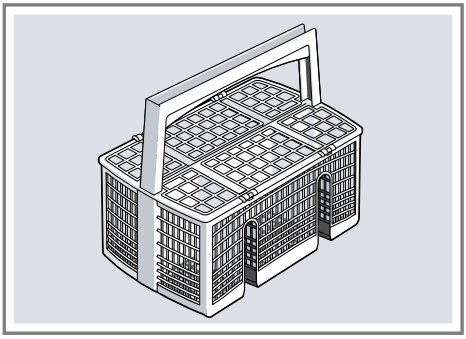

9.4 Cutlery drawer

Arrange cutlery in the cutlery drawer.

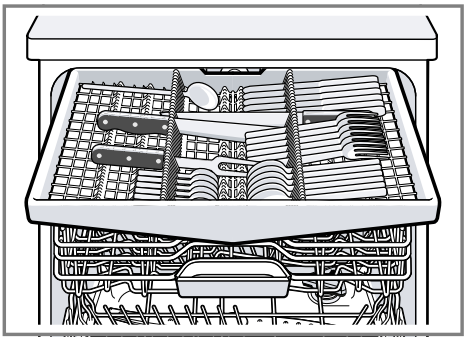

Arrange cutlery with the points and sharp edges downwards.

9.5 Etagere

Use the cutlery shelf and space underneath for small cups and glasses or for large items of cutlery, e.g. cooking spoons or serving cutlery.

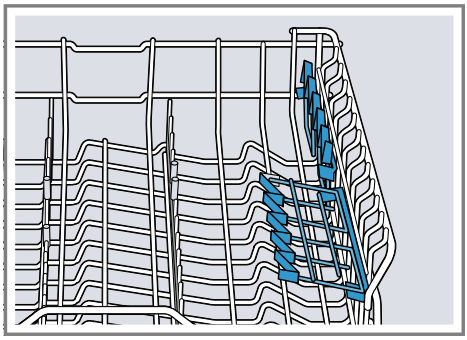

If you do not need the cutlery shelf, you can fold it up.

9.6 Folding prongs

Use the folding prongs to position tableware securely, e.g. plates.

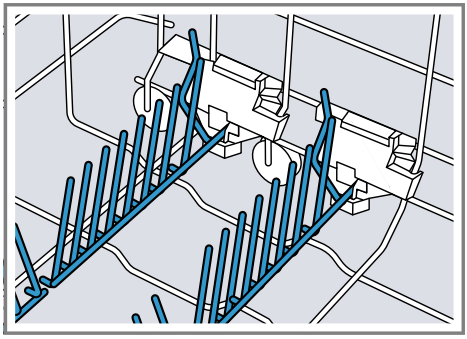

You can fold the prongs down to position pans, bowls and glasses better.[1]

Folding down prongs[1]

If you do not need the prongs, fold them down.

[1] Depending on the appliance specifications

1. Push the lever forwards ① and fold down the prongs ②.

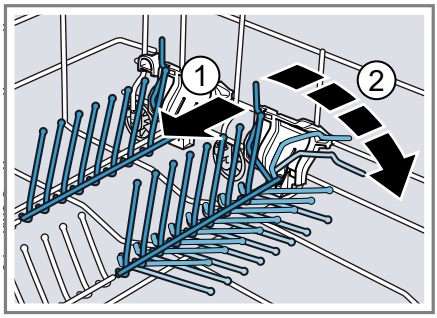

2. To use the prongs again, fold them back up.

✔ The prongs audibly click into position.

9.7 Baking sheet spray head

Use the baking sheet spray head to clean large items of tableware, e.g. trays, grilles and plates.

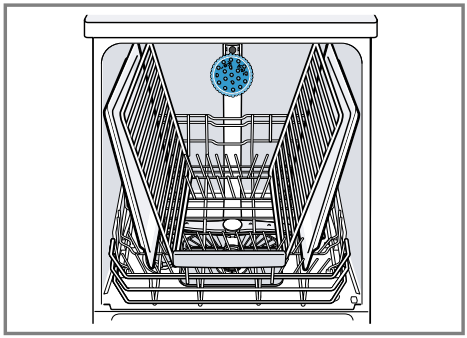

Arrange max. 2 baking sheets and 2 grilles as shown to ensure that the spray jet can reach all parts.

Note: Check that the appliance is always operated with the top basket or the baking sheet spray head.

Inserting baking sheet spray head

Use the baking sheet spray head instead of the top basket to clean large trays, grilles and plates.

1. Remove top basket.
2. Insert the baking sheet spray head in the holder ① and turn to the right ②.

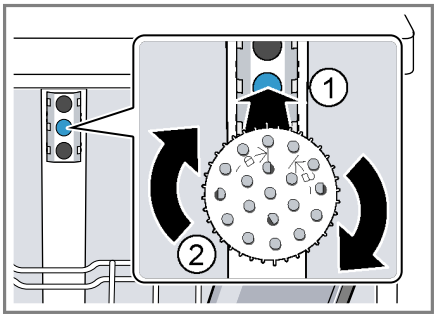

✔ The baking sheet spray head clicks into position.

Removing baking sheet spray head

If you no longer require the baking sheet spray head, remove it from the appliance.

1. Turn the baking sheet spray head anticlockwise and remove from the holder.
2. Insert the top basket in the appliance.

9.8 Extra Clean Zone

Use the Extra Clean Zone in the top basket to clean soiled tableware thoroughly, e.g. muesli bowls.

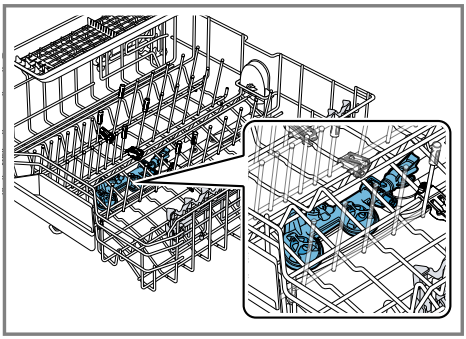

Selecting Extra Clean Zone

Note: Consumption will increase if you operate your appliance with the Extra Clean Zone switched on.

1. Pull out the top basket.
2. Set the slider to ON or OFF.

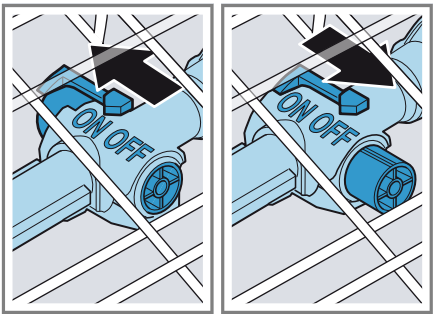

3. Push in the top basket.

Cleaning Extra Clean Zone

Limescale and soiling from the dish-washing water can block the nozzles.

Note: Always operate the appliance with the Extra Clean Zone fitted.

1. Pull out the top basket.
2. Pull the tab on the Extra Clean Zone up ① and forwards ②.

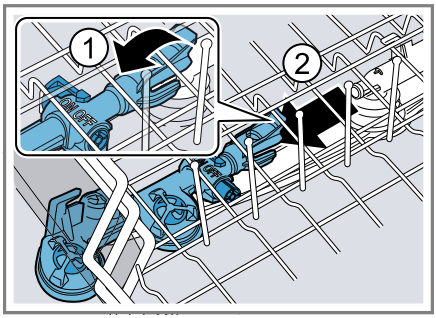

3. Set the slider to ON.
4. Clean under running water.
5. Place the Extra Clean Zone in the top basket and lock in place ①.

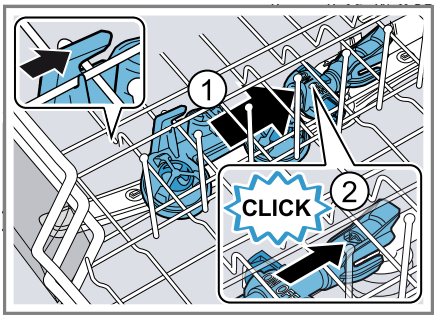

Check that the mounts are in the correct position.

✔ The Extra Clean Zone audibly clicks into position ②.

6. Push in the top basket.

9.9 Basket heights

Set the baskets at the right height.

Appliance height 81.5 cm with cutlery basket

Level	Top basket	Bottom basket
1 max. ø	22 cm	30 cm/31 cm → *Page 24*
2 max. ø	24.5 cm	27.5 cm
3 max. ø	27 cm	25 cm

Appliance height 81.5 cm with cutlery drawer

Level	Top basket	Bottom basket
1 max. ø	16 cm	30 cm/31 cm → *Page 24*
2 max. ø	18.5 cm	27.5 cm
3 max. ø	21 cm	25 cm

10 Before using for the first time

10.1 Making settings for initial start-up

On initial start-up or after a reset to the factory settings, you will need to make settings.

Tip: Connect your appliance to a mobile device. You can conveniently change all settings via the Home Connect app.
→ *"Home Connect quick start", Page 40*

Requirement: The appliance has been installed and connected.
→ *Page 12*

1. Add rinse aid. → *Page 28*
2. Switch on the appliance. → *Page 34*
3. Set the amount of rinse aid to be dispensed. → *Page 29*
4. Add detergent → *Page 29*.
5. Start the Programme with the highest cleaning temperature → *Page 19* without tableware.

   To remove any marks from water or other residues, we recommend you operate the appliance without tableware before using it for the first time.

Tip: You can change this setting and other Basic settings → *Page 37* at any time again.

11 Rinse aid system

11.1 Rinse aid

For optimum drying results, use rinse aid.
Only use rinse aid for domestic dishwashers.

Adding rinse aid

If the rinse aid refill indicator lights up, top up with rinse aid. Only use rinse aid for domestic dishwashers.

1. Press the catch on the lid of the dispenser for rinse aid ① and lift ② .

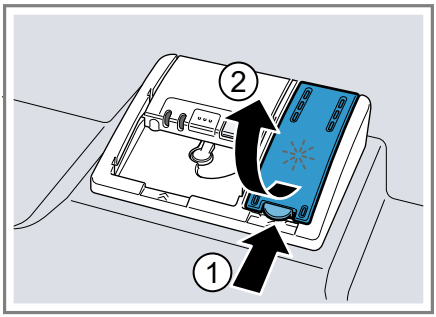

2. Add rinse aid up to the max mark.

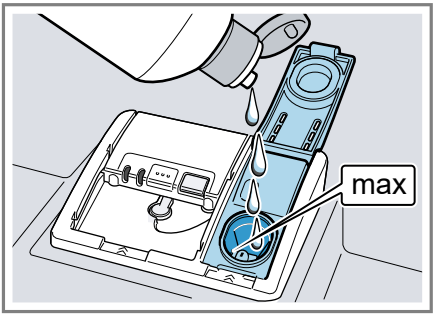

3. If rinse aid spills out, remove it from the tub.

   Spilled rinse aid can cause excessive frothing during the wash cycle.
4. Close the lid of the dispenser for rinse aid.
✔ The lid clicks into position.

11.2 Setting the amount of rinse aid

If there are streaks or water marks on tableware, change the amount of rinse aid.

1. Press ⏻.
2. To open the basic settings, press Setup 3 sec. for 3 seconds.
✔ The display shows set.
3. Press Setup 3 sec. repeatedly until the display shows the value set at the factory r:05.
4. Press — or + repeatedly until the right amount of rinse aid has been set.
   – A low setting adds less rinse aid during the wash cycle and reduces streaking on tableware.
   – A higher setting adds more rinse aid during the wash cycle, reduces water marks and improves the drying result.
5. To save the settings, press Setup 3 sec. for 3 seconds.

11.3 Switching the rinse aid system off

If you find the rinse aid refill indicator irritating, e.g. when using combined detergents with a rinse aid component, you can switch the rinse aid system off.

Tip: The function of rinse aid is limited with combined detergents. You will generally get better results using rinse aid.

1. Press ⏻.
2. To open the basic settings, press Setup 3 sec. for 3 seconds.
✔ The display shows set.
3. Press Setup 3 sec. repeatedly until the display shows the value set at the factory r:05.
4. Press — or + repeatedly until the display shows r:00.
5. To save the settings, press Setup 3 sec. for 3 seconds.
✔ The rinse aid system is switched off and the rinse aid refill indicator is deactivated.

12 Detergent

12.1 Suitable detergents

Only use detergents that are suitable for dishwashers. Both separate and combined detergents are suitable. For optimum washing and drying results, use separate detergent together with Rinse aid → *Page 28*.
Modern, powerful detergents mainly use a low-alkaline formulation with enzymes. Enzymes break down starch and remove protein. Oxygen-

based bleaching agents are generally used to remove coloured stains, e.g. tea or ketchup.

Note: Follow the manufacturer's instructions for each detergent.

Detergent	Description
Tabs	Tabs are suitable for all cleaning functions and do not need to be measured out. With shorter Programmes → *Page 19* tabs sometimes do not dissolve entirely and leave residues of detergent. This may impair the cleaning effect.
Powder detergent	Powder detergent is recommended for shorter Programmes → *Page 19*. The dosage can be adjusted to the level of soiling.
Liquid detergent	Liquid detergent works faster and is recommended for shorter Programmes → *Page 19* without PreRinse. Sometimes liquid detergent may leak out despite the detergent dispenser being closed. This is not a fault and is non-critical if you remember the following: ■ Only choose a programme without PreRinse. ■ Do not select timer programming for starting the programme. The dosage can be adjusted to the level of soiling.

Tip: Suitable detergents are available online via our website or from Customer Service → *Page 60*.

Separate detergents

Separate detergents are products that do not contain components other than detergent, e.g. powder or liquid detergent.
With powder and liquid detergent the dosage can be individually adjusted to the level of soiling of the tableware.
For better washing and drying results, please also use Rinse aid → *Page 28*.

Combined detergents

Besides conventional separate detergents, a number of products are available with additional functions. These products not only contain detergent, but also rinse aid and salt replacement substances (3in1) and, depending on the combination (4in1, 5in1,...), additional components such as glass protection or stainless steel cleaner.

Note: Follow the manufacturer's instructions for each detergent.

If you are using combined detergent, the washing programme is adjusted automatically to ensure the best possible washing and drying result.

12.2 Unsuitable detergents

Do not use detergent which could cause damage to the appliance or present a risk to health.

Detergent	Description
Hand washing-up liquid	Hand washing-up liquid can cause increased frothing and damage the appliance.
Detergent containing chlorine	Chlorine residue on tableware may present a risk to health.

12.3 Information on detergents

Follow the instructions on detergents in everyday use.

- Detergents marked as "organic" or "ecological" (environmentally friendly) generally contain lower levels of active agents or completely dispense with certain substances. The cleaning effect may be restricted here.
- Set the rinse aid system to the separate or combined detergent in use.
- Follow the manufacturer's instructions for each detergent.
- To prevent sticking, only touch detergents in a water-soluble pouch with dry hands and only ever place them in a dry detergent dispenser.
- Even if the rinse aid refill indicator lights up, washing programmes will still run properly with combined detergents.
- The function of rinse aid is limited with combined detergents. You will generally get better results using rinse aid.
- Use tablets with a special drying performance.

12.4 Adding detergent

1. To open the detergent dispenser, press the locking latch.
2. Add the detergent to the dry detergent dispenser.

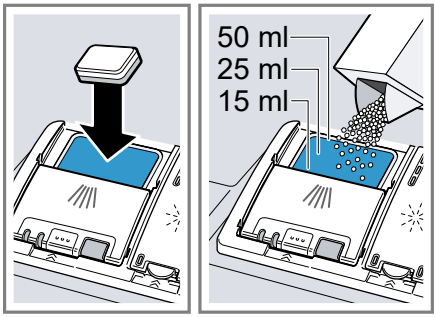

If you are using tablets, one is enough. Insert the tablets in a horizontal position.
If you are using powder or liquid detergent, follow the manufacturer's instructions and quantities for dosage in the detergent dispenser.
20 ml – 25 ml detergent is sufficient for normal soiling. If tableware is only lightly soiled, slightly less than the amount of detergent specified is usually sufficient.

3. Close the lid of the detergent dispenser.

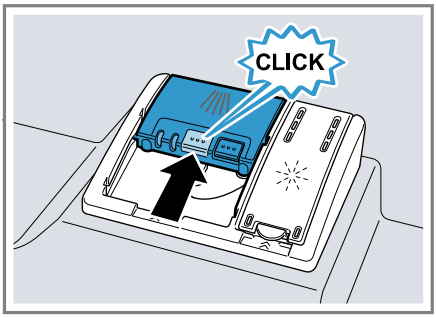

✔ The lid clicks into position.
✔ The detergent dispenser will open automatically at the optimum time during the programme. Powder or liquid detergent will spread around the washing tank and dissolve there. Tablets will fall into the tablet collecting tray and dissolve in the right dosage. In order to ensure that tablets can dissolve evenly, do not place any other objects in the tablet collecting tray.

Tip: If you use powder detergent and select a program with pre-rinse, you can also add a little detergent to the interior door of the appliance.

13 Tableware

Only clean tableware that is suitable for dishwashers.

Note: Decorated glassware and parts made of aluminium or silver may fade or discolour with dishwashing. Delicate types of glass may turn cloudy after a few washing cycles.

13.1 Damage to glass and tableware

Only put glasses and china in the dishwasher if it is marked as dishwasher-safe by the manufacturer. Avoid damage to glass and tableware.

Cause	Recommendation
The following tableware is not dishwasher-safe: ■ Items of cutlery and tableware made from wood ■ Decorated glassware, antique and hand-crafted tableware ■ Plastic parts not resistant to heat ■ Tableware made from copper or tin ■ Tableware soiled with ash, wax, lubricating grease or paint ■ Very small items of tableware	Only put tableware in the dishwasher if it is marked as dishwasher-safe by the manufacturer.
The chemical composition of detergent causes damage.	Use a detergent marked by the manufacturer as gentle on tableware.

Cause	Recommendation
Highly caustic alkaline or highly acidic cleaning solutions, in particular commercial or industrial cleaners, are not safe to use in the dishwasher with aluminium.	If you are using highly caustic alkaline or highly acidic cleaning agents, in particular commercial or industrial cleaning agents, do not put aluminium parts in the dishwasher interior.
The water temperature of the programme is too high.	Select a programme with lower temperatures. After the programme has ended, take glassware and cutlery out of the appliance without delay.

13.2 Arrange tableware

Arrange tableware correctly to optimise the dishwashing result and prevent damage to both the appliance and tableware.

Tips

- Using the appliance allows you to save energy and water compared to washing-up by hand.
- See our website for examples of how to load your appliance efficiently, free of charge.
- To save energy and water, load the machine with the number of place settings specified (standard load with tableware and cutlery).
- For better washing and drying results, position items with curves or recesses at an angle so water can run off.

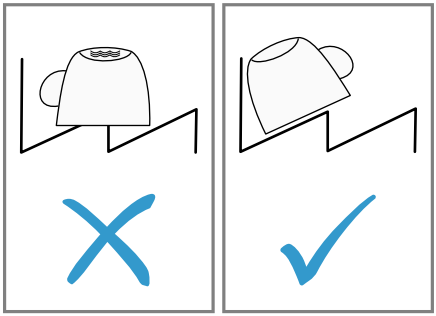

1. Remove large remnants of food from tableware.

   To save resources, do not prerinse tableware under running water.
2. Observe the following when arranging tableware:
   - Put heavily soiled tableware in the bottom basket, e.g. pans. The more powerful the spray jet, the better the dishwashing result will be.
   - To prevent damage to tableware, arrange it so it is stable and cannot tip over.
   - To prevent injury, arrange cutlery with the points and sharp edges facing down.
   - Position containers with the openings facing down so no water can collect in them.
   - Do not block the spray arms - make sure that they can turn freely.
   - Do not place small parts in the tablet collecting tray and do not block it with tableware so as not to obstruct the lid of the detergent dispenser.

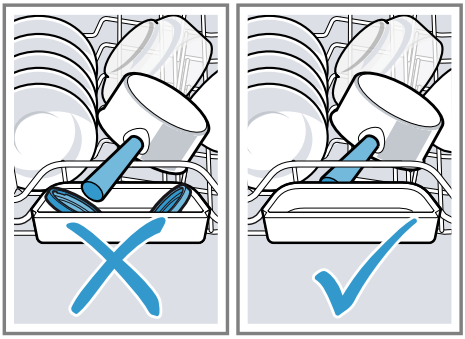

13.3 Removing tableware

⚠ **WARNING**
Risk of injury!
Hot tableware can cause burns to the skin. When hot, tableware is sensitive to shock, may crack and can result in injury.

- When the programme has ended, do not empty the appliance until the tableware has cooled down for a while.

1. To prevent water dripping on the tableware, unload it starting at the bottom and working up.
2. Check the washing tank and accessories for soiling and clean if necessary.
   → *"Cleaning and servicing", Page 42*

14 Basic operation

14.1 Opening appliance door

1. If the childproof lock is not activated, open the appliance door.
2. If the childproof lock is activated, press the catch of the lock to the right ① and open the appliance door ②.

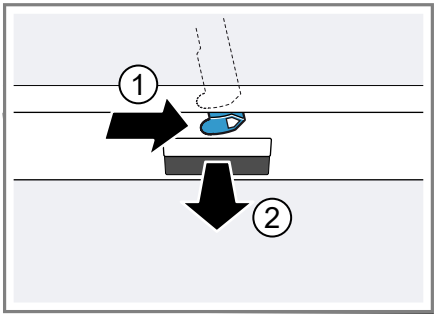

14.2 Switching on the appliance

- Press ⏻.

  The programme last selected and the additional function last selected will be set by default.
  If you do not perform any actions on the appliance for 10 minutes, the appliance will automatically switch off.

14.3 Setting a programme

To adjust the wash cycle to the soiling level of the tableware, select a suitable programme.

- Press the right programme button.
- ✔ The programme is set and the programme button flashes.
- ✔ The remaining running time of the programme appears on the display.

14.4 Setting additional functions

You can set additional functions to complete the washing programme selected.

Note: The additional functions which can be used depend on the programme selected.

- Press the button for the relevant additional function.
  → *"Additional functions", Page 22*
- ✔ The additional function is set and the additional function button flashes.

14.5 Setting timer programming

You can delay the start of the programme by up to 24 hours.

1. Press − Start in hr. or + Start in hr..
- ✔ "00h:01m" appears on the display.
2. Use − Start in hr. or + Start in hr. to set the required start time for the programme.
3. Press Start.
- ✔ This activates time preselection.

Tip: To deactivate timer programming, press − Start in hr. or + Start in hr. repeatedly until "00h:00m" appears in the display.

14.6 Starting the programme

- Press Start.
- ✔ The programme has ended when the display shows "00h:00m".

Notes

- If you want to add more tableware while the appliance is running, do not use the tablet collecting tray as a handle for the top basket. You might touch the partially dissolved tablet.
- You can only change a programme when running if you cancel it.
  → *"Terminate programme", Page 36*
- The appliance switches off automatically 1 minute after the end of the programme to save energy. If you open the appliance door immediately after the programme has ended, the appliance will switch off after 4 seconds.

Tip: To assist the drying, we recommend that the door will be partially opened after the cycle.

14.7 Activating button lock

The button lock prevents the appliance from being operated accidentally or incorrectly while running.

- Press ⚿ for approx. 3 seconds.
- ✔ The button lock is activated and will be automatically deactivated at the end of the programme.
- ✔ The display shows "CL" when the appliance is running.
- ✔ The button lock remains activated with a power failure.

14.8 Deactivate button lock

- Press ⚿ for approx. 3 seconds.

14.9 Interrupting programme

Note: When you open the appliance door once the appliance has heated up, leave the door slightly ajar for a few minutes and then close it. This will help prevent excess pressure building up in the appliance and stop the appliance door bursting open.

1. Press ⏻.
- ✔ The programme is saved and the appliance switches off.

2. Press ⏻ to resume the programme.

14.10 Terminate programme

To end a programme early or to switch from a programme that has already started, you will need to cancel it first.

- ▸ Press Reset 4 sec. for approx. 4 seconds.
- ✔ All displays light up.
- ✔ As soon as the displays are off, the display shows "00h:01m" and the residual water is pumped out.
- ✔ The programme is cancelled and ends after approx. 1 minute.

14.11 Switching off appliance

1. Please note the information on Safe use → *Page 10*.
2. Press ⏻.

Tip: If you press ⏻ during the wash cycle, the programme currently running will be interrupted. When you switch the appliance back on, the programme continues automatically.

15 Basic settings

You can configure the basic settings for your appliance to meet your needs.

15.1 Overview of basic settings

The basic settings depend on the features of your appliance.

Basic setting	Display text	Selection	Description
Rinse aid dispensing	r:05 [1]	r:00 - r:06	Set the amount of rinse aid to be dispensed. → *"Setting the amount of rinse aid", Page 29* Switch the rinse aid system off with level r:00.
Sensor setting	SE:00 [1]	SE:00 - SE:02	Set the water sensor for identifying soiling. → *"Sensors", Page 12*
Extra Dry	d:00 [1]	d:00 - d:01	The temperature is increased during the final rinse, which improves the drying result. This may increase the run time slightly. **Note:** Not suitable for delicate items of tableware. Switch Extra Dry on "d:01" or off "d:00".
Hot water	A:00 [1]	A:00 - A:01	Set cold water or hot water connection. Only set the appliance to hot water if this can be prepared with little energy and a suitable installation is available, e.g. solar heating system with circulation line. The water temperature should be at least 40 °C and max. 60 °C. Switch hot water on "A:01" or off "A:00".

[1] Factory setting (may vary according to model)

Basic setting	Display text	Selection	Description
Start programme	SP:00 [1]	SP:00 - SP:01	Set a default programme for when the appliance is switched on. ■ With the setting "SP:00", the last programme selected and the last additional function selected are set by default when the appliance is switched on. ■ With the setting "SP:01", the standard programme is set by default when the appliance is switched on.
Tone volume	SL:02 [1]	SL:00 -SL:03	Adjustment of tone volume. Level "SL:00" switches the signal tone off.
Button volume	bL:02 [1]	bL:00 - bL:03	Set the button volume during operation. Level "bL:00" switches the button tones off.
Wi-Fi	Cn:00	Cn:00 - Cn:01	Switch the wireless network connection on or off. Level "Cn:00" switches the wireless network connection off. The basic setting "Wi-Fi" is only available once the appliance is connected to the Home Connect app. → *"Home Connect ", Page 39*

[1] Factory setting (may vary according to model)

Basic setting	Display text	Selection	Description
Remote Start	rc:01	rc:00 - rc:02	Activate or deactivate → *"Remote Start Remote Start", Page 40*. The following settings are possible: ■ With the setting "rc:00", the function is permanently deactivated. ■ With the setting "rc:01", the function can be selected via the Remote Start button. → *"Activating Remote Start Remote Start", Page 41* ■ With the setting "rc:02", the function is permanently activated. This basic setting is not available until after you have connected the device with the Home Connect app. → *"Home Connect ", Page 39*
Factory setting	rE:	Start with + Y:ES Confirm with +	Restore changed settings to the factory settings. The settings for initial start-up must be configured.

[1] Factory setting (may vary according to model)

15.2 Changing basic settings

1. Press ⏻.
2. To open the basic settings, press Setup 3 sec. for 3 seconds.

✔ The display shows set.

3. Press Setup 3 sec. repeatedly until the display shows the required setting.
4. Press − or + repeatedly until the display shows the right value.

   You can change several settings.
5. To save the settings, press Setup 3 sec. for 3 seconds.

16 Home Connect

This appliance is network-capable. Connect your appliance to a mobile device to control its functions via the Home Connect app.
The Home Connect services are not available in every country. The availability of the Home Connect function depends on the availability of Home Connect services in your country. You can find information about this at: www.home-connect.com.

To be able to use Home Connect, you must first set up the connection to the WLAN home network (Wi-Fi[1]) and to the Home Connect app.

- → *"Connecting the appliance to WLAN home network (Wi-Fi)", Page 40*

The Home Connect app guides you through the entire login process. Follow the instructions in the Home Connect app to configure the settings.

Tips

- Please consult the documents supplied by Home Connect.
- Please also follow the instructions in the Home Connect app.

Note: Please note the safety precautions in this instruction manual and make sure that they are also observed when operating the appliance via the Home Connect app.
→ *"Safety", Page 4*

16.1 Home Connect quick start

Connect your appliance to a mobile device quickly and easily.

Installing app

1. Install the Home Connect app on your mobile device.

   GET IT ON Google Play

   Download on the App Store

2. Start the app and set up access for Home Connect.

   The Home Connect app guides you through the entire login process.

Connecting the appliance to WLAN home network (Wi-Fi)

Requirements

- Home Connect app is installed on your mobile device.
- Wi-Fi on the router is activated.
- The appliance receives signals from the WLAN home network (Wi-Fi) at its installation location.

1. With the help of the Home Connect App scan the QR code.

2. Follow the instructions in the Home Connect app.

16.2 Home Connect settings

Adapt Home Connect to your needs. You can find the Home Connect settings in the basic settings for your appliance. Which settings the display shows will depend on whether Home Connect has been set up and whether the appliance is connected to your home network.

16.3 Remote Start Remote Start

You can use the Home Connect app to start the appliance with your mobile device.

Tip: If you select "rc:02" in the Basic settings → *Page 39* of this function, the function is permanently activated and you can start your appliance with a mobile device at any time.

[1] Wi-Fi is a registered trademark of the Wi-Fi Alliance.

Activating Remote Start Remote Start

When you have selected "rc:01" in the basic settings of this function, activate the function on your appliance.

Requirements

- The appliance is connected to your WLAN home network.
- The appliance is connected to the Home Connect app.
- "rc:01" is selected in the Basic settings → *Page 39* of this function.
- A programme is selected.

▸ Press Remote Start.

If you open the appliance door, the function is automatically deactivated.

✔ Remote Start button lights up.

Tip: To deactivate the function, press Remote Start.

16.4 Remote Diagnostics

Customer Service can use Remote Diagnostics to access your appliance if you contact them, have your appliance connected to the Home Connect server and if Remote Diagnostics is available in the country in which you are using the appliance.

Tip: For further information and details about the availability of Remote Diagnostics in your country, please visit the service/support section of your local website: www.home-connect.com

16.5 Software update

You can use this function to update the software of your appliance, e.g. for optimisation, troubleshooting or safety-relevant updating.
The Home Connect app informs you about available software updates.

16.6 Data protection

Please see the information on data protection.
The first time your appliance is registered on a home network connected to the Internet, your appliance will transmit the following types of data to the Home Connect server (initial registration):

- Unique appliance identification (consisting of appliance codes as well as the MAC address of the Wi-Fi communication module installed).
- Security certificate of the Wi-Fi communication module (to ensure a secure data connection).
- The current software and hardware version of your appliance.
- Status of any previous reset to factory settings.

This initial registration prepares the Home Connect functions for use and is only required when you want to use the Home Connect functions for the first time.

Note: Please note that the Home Connect functions can only be utilised with the Home Connect app. Information on data protection can be retrieved in the Home Connect app.

17 Cleaning and servicing

To keep your appliance working efficiently for a long time, it is important to clean and maintain it carefully.

17.1 Cleaning the tub

⚠ **WARNING**
Risk of harm to health!
Using detergents containing chlorine may result in harm to health.
- Never use detergents containing chlorine.

1. Remove any coarse soiling in the interior with a damp cloth.
2. Add detergent to the detergent dispenser.
3. Select the programme with the highest temperature.
4. Start the programme without tableware. → *Page 35*

17.2 Cleaning products

Only use suitable cleaning products to clean your appliance.
→ *"Safe use", Page 10*

17.3 Tips on appliance care

Follow the tips on appliance care to make sure your appliance functions properly at all times.

Action	Benefit
Wipe the door seals, the front of the dishwasher and the control panel regularly using a damp cloth and washing-up liquid.	This ensures the parts of the appliance will remain clean and hygienic.
If the appliance is not going to be used for a while, leave the door slightly ajar.	This will prevent unpleasant odours.

17.4 Machine Care Machine Care

Deposits, e.g. from remnants of food and limescale, can cause your appliance to malfunction. To avoid such faults and reduce odours, we recommend cleaning your appliance at regular intervals.
Machine Care combined with machine care products and machine cleaners is the right programme for the care of your appliance.

Tip: You can get our tested and approved Dishwasher Care and Machine Cleaner for Dishwashers online at https://www.bosch-home.com/store or from customer service.

Machine Care is a programme which removes various deposits in one washing cycle. Cleaning takes place in two phases:

Phase	Removal of	Detergent	Placement
1	Grease and limescale	Liquid machine care product or machine descaler in powder form.	Appliance interior, e.g. bottle hung in the cutlery basket or powder in the interior.
2	Food remnants and deposits	Machine cleaner	Detergent dispenser

To ensure optimum cleaning performance, the programme doses the detergents independently of each another during the relevant cleaning phase. Correct placement of the detergents is necessary here.
Run Machine Care without tableware if the indicator for Machine Care lights up on the control panel or if advised to do so by the display. The indicator will go out after you have run Machine Care. If your appliance does not have a reminder function, we recommend performing Machine Care every 2 months.

Running Machine Care

Notes

- Run the Machine Care programme without any tableware in the dishwasher.
- Only use machine care products and machine cleaners specially designed for dishwashers.
- Make sure that there are no aluminium parts, e.g. extractor hood grease filters or aluminium pans, in the interior of the appliance.
- If you have not run Machine Care after 3 washing cycles, the indicator for Machine Care will go out automatically.
- For optimum cleaning performance, ensure the correct placement of cleaners.
- Follow the safety instructions given on the packagings of the machine care products and machine cleaners.
- Activate the Extra Clean Zone → *Page 27* function.

1. Remove any coarse soiling in the interior with a damp cloth.
2. Clean the filters.
3. Place the machine care product in the appliance interior.

   Only use machine care products specially designed for dishwashers.
4. Pour the machine cleaner into the detergent dispenser until it is filled completely.

   Do not place any additional machine cleaner in the appliance interior.
5. Press Machine Care.
6. Press Start.

✔ Machine Care is run.
✔ Once the programme has ended, the indicator for Machine Care goes out.

17.5 Filter system

The filter system removes coarse soiling from the dishwashing cycle.

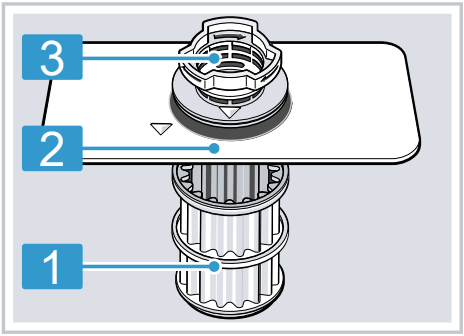

1	Micro filter
2	Fine filter
3	Coarse filter

Cleaning filters

Soiling in the dishwashing water may block the filters.

1. After each wash check the filters for residue.

2. Turn the coarse filter anticlockwise ① and remove the filter system ②.
   – Check that no foreign objects fall into the sump.

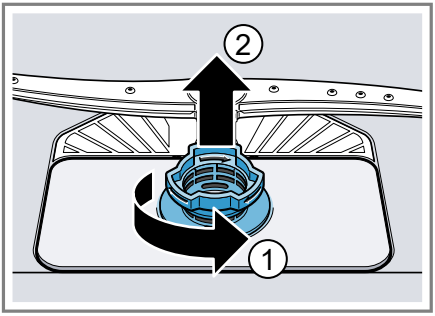

3. Pull down the micro filter to remove.

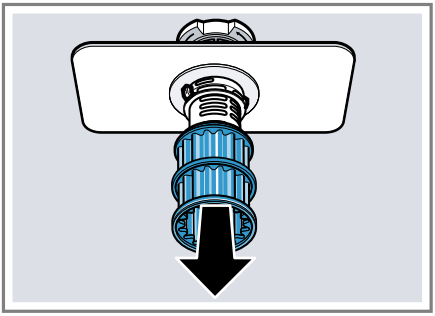

4. Press the locking catches ① together and lift the coarse filter out ②.

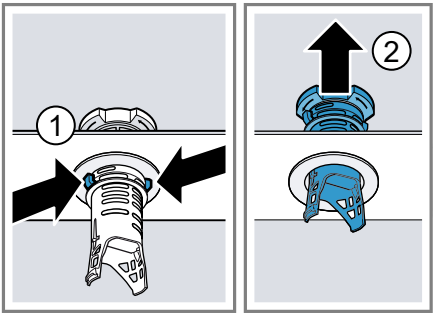

5. Clean the filter elements under running water.

   Carefully clean the rim of dirt between the coarse and the fine filter.
6. Re-assemble the filter system.

   Make sure that the locking catches on the coarse filter click into position.
7. Insert the filter system into the appliance and turn the coarse filter clockwise.
   – Make sure that the arrow markings match up.

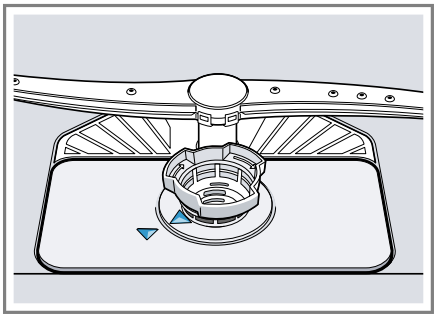

17.6 Cleaning spray arms

Limescale and soiling in the dishwashing water may block the nozzles and bearings on the spray arms. Clean the spray arms regularly.

1. Unscrew the upper spray arm ① and pull down to remove ②.

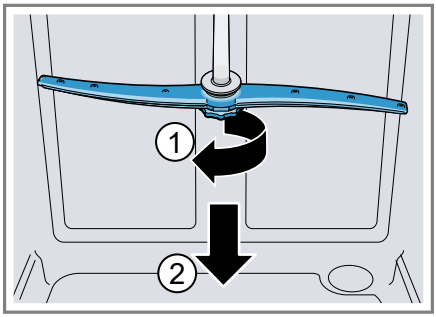

2. Pull up the lower spray arm to remove.

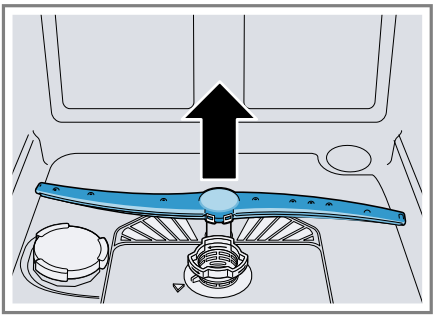

3. Check the outlet nozzles on the spray arms for blockages under running water and remove any foreign bodies.
4. Insert the lower spray arm.

✔ The spray arm clicks into position.

5. Insert the upper spray arm and screw it firmly in place.

18 Troubleshooting

You can rectify minor faults on your appliance yourself. Read the troubleshooting information before contacting after-sales service. This will avoid unnecessary costs.

⚠ **WARNING**
Risk of electric shock!
Incorrect repairs are dangerous.
- Repairs to the appliance should only be carried out by trained specialist staff.
- Only use genuine spare parts when repairing the appliance.
- If the power cord of this appliance is damaged, it must be replaced with a special connection cable, which is available from the manufacturer or his Customer Service.

Fault	Cause and troubleshooting
Appliance door will not open or cannot be opened easily.	Childproof lock is activated. ▸ Open the appliance door. → *Page 34*

Fault	Cause and troubleshooting
E:20-60 lights up alternately.	Appliance has detected calcified heating element. 1. Descale the appliance. 2. Operate the appliance with the water softening system.[1]
E:30-00 will light up alternately.	Water protection system is activated. 1. Turn off the water tap. 2. Call Customer Service → *Page 60*.
E:31-00 will light up alternately.	Water protection system is activated. 1. Turn off the water tap. 2. Call Customer Service → *Page 60*.
E:32-00 will light up alternately or indicator for water supply lights up.	Supply hose is kinked. ▸ Install the supply hose without kinks.
	Water tap is turned off. ▸ Turn on the water tap.
	Water tap is jammed or furred up. ▸ Turn on the water tap. The flow rate must be at least 10 l/min when the water supply is open.

[1] Depending on the appliance specifications

Fault	Cause and troubleshooting
E:32-00 will light up alternately or indicator for water supply lights up.	The filters in the water connection of the supply or AquaStop hose are blocked. **1.** Switch off the appliance. **2.** Pull out the mains plug. **3.** Turn off the water tap. **4.** Unscrew the water connection. **5.** Remove the filter from the supply hose 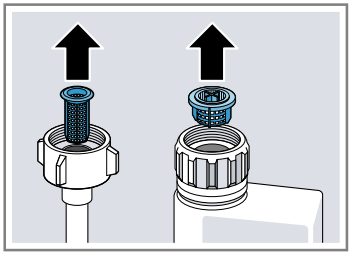 **6.** Clean the filter. **7.** Re-insert the filter in the supply hose. **8.** Screw the water connection back on. **9.** Check the water connection for leaks. **10.** Restore the power supply. **11.** Switch the appliance on.
E:34-00 will light up alternately.	Water is continuously running into the appliance. **1.** Turn off the water tap. **2.** Call Customer Service → *Page 60*.
E:61-03 will light up alternately. Water is not drained.	Wastewater hose is blocked or kinked. **1.** Reposition the wastewater hose without kinks. **2.** Remove residues.
	Siphon connection is still sealed. ▸ Check the connection to the siphon and open if necessary.
	Cover of the wastewater pump is loose. ▸ Secure the cover of the Wastewater pump → *Page 58* so it clicks into position.
E:61-02 will light up alternately.	Wastewater pump is blocked. ▸ Clean the wastewater pump. → *"Clean wastewater pump", Page 58*
	Cover of the wastewater pump is loose ▸ Secure the cover of the Wastewater pump → *Page 58* so it clicks into position.

Fault	Cause and troubleshooting
E:90-01 will light up alternately.	Mains voltage is too low. This is not a fault on the appliance. **1.** Contact an electrician. **2.** Have the mains voltage and electrical installation checked by an electrician.
E:92-40 will light up alternately.	Filters are soiled or blocked. ▸ Clean the filters. → *"Cleaning filters", Page 43*
A different error code appears in the display window. E:01-00 to E:90-10	A technical fault is present. **1.** Press ⏻. **2.** Unplug the appliance or switch off the fuse. **3.** Wait at least 2 minutes. **4.** Insert the mains plug of the appliance in a socket or switch on the fuse. **5.** Switch the appliance on. **6.** If the problem occurs again: – Press ⏻. – Turn off the water tap. – Pull out the mains plug. – Contact Customer Service → *Page 60* and give the error code.

Fault	Cause and troubleshooting
Tableware is not dry.	No rinse aid used or dosage set too low. **1.** Add Rinse aid → *Page 28*. **2.** Set the amount of rinse aid to be dispensed. → *"Setting the amount of rinse aid", Page 29*
	Programme or programme option has no drying phase, or the drying phase is too brief. ▸ Select a programme with drying, e.g. intensive, strong or ECO programme. Some option buttons decrease the drying result, e.g varioSpeed.
	Water collects in recesses of the tableware or cutlery.

Fault	Cause and troubleshooting
Tableware is not dry.	▸ Position tableware at an angle where possible. 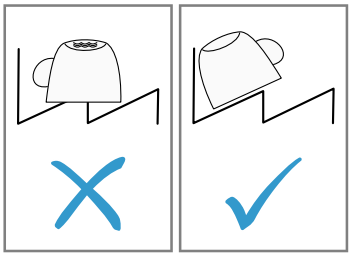
	The combined detergent used has a poor drying performance. **1.** Use rinse aid to improve drying performance. **2.** Use a different combined detergent with a better drying performance.
	Extra Dry not activated to improve drying performance. ▸ Activate Extra Dry.
	Tableware removed too early or drying process not yet ended. **1.** Wait until the programme ends. **2.** Only remove tableware 30 minutes after the programme has ended.
	Rinse aid used has a limited drying performance. ▸ Use a name-brand rinse aid. Eco products may have limited effectiveness.
Plastic tableware is not dry.	Not a fault. As plastic does not store heat so well, it also does not dry as well. ▸ No remedial action possible.
Cutlery is not dry.	Cutlery not arranged properly in the cutlery basket or cutlery drawer. Droplets can form on the cutlery contact points. **1.** Arrange cutlery individually where possible. → *Page 33* **2.** Avoid points of contact.
Appliance interior still wet after wash cycle.	Not a fault. The condensation drying principle causes water droplets in the tub – they are indeed desirable here. The moisture in the air condenses on the inside walls, runs off and is pumped out. No action required.

Fault	Cause and troubleshooting
Remnants of food on tableware.	Tableware is placed too close together or basket is overfilled. **1.** Arrange tableware with sufficient space in between. The spray jets must reach the surfaces of the tableware. **2.** Avoid points of contact.
	Spray arm rotation of the lower spray arm is blocked. ▸ Arrange tableware so that it does not obstruct spray arm rotation.
	Spray arm nozzles are blocked. ▸ Clean the Spray arms → *Page 44*.
	Filters are soiled. ▸ Clean the filters. → *"Cleaning filters", Page 43*
	Filters are inserted incorrectly and/or not engaged. **1.** Insert the filters properly. → *"Filter system", Page 43* **2.** Engage the filters.
	Washing programme selected too weak. ▸ Select a more intensive washing programme. ▸ Adjust the sensitivity of the sensors. → *"Sensors", Page 12*
	Tableware has been precleaned too intensely. The sensors chose a weaker programme. Stubborn soiling cannot be entirely removed. ▸ Only remove large remnants of food and do not prerinse tableware. ▸ Adjust the sensitivity of the sensors. → *"Sensors", Page 12*
	Tall narrow receptacles in corner areas are not rinsed adequately. ▸ Do not position tall narrow receptacles at too great an angle or in corner areas.
	Top baskets on right and left are not set to same height. ▸ Set the top baskets on the left and right to the same level.

Fault	Cause and troubleshooting
Detergent residue in the appliance	Lid of the detergent dispenser is blocked by items of tableware parts and will not open. 1. Arrange tableware in the top basket tableware so the tab collecting tray is not obstructed by tableware. → *"Arrange tableware", Page 33* Items of tableware are blocking the dispenser lid. 2. Do not place tableware or fragrance dispensers in the tablet collecting tray.
	The lid of the detergent dispenser is blocked by the tab and will not open. ▸ Position the tab in the detergent dispenser crosswise, not vertically.
	Tabs are used in the quick or short programme. Dissolving time of the tab is not attained. ▸ Select a more intensive Programme or use Powder detergent.
	Washing effect and dissolving performance are reduced after a prolonged storage time or detergent is very lumpy. ▸ Change your detergent → *Page 29*.
Water marks on plastic parts.	Due to laws of physics droplet formation on plastic surfaces is unavoidable. After drying water marks are visible. ▸ Select a more intensive programme. ▸ Position tableware at an angle. → *"Arrange tableware", Page 33* ▸ Use rinse aid. → *"Rinse aid", Page 28*
Wipeable or water-soluble coatings are present inside the appliance or on the door.	Detergent substances are deposited there. These coatings cannot generally be removed with chemicals. ▸ Change your detergent → *Page 29*. ▸ Clean the appliance mechanically.
Stubborn white coatings are present on tableware, inside the appliance or the door.	Detergent substances are deposited there. These coatings cannot generally be removed with chemicals. ▸ Change your detergent → *Page 29*. ▸ Clean the appliance mechanically.
	Too little detergent is being used. ▸ Increase the amount of detergent used or change Detergent → *Page 29*.

Fault	Cause and troubleshooting
Stubborn white coatings are present on tableware, inside the appliance or the door.	Washing programme selected too weak. ▸ Select a more intensive washing programme. ▸ Adjust the sensitivity of the sensors. → *"Sensors", Page 12*
Tea residue or lipstick marks on tableware.	Washing temperature is too low. ▸ Select a programme with a higher washing temperature.
	Too little detergent is being used or is unsuitable. ▸ Use a suitable Detergent → *Page 29* and follow the manufacturer's instructions for the amount to be used.
	Tableware has been precleaned too intensely. The sensors chose a weaker programme. Stubborn soiling cannot be entirely removed. ▸ Only remove large remnants of food and do not prerinse tableware. ▸ Adjust the sensitivity of the sensors. → *"Sensors", Page 12*
Coloured coatings (blue, yellow, brown) that are difficult or impossible to remove are present inside the appliance or on stainless steel tableware.	The formation of films is due to substances contained in vegetables (cabbage, celery, potatoes, noodles, etc.) or tap water (manganese). ▸ Clean the appliance. You can remove deposits with Mechanical cleaning → *Page 42* or a machine cleaning product. It may not always be possible to completely remove deposits but they are harmless to health.
	The formation of films is due to metal components on silver or aluminium tableware. ▸ Clean the appliance. You can remove deposits with Mechanical cleaning → *Page 42* or a machine cleaning product. It may not always be possible to completely remove deposits but they are harmless to health.
Plastic parts inside the appliance are discoloured.	Plastic parts inside the appliance may become discoloured during the life of the dishwasher. ▸ Discolouration can come about and will not impair functioning of the appliance.
Plastic parts are discoloured.	Washing temperature is too low. ▸ Select a programme with a higher washing temperature.

Fault	Cause and troubleshooting
Plastic parts are discoloured.	Tableware has been precleaned too intensely. The sensors chose a weaker programme. Stubborn soiling cannot be entirely removed. ▸ Only remove large remnants of food and do not prerinse tableware. ▸ Adjust the sensitivity of the sensors. → *"Sensors", Page 12*
Removable streaks are present on glasses, glassware with a metallic appearance and cutlery.	Amount of rinse aid to be dispensed is set too high. ▸ Set the rinse aid system to a lower setting.
	No rinse aid has been added. ▸ → *"Adding rinse aid", Page 28*
	Detergent residue is present in the final rinse. Lid of the detergent dispenser is blocked by tableware items and will not open fully. **1.** Arrange tableware in the top basket tableware so the tab collecting tray is not obstructed by tableware. → *"Arrange tableware", Page 33* Items of tableware are blocking the dispenser lid. **2.** Do not place tableware or fragrance dispensers in the tablet collecting tray.
	Tableware has been precleaned too intensely. The sensors chose a weaker programme. Stubborn soiling cannot be entirely removed. ▸ Only remove large remnants of food and do not prerinse tableware. ▸ Adjust the sensitivity of the sensors. → *"Sensors", Page 12*
Irreversible clouding of glassware.	Glasses are not dishwasher-proof, only suitable for dishwashers. ▸ Use dishwasher-proof glasses. Glasses are usually only suitable for use in a dishwasher, i.e. long-term wear or long-term changes must be expected. ▸ Avoid a lengthy steam phase (standing time after wash cycle ends). ▸ Use a programme with a lower temperature. ▸ Use detergent with a glass protection component.
Rust spots on cutlery.	Cutlery is not sufficiently rust-resistant. Knife blades are often more severely affected. ▸ Use rust-resistant tableware.

Fault	Cause and troubleshooting
Rust spots on cutlery.	Cutlery may also rust if washed together with rusting items. ▸ Do not wash rusting items.
Detergent residue is present in the detergent dispenser or the tablet collecting tray.	Spray arms were blocked by tableware so detergent was not rinsed out. ▸ Check that the spray arms are not blocked and can rotate freely.
	Detergent dispenser was damp when detergent was added. ▸ Only add detergent to a detergent dispenser when dry.
Excessive formation of foam occurs.	Hand washing-up liquid is present in dispenser for rinse aid. ▸ Immediately add rinse aid to the dispenser. → *"Adding rinse aid", Page 28*
	Rinse aid has been spilled. ▸ Remove the rinse aid with a cloth.
	Detergent or appliance care product used causes excessive foaming. ▸ Change the brand of detergent.

Fault	Cause and troubleshooting
Connection to home network is not established.	WLAN on router is not active. ▸ Check the wireless network connection of your router.
WLAN display is flashing.	Connection to home network is not available. ▸ Activate the wireless network connection on your router.
Home Connect cannot be implemented correctly.	Home Connect set incorrectly. ▸ Please consult the documents supplied for Home Connect.
	Technical fault is present. ▸ Please consult the information about support in the documents supplied for Home Connect.

Fault	Cause and troubleshooting
Refill indicator for rinse aid lights up.	Insufficient rinse aid. **1.** Add Rinse aid → *Page 28*. **2.** Set the amount of rinse aid to be dispensed. → *"Setting the amount of rinse aid", Page 29*

Fault	Cause and troubleshooting
Refill indicator for rinse aid does not light up.	Rinse aid system is switched off. ▸ Set the amount of rinse aid to be dispensed.

Fault	Cause and troubleshooting
Water is left in the appliance at the end of the programme.	Filter system or area under the filters is blocked. **1.** Clean the Filters → *Page 43*. **2.** Clean the Wastewater pump → *Page 58*.
	Programme has not yet ended. ▸ Wait until the programme ends or cancel the programme with **Reset**. ▸ → *"Terminate programme", Page 36*
Appliance cannot be switched on or operated.	Software update is taking place. ▸ Wait until the software update has finished.
	Appliance functions have failed. **1.** Pull out the mains plug or switch off the fuse. **2.** Wait at least 2 minutes. **3.** Connect the appliance to the power supply. **4.** Switch the appliance on.
Appliance does not start.	The mains fuse has tripped. ▸ Check the relevant fuse.
	Mains cable is not inserted. **1.** Check whether the socket works. **2.** Check whether the mains cable is properly inserted in the socket and on the rear of the appliance.
	Appliance door is not closed properly. ▸ Close the appliance door.
Programme starts automatically.	You did not wait until programme ended. ▸ → *"Terminate programme", Page 36*
Appliance stops during the programme or cuts out.	Appliance door is not closed properly. ▸ Close the appliance door.
	Power and/or water supply has been interrupted. **1.** Check the power supply. **2.** Check the water supply.
	Top basket is pressing against inner door and preventing appliance door from being closed securely. ▸ Check whether the rear panel of the appliance is being pressed in by a socket or hose holder that has not been removed.

Fault	Cause and troubleshooting
Appliance stops during the programme or cuts out.	▸ Arrange the tableware so that no parts project beyond the basket and prevent the appliance door from closing properly.
All LEDs lit up or flashing.	Electronics have detected a fault. **1.** Press the main switch button for approx. 4 seconds. → *"Controls", Page 17* The appliance is reset and restarted. **2.** If the problem occurs again: – Switch off the appliance. – Pull out the mains plug or switch off the fuse in the fuse box. – Wait at least 2 minutes. – Switch on the fuse in the fuse box or insert the mains plug. – Switch the appliance on. **3.** If the problem occurs again: – Contact customer service. → *"Customer Service", Page 60*

Fault	Cause and troubleshooting
Appliance door cannot be closed.	Door lock has been activated. ▸ Close the appliance door with greater force.
	Door cannot be closed due to installation method. ▸ Check whether the appliance has been installed properly. When closed, the appliance door, its decor or attached parts should not knock against adjacent cabinets or the worktop.
Lid on the detergent dispenser cannot be closed.	Detergent dispenser or lid are blocked by sticky detergent residue. ▸ Remove detergent residue.

Fault	Cause and troubleshooting
Filling valves making knocking noises.	Caused by the domestic installation. No appliance fault present. Does not affect functioning of the appliance. ▸ Can only be remedied in the domestic installation.
Knocking or rattling noise.	Spray arm is striking tableware. ▸ Arrange tableware so that the spray arms do not strike tableware.

Fault	Cause and troubleshooting
Knocking or rattling noise.	With a small load the water jets directly strike against the tub. ▸ Distribute the tableware evenly. ▸ Load the appliance with more tableware.
	Light items of tableware move about during the wash cycle. ▸ Position light items of tableware securely.

18.1 Clean wastewater pump

Large remnants of food or foreign bodies can block the waste water pump. As soon as the rinsing water no longer drains properly, the waste water pump must be cleaned.

⚠ **WARNING**
Risk of injury!
Sharp and pointed objects or fragments of glass may block the waste water pump and cause injury.
- Remove any foreign bodies carefully.

1. Disconnect the appliance from the power supply.
2. Remove the top and bottom basket.
3. Remove the filter system.
4. Scoop out any water.
   Use a sponge if necessary.
5. Prise off the pump cover using a spoon and grip it by the crosspiece.

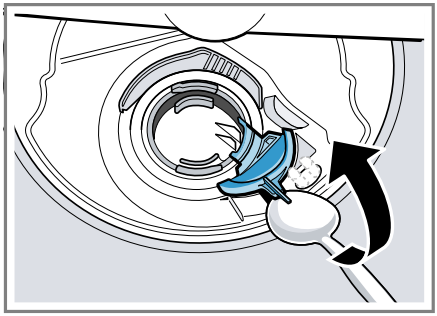

6. Lift the pump cover inwards at an angle and remove.
✔ You can now reach the impeller with your hand.
7. Remove any remnants of food and foreign bodies in the area of the impeller.
8. Insert the pump cover ① and press down ②.

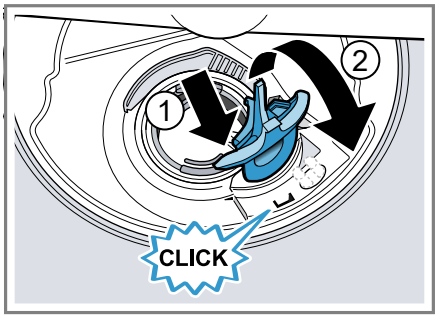

✔ The pump cover clicks into position.
9. Install the filter system.
10. Insert the top and bottom basket.

19 Transportation, storage and disposal

You can find out here how to prepare your appliance for transportation and storage. You will also find out how to dispose of old appliances.

19.1 Removing the appliance

1. Disconnect the appliance from the mains power supply.
2. Turn off the water tap.
3. Detach the drainage connection.
4. Detach the drinking water connection.
5. Loosen any screws fastening the appliance to cabinet parts.
6. Remove the base panel if fitted.
7. Pull the appliance out carefully, along with the hose behind it.

19.2 Protect appliance from frost

If there is a risk of frost where the appliance will be standing, e.g. in a holiday home, empty the appliance completely.

- Empty the appliance.
  → *"Transporting the appliance", Page 59*

19.3 Transporting the appliance

To avoid damage to the appliance, empty it before transporting.

Note: Always transport the dishwasher upright to prevent residual water getting into the machine's controls and damaging the appliance.

1. Remove tableware from the appliance.
2. Secure loose parts.
3. Switch on the appliance.
   → *Page 34*
4. Select the programme with the highest temperature.
5. Start the programme. → *Page 35*
6. To drain the appliance, terminate the programme after approx. 4 minutes.
   → *"Terminate programme", Page 36*
7. Switch off the appliance.
   → *Page 36*
8. Turn off the water tap.
9. To empty the residual water out of the appliance, detach the supply hose and let the water drain out.

19.4 Disposing of old appliance

Valuable raw materials can be reused by recycling.

⚠ **WARNING**
Risk of harm to health!
Children can lock themselves in the appliance, thereby putting their lives at risk.

- With redundant appliances, unplug the power cord. Then cut through the cord and damage the lock on the appliance door beyond repair so that the appliance door will no longer close.

1. Unplug the appliance from the mains.
2. Cut through the power cord.
3. Dispose of the appliance in an environmentally friendly manner.

   Information about current disposal methods are available from your specialist dealer or local authority.

This appliance is labelled in accordance with European Directive 2012/19/EU concerning used electrical and electronic appliances (waste electrical and electronic equipment - WEEE). The guideline determines the framework for the return and recycling of used appliances as applicable throughout the EU.

20 Customer Service

If you have any queries, are unable to rectify faults on the appliance yourself or if your appliance needs to be repaired, contact Customer Service. Detailed information on the warranty period and terms of warranty in your country is available from our after-sales service, your retailer or on our website.
If you contact Customer Service, you will require the product number (E-Nr.), the production number (FD) and the consecutive numbering (Z-Nr.) of your appliance.
The contact details for Customer Service can be found in the enclosed Customer Service directory or on our website.

20.1 Product number (E-Nr.), production number (FD) and consecutive numbering (Z-Nr.)

You can find the product number (E-Nr.), the production number (FD) and the consecutive numbering (Z-Nr.) on the appliance's rating plate.
The rating plate is located inside the appliance door.
Make a note of your appliance's details and the Customer Service telephone number to find them again quickly.

20.2 AQUA-STOP guarantee

In addition to warranty claims against the seller under the purchase agreement and in addition to our manufacturer's warranty, we offer compensation under the following conditions.

- If our Aqua-Stop system is defective and causes water damage, we will make good the damage for private users. To ensure protection from water damage, the appliance must be connected to the power supply.
- The liability guarantee is valid for the service life of the appliance.
- A claim can only be made under the guarantee if the appliance has been correctly installed and connected with Aqua-Stop according to our instructions; this also includes correctly fitting the Aqua-Stop extension (genuine accessory). Our guarantee does not cover defective supply lines or fittings up to the Aqua-Stop connection on the tap.
- If your appliance is fitted with Aqua-Stop, you can in principle leave your appliance unattended during operation and the tap turned on afterwards. The tap only needs to be turned off if you are away from home for a long period, e.g. on holiday for several weeks.

21 Technical specifications

Weight	Max.: 60 kg
Voltage	220-240 V, 50 Hz or 60 Hz
Power rating	2000 - 2400 W
Fuse	10 A
Water pressure	▪ min. 50 kPa (0.5 bar) ▪ max. 1000 kPa (10 bar)
Inlet rate	Min. 10 l/min
Water temperature	Cold water. Hot water max.: 60 °C
Capacity	15 place settings

21.1 Information regarding Free and Open Source Software

This product includes software components that are licensed by the copyright holders as free or open source software.
The applicable licence information is stored on your home appliance. You can also access the applicable licence information via your
Home Connect app: "Profile -> Legal information -> Licence Information".[1]
You can download the licence information on the brand product website. (Please search on the product website for your appliance model and additional documents). Alternatively, you can request the relevant information from oss-request@bshg.com or BSH Hausgeräte GmbH, Carl-Wery-Str. 34, 81739 Munich, Germany.
The source code will be made available to you on request.

Please send your request to oss-request@bshg.com or BSH Hausgeräte GmbH, Carl-Wery-Str.34, 81739 Munich, Germany.
Subject: „OSSREQUEST“
The cost of performing your request will be charged to you. This offer is valid for three years from the date of purchase or at least as long as we offer support and spare parts for the relevant appliance.

22 Declaration of Conformity

BSH Hausgeräte GmbH hereby declares that the appliance with Home Connect functionality conforms to the basic requirements and other relevant provisions of Directive 2014/53/EU.
A detailed RED Declaration of Conformity can be found online at www.bosch-home.com among the additional documents on the product page for your appliance.

[1] Depending on the appliance specifications

2.4 GHz band (2400–2483.5 MHz):
Max. 100 mW
5 GHz band (5150–5350 MHz +
5470–5725 MHz): Max. 100 mW

	BE	BG	CZ	DK	DE	EE	IE	EL	ES
	FR	HR	IT	CY	LI	LV	LT	LU	HU
	MT	NL	AT	PL	PT	RO	SI	SK	FI
	SE	NO	CH	TR	IS	UK (NI)			
5 GHz WLAN (Wi-Fi): For indoor use only.									

AL	BA	MD	ME	MK	RS	UK	UA
5 GHz WLAN (Wi-Fi): For indoor use only.							

Thank you for buying a Bosch Home Appliance!

Register your new device on MyBosch now and profit directly from:

- **Expert tips & tricks for your appliance**
- **Warranty extension options**
- **Discounts for accessories & spare-parts**
- **Digital manual and all appliance data at hand**
- **Easy access to Bosch Home Appliances Service**

Free and easy registration – also on mobile phones:
www.bosch-home.com/welcome

Looking for help? You'll find it here.

Expert advice for your Bosch home appliances, help with problems or a repair from Bosch experts.
Find out everything about the many ways Bosch can support you:
www.bosch-home.com/service
Contact data of all countries are listed in the attached service directory.

BSH Hausgeräte GmbH
Carl-Wery-Straße 34
81739 München, GERMANY
www.bosch-home.com

A Bosch Company

9001720307 (020323) 650 A1
aus