BOSCH

Register your new device on MyBosch now and get free benefits:
bosch-home.com/welcome

MyBosch

Microwave Oven

COA565G.0

[en] User manual and installation instructions

Table of contents

USER MANUAL

1 Safety 2
2 Preventing material damage 6
3 Environmental protection and saving energy 7
4 Familiarising yourself with your appliance 7
5 Accessories 12
6 Before using for the first time 13
7 Basic operation 13
8 Microwave 14
9 MicroCombi 16
10 Grill 16
11 Steam 17
12 Automatic programmes 21
13 Time-setting options 23
14 Childproof lock 24
15 Basic settings 24
16 Cleaning and servicing 25
17 Troubleshooting 29
18 Disposal 31
19 Customer Service 31
20 How it works 32

21 INSTALLATION INSTRUCTIONS 42
21.1 Safe installation 42

1 Safety

Observe the following safety instructions.

1.1 General information

- Read this instruction manual carefully.
- Keep the instruction manual and the product information safe for future reference or for the next owner.
- Do not connect the appliance if it has been damaged in transit.

1.2 Intended use

This appliance is designed only to be built into kitchen units. Read the special installation instructions.
Only a licensed professional may connect appliances without plugs. Damage caused by incorrect connection is not covered under the warranty.
The appliance can only be used safely if it is correctly installed according to the safety instructions. The installer is responsible for ensuring that the appliance works perfectly at its installation location.
Only use this appliance:

- To prepare meals and drinks.
- Under supervision. Never leave the appliance unattended when cooking for short periods.
- For household use and similar applications, such as: In kitchens for employees in shops, offices and other commercial sectors; in agriculture; by customers in hotels and other residential facilities; in bed and breakfasts.
- Up to an altitude of max. 2000 m above sea level.

This appliance complies with the standards EN 55011 and CISPR 11. It is a group 2, class B product. Group 2 means that microwaves are produced for the purpose of heating food. Class B means that the appliance is suitable for private households.

1.3 Restriction on user group

This appliance may be used by children aged 8 or over and by people who have reduced physical, sensory or mental abilities or inadequate experience and/or knowledge, provided that they are supervised or have been instructed on how to use the appliance safely and have understood the resulting dangers.
Do not let children play with the appliance.
Children must not perform cleaning or user maintenance unless they are at least 15 years old and are being supervised.
Keep children under the age of 8 years away from the appliance and power cable.

1.4 Safe use

Always place accessories in the cooking compartment the right way round.
→ *"Accessories", Page 12*

⚠ WARNING – Risk of fire!

Combustible objects that are left in the cooking compartment may catch fire.

- Never store combustible objects in the cooking compartment.
- If smoke is emitted, the appliance must be switched off or the plug must be pulled out and the door must be held closed in order to stifle any flames.

Loose food remnants, fat and meat juices may catch fire.

- Before using the appliance, remove the worst of the food residues and remnants from the cooking compartment, heating elements and accessories.

Opening the appliance door creates a draught. Greaseproof paper may come into contact with the heating element and catch fire.

- Never place greaseproof paper loosely over accessories when preheating the appliance and while cooking.
- Always cut greaseproof paper to size and use a plate or baking tin to hold it down.

⚠ WARNING – Risk of burns!

The appliance and its parts that can be touched become hot during use.

- Caution should be exercised here in order to avoid touching heating elements.
- Young children under 8 years of age must be kept away from the appliance.

Accessories and cookware get very hot.

- Always use oven gloves to remove accessories or cookware from the cooking compartment.

When the cooking compartment is hot, any alcoholic vapours inside may catch fire.

- Only use small quantities of drinks with a high alcohol content in food.
- Open the appliance door carefully.

⚠ WARNING – Risk of scalding!

The accessible parts of the appliance become hot during operation.

- Never touch these hot parts.
- Keep children at a safe distance.

Hot steam may escape when you open the appliance door. Steam may not be visible, depending on the temperature.

- Open the appliance door carefully.
- Keep children at a safe distance.

If there is water in the cooking compartment when it is hot, this may create hot steam.

- Never pour water into the cooking compartment when the cooking compartment is hot.

⚠ WARNING – Risk of injury!

Scratched glass in the appliance door may develop into a crack.

- Do not use any harsh or abrasive cleaners or sharp metal scrapers to clean the glass on the appliance door, as they may scratch the surface.

The hinges on the appliance door move when the door is opened and closed, which could trap your fingers.

- Keep your hands away from the hinges.

Components inside the appliance door may have sharp edges.

- Wear protective gloves.

⚠ WARNING – Risk of electric shock!

Incorrect repairs are dangerous.

- Repairs to the appliance should only be carried out by trained specialist staff.
- Only use genuine spare parts when repairing the appliance.
- If the power cord of this appliance is damaged, it must be replaced by the manufacturer, the manufacturer's Customer Service or a similarly qualified person in order to prevent any risk.

If the insulation of the power cord is damaged, this is dangerous.

- Never let the power cord come into contact with hot appliance parts or heat sources.
- Never let the power cord come into contact with sharp points or edges.
- Never kink, crush or modify the power cord.

An ingress of moisture can cause an electric shock.

- Do not use steam- or high-pressure cleaners to clean the appliance.

If the appliance or the power cord is damaged, this is dangerous.
- Never operate a damaged appliance.
- Never operate an appliance with a cracked or fractured surface.
- Call customer services. → *Page 31*

⚠ WARNING – Danger: Magnetism!
Permanent magnets are used in the control panel or in the controls. These may affect electronic implants, e.g. heart pacemakers or insulin pumps.
- Wearers of electronic implants must stay at least 10 cm away from the control panel.

⚠ WARNING – Risk of suffocation!
Children may put packaging material over their heads or wrap themselves up in it and suffocate.
- Keep packaging material away from children.
- Do not let children play with packaging material.

Children may breathe in or swallow small parts, causing them to suffocate.
- Keep small parts away from children.
- Do not let children play with small parts.

1.5 Microwave

CAREFULLY READ THE IMPORTANT SAFETY INSTRUCTIONS AND KEEP THEM SAFE FOR FUTURE USE

⚠ WARNING – Risk of fire!
Using the appliance for anything other than its intended purpose is dangerous and may cause damage. For example, heated slippers and pillows filled with grain or cereal may catch fire, even several hours later.
- Never dry food or clothing with the appliance.
- Never heat up slippers, pillows filled with grain or cereal, sponges, damp cleaning cloths or similar with the appliance.
- The appliance must only be used to prepare food and drink.

Food and its packaging and containers may catch fire.
- Never heat food in heat-retaining packaging.
- Do not leave food unattended while it is heating in containers made of plastic, paper or other combustible materials.
- Never set the microwave power too high or the cooking time too long. Follow the instructions provided in this user manual.
- Never use the microwave to dry food.
- Never defrost or heat food with a low water content, such as bread, at too high a microwave power or for too long.

Cooking oil may catch fire.
- Never use the microwave to heat cooking oil on its own.

⚠ WARNING – Risk of explosion!
Liquids and other food may easily explode when in containers that have been tightly sealed.
- Never heat liquids or other food in containers that have been tightly sealed.

⚠ WARNING – Risk of burns!
Foods with peel or skin may burst or explode during heating, or even afterwards.
- Never cook eggs in their shell or heat hard-boiled eggs in their shell.
- Never cook shellfish or crustaceans.
- Always prick the yolk of eggs before microwaving.
- The skin of foods that have a peel or skin, such as apples, tomatoes, potatoes and sausages, may burst. Before heating, prick the peel or skin.

Heat is not distributed evenly through baby food.
- Never heat baby food in closed containers.
- Always remove the lid or teat.
- Stir or shake well after heating.
- Check the temperature before giving the food or drink to a child.

Heated food gives off heat. The cookware may become hot.
- Always use oven gloves to remove cookware or accessories from the cooking compartment.

Airtight packaging may burst when food is heated.

- Always follow the instructions on the packaging.
- Always use oven gloves to remove the dishes from the cooking compartment.

The accessible parts of the appliance become hot during operation.

- Never touch these hot parts.
- Keep children at a safe distance.

Using the appliance for anything other than its intended purpose is dangerous. This is because, for instance, overheated slippers, pillows filled with grain or cereal, sponges and damp cleaning cloths, etc., may cause burns to the skin.

- Never dry food or clothing with the appliance.
- Never heat up slippers, pillows filled with grain or cereal, sponges, damp cleaning cloths or similar with the appliance.
- The appliance must only be used to prepare food and drink.

⚠ WARNING – Risk of scalding!

There is a possibility of delayed boiling when a liquid is heated. This means that the liquid reaches the boiling temperature without the usual steam bubbles rising to the surface. Exercise caution even when only gently shaking the container. The hot liquid may suddenly boil over and splatter.

- Always place a spoon in the container when heating liquids. This prevents delayed boiling.

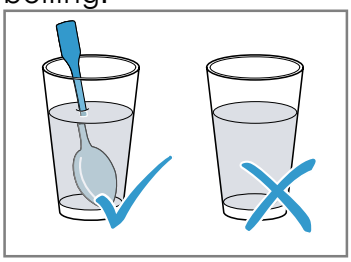

⚠ WARNING – Risk of injury!

Unsuitable cookware may crack. Porcelain or ceramic cookware can have small perforations in the handles and lid. These perforations conceal a cavity below. If moisture penetrates this cavity, it could cause the cookware to crack.

- Only use microwave-safe cookware.

Cookware and containers made from metal or cookware with metal edging may lead to sparks being formed during simple microwave operation. The appliance is damaged.

- Never use metal containers during microwave-only operation.
- Only use microwave-safe cookware or use the microwave in combination with a type of heating.

⚠ WARNING – Risk of electric shock!

The appliance uses a high voltage.

- Never remove the casing.

⚠ WARNING – Risk of serious harm to health!

Inadequate cleaning may destroy the surface of the appliance, reduce its service life, and lead to dangerous situations, such as escaping microwave energy.

- Clean the appliance on a regular basis, and remove any food residue immediately.
- Always keep the cooking compartment, door and door stop clean.
  → *"Cleaning and servicing", Page 25*

Never operate the appliance if the cooking compartment door is damaged. Microwave energy may escape.

- Never use the appliance if the cooking compartment door or the plastic door frame is damaged.
- Any repair work must only be carried out by the after-sales service.

Microwave energy will escape from appliances that do not have any casing.

- Never remove the casing.
- Contact our after-sales service if maintenance or repair work is needed.

1.6 Steam

Follow these instructions when using a steam function.

⚠ WARNING – Risk of scalding!

The water in the water tank may become very hot if you operate the appliance for long periods.

- Always empty the water tank after using the steam function.

Hot steam is generated in the cooking compartment.

- Do not reach into the cooking compartment when using steam.

Hot liquid may spill over the sides of the accessory when it is removed from the cooking compartment.

- Remove hot accessories with care and always wear oven gloves.

⚠ **WARNING – Risk of fire!**

Due to the hot surfaces, vapours from flammable liquids may catch fire in the cooking compartment (explosion). The appliance door may spring open. Hot steam and jets of flame may escape.

- Do not pour flammable liquids (e.g. alcoholic drinks) into the water tank.
- Only fill the water tank with water or with the descaling solution we have recommended.

2 Preventing material damage

2.1 General

ATTENTION!

When the cooking compartment is hot, any water inside it will create steam. The change in temperature may cause damage.

- Never pour water into the cooking compartment when it is still hot.

The prolonged presence of moisture in the cooking compartment leads to corrosion.

- Always wipe away the condensation after cooking.
- Do not keep moist food in the cooking compartment for a long time with the door closed.
- Do not store food in the cooking compartment.

Leaving the appliance to cool down with the door open will damage the front of neighbouring kitchen units over time.

- Always allow the cooking compartment to cool down with the door closed after cooking at high temperatures.
- Take care not to trap anything in the appliance door.
- Only leave the cooking compartment to dry with the door open if a lot of moisture was produced during operation.

If the seal is very dirty, the appliance door will no longer close properly during operation. This may damage the front of adjacent kitchen units.

- Keep the seal clean at all times.
- Never operate the appliance if the seal is damaged or missing.

Sitting or placing objects on the appliance door may damage it.

- Do not place, hang or support objects on the appliance door.
- Do not place cookware or accessories on the appliance door.

With certain models, accessories may scratch the door pane when closing the appliance door.

- Always push accessories fully into the cooking compartment.

2.2 Microwave

Follow these instructions when using the microwave.

ATTENTION!

Metal touching the wall of the cooking compartment will cause sparks, which may damage the appliance or the inner door pane.

- Metal (e.g. a spoon in a glass) must be kept at least 2 cm from the cooking compartment walls and the inside of the door.

Placing aluminium containers in the appliance may cause sparks, which will damage the appliance.

- Do not use aluminium containers in the appliance.

Operating the appliance without food in the cooking compartment may lead to overloading.

- Do not switch on the microwave unless there is food inside. The only exception to this rule is when performing a short cookware test.

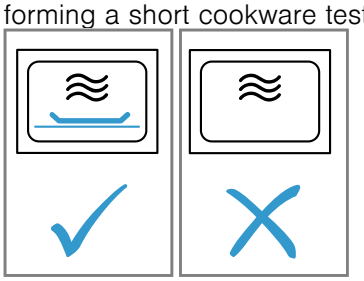

If you prepare several bags of microwave popcorn in immediate succession at a microwave power level that is too high, the cooking compartment may be damaged.

- Leave the appliance to cool down for several minutes between each use.
- Never set a microwave power level that is too high.
- Use a maximum microwave output of 600 watts.
- Always place the popcorn bag on a glass plate.

Using unsuitable cookware may result in damage.

- When using the grill or the microwave combined operation, only use cookware that can withstand high temperatures.

2.3 Steam

Follow these instructions when using the steam function.

ATTENTION!

Silicone bakeware is not suitable for combined operation with steam.

- Cookware must be heat- and steam-resistant.

Using cookware with rust spots may cause corrosion in the cooking compartment. Even the smallest spots of rust can cause corrosion.

- Do not use cookware with rust spots.

Dripping liquids make the cooking compartment floor dirty.

- When steaming with a perforated cooking container, always place the baking tray, the universal pan or the unperforated cooking container underneath. This will catch any liquid that drips down.

Hot water in the water tank may damage the steam system.

- Only fill the water tank with cold water.

If there is water on the cooking compartment floor when operating the appliance at temperatures above 120 °C, this will damage the enamel.

- Do not use the appliance if there is water on the cooking compartment floor.
- Wipe away any water on the cooking compartment floor before operation.

If descaling solution comes into contact with the control panel or other delicate surfaces, it will damage them.

- Remove descaling solution immediately with water.

Cleaning the water tank in the dishwasher will damage it.

- Do not clean the water tank in the dishwasher.
- Clean the water tank with a soft cloth and standard washing-up liquid.

3 Environmental protection and saving energy

3.1 Disposing of packaging

The packaging materials are environmentally compatible and can be recycled.

- Sort the individual components by type and dispose of them separately.

3.2 Saving energy

If you follow these instructions, your appliance will use less power.

Open the appliance door as little as possible during operation.

- This will maintain the temperature in the cooking compartment and eliminate the need for the appliance to reheat.

Hide the clock in standby mode.

- The appliance saves energy in standby mode.

4 Familiarising yourself with your appliance

4.1 Control panel

You can use the control panel to configure all functions of your appliance and to obtain information about the operating status.

On certain models, specific details such as colour and shape may differ from those pictured.

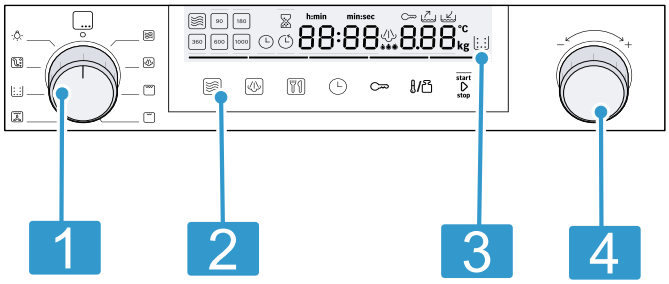

1	**Function selector** Use the function selector to set the operating modes or other functions.
2	**Touch fields** Use the touch fields to set different functions directly.
3	**Display**
4	**Rotary selector** You can turn the rotary selector clockwise and anti-clockwise.

Function selector

Use the function selector to set the types of heating and other functions. On some product variants, the function selector can be pushed in. If you turn the function selector from the zero setting to a function, it takes a few seconds for the relevant function to be available.

Symbol	Setting	Use
○	Zero setting	The appliance is switched off and is in energy-saving mode.
	Microwave	Select microwave operation.
	Steam	Hot steam is fed into the cooking compartment.
	Full-surface grill	The entire area below the grill element becomes hot.
	Centre-area grill	The centre part of the grill element becomes hot.
	Descale	This function descales the evaporator and ensures it remains fully functioning.
	Rinse	The pipes in the steam unit are rinsed with water. We recommend using the rinsing function after every steam operation.
	Programmes	This gives you access to preprogrammed settings for many dishes.
	Interior lighting	Switches on the interior lighting. The appliance is not heating up.

Touch fields

Touch fields are touch-sensitive surfaces. To select a function, touch the relevant field.

Symbol	Touch field	Use
	Microwave	Select the microwave power levels or switch on the microwave function for grilling or steaming.
	Steam	Select a steam setting or switch on the steam function for a type of heating.
	Programmes	Call up the programme selection and use the rotary selector to set the programme number.
	Time-setting options	Select the "Time-setting options" symbol and use the rotary selector to set the time-setting options you require.
	Childproof lock	Pressing and holding activates or deactivates the childproof lock.
	Temperature/weight	Use the rotary selector to select and set the temperature or weight.
start ▷ stop	Start/stop	Start or pause the operation.

Display

You can see the current setting values or options in the display.
The value that you can currently set is highlighted.
It is highlighted by a red bar displayed below the set value.
You can use the rotary selector to change the highlighted value directly.

Display elements

You can find a brief explanation of the different display elements below.

Symbol	Name	Meaning
⌛	Timer	If the symbol is highlighted, the timer appears on the display.
⏱	Cooking time	If the symbol is highlighted, the cooking time appears on the display.
🕒	Clock	If the symbol is highlighted, the clock appears on the display.
h:min	Hours/minutes	The cooking time is displayed in hours and minutes.
min:sec	Minutes/seconds	The cooking time is displayed in minutes and seconds.
🔑	Childproof lock	If the symbol lights up, the childproof lock is activated.
	Drip tray	The symbol indicates the status of the drip tray. The symbol lights up and the arrow flashes: ▪ The drip tray is in the tank recess. ▪ The drip tray is full. ▪ Empty the drip tray. The symbol flashes and the arrow does not flash: ▪ The drip tray is not in the tank recess. ▪ Insert the drip tray into the tank recess. The symbol lights up and the arrow does not light up: ▪ The drip tray is in the tank recess. ▪ No further action necessary.
	Water tank	The symbol indicates the status of the water tank. The symbol lights up and the arrow flashes: ▪ The water tank is in the tank recess. ▪ The water tank is empty. ▪ Fill the water tank. The symbol flashes and the arrow does not flash: ▪ The water tank is not in the tank recess. ▪ Insert the water tank into the tank recess. The symbol lights up and the arrow does not light up: ▪ The water tank is in the tank recess. ▪ No further action necessary.
	Descale	If this symbol lights up, the appliance must be descaled.

Temperature display

The temperature display shows the heating progress.

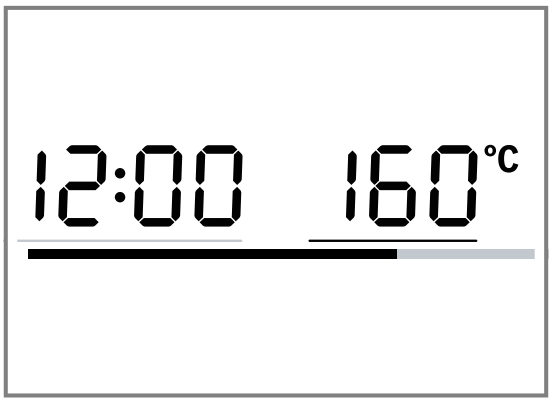

The red bar at the bottom of the display shows that the appliance is heating up. If a type of heating is in use, the bar turns red from left to right as the cooking compartment heats up. If you are using the grill or steam mode, the entire bar lights up red immediately. The bar does not light up when the microwave function is in use. When you are preheating the appliance, the optimal time to place your food in the cooking compartment is as soon as all five sections of the line have turned red.
Due to thermal inertia, the temperature that is displayed may differ slightly from the actual temperature inside the cooking compartment.

Night mode

To save energy, the control panel brightness is automatically reduced to a lower level between 10 p.m. and 5.59 a.m.

Rotary selector

You can use the rotary selector to change the adjustment values shown on the display.

For most selection lists, e.g. programmes, the first point begins again following the last point. For some selection lists, e.g. cooking time, rotate the rotary selector back again once the minimum or maximum value has been reached.

4.2 Operating modes

The menu is divided into different operating modes.

Operating mode	Use
Microwave	You can use the microwave to cook, heat up or defrost your food more quickly.
Steam	Cook food with steam. There are various finely tuned steam settings that will allow you to cook your food to perfection.
Full-surface grill	For grilling flat items such as steaks, sausages or bread, and for cooking au gratin.
Centre-area grill	For grilling small amounts of steak, sausages, bread and pieces of fish.
Microwave combined operation	In addition to the steam function or grill function, you can also switch on the microwave.
Steam combined operation	In addition to the microwave function or grill function, you can also switch on the steam function.
Cleaning	Different cleaning functions are available: Descaling and rinsing
Basic settings	Adjust the basic settings. → *"Basic settings", Page 24*

4.3 Types of heating

Here you can find an overview of the types of heating. You can find recommendations on using the types of heating.

Symbol	Name	Temperature/ settings	Use
	Full-surface grill	Grill settings: ▪ 1 = low ▪ 2 = medium ▪ 3 = high	Grill flat items such as steak, sausages or bread. Gratinate food.
	Centre-area grill	Grill settings: ▪ 1 = low ▪ 2 = medium ▪ 3 = high	For grilling small amounts of steak, sausages, bread and pieces of fish.

Note: For each type of heating, the appliance specifies a default temperature. You can accept this default temperature or change it in the relevant area.

4.4 Cooking compartment

The functions in the cooking compartment make your appliance easier to use.

Interior lighting

The interior lighting remains lit while the appliance is in operation. When the appliance ends the operation, it switches off.

When you open the appliance door, the interior lighting switches on. This makes it easier to clean your appliance, for example. After approximately 15 minutes, the interior lighting automatically switches itself off.

Cooling fan

The cooling fan switches on and off as required. The hot air escapes through the ventilation slots above the appliance door.

ATTENTION!

Covering the ventilation slots will cause the appliance to overheat.

- Do not cover the ventilation slots.

To cool the cooking compartment more quickly after operation, the cooling fan continues to run for a certain period afterwards. If the appliance is running in microwave operation, the appliance remains cool, but the cooling fan still switches on. The cooling fan may continue to run even when microwave operation has ended.

Condensation

Condensation can occur in the cooking compartment and on the appliance door when cooking. Condensation is normal and does not adversely affect appliance operation. Wipe away the condensation after cooking.

4.5 Tank cover

The tank cover is located below the appliance door and allows for access to the drip tray and water tank.

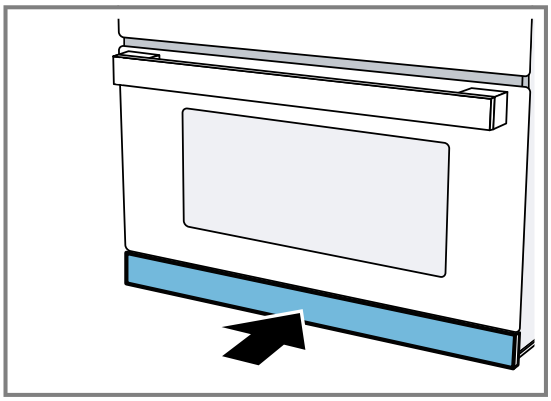

4.6 Water tank

The water tank is located to the right behind the tank cover.

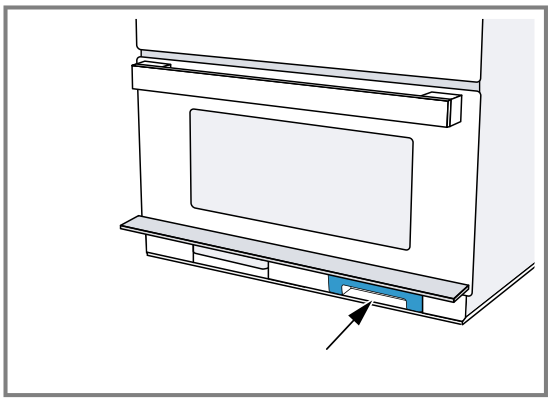

Fill the water tank with water to operate the appliance using steam modes.
→ *"Filling the water tank", Page 19*

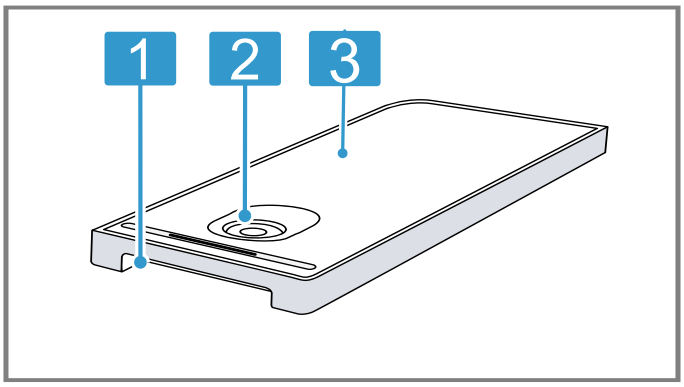

1	Handle for removing and inserting
2	Opening for filling and emptying
3	Tank cover

4.7 Drip tray

The drip tray is located to the left behind the tank cover.

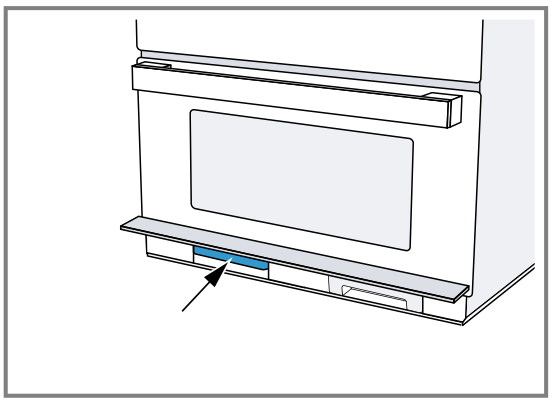

Empty the drip tray before and after running the cleaning functions → *Page 27*.

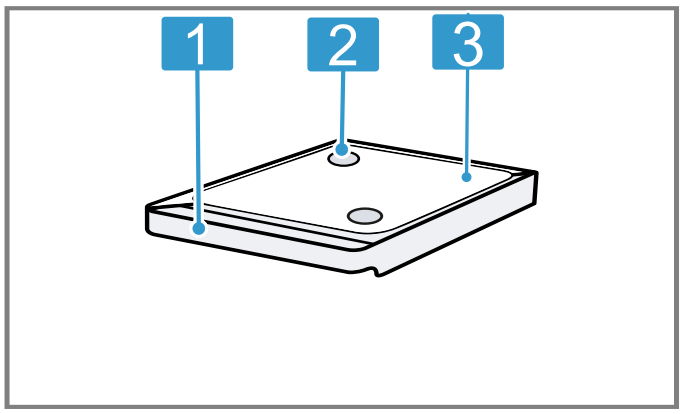

1	Handle for removing and inserting
2	Collection openings
3	Tank cover

5 Accessories

Use original accessories. These have been made especially for your appliance.

Accessories	Use
Wire rack	▪ Wire rack for baking and roasting in oven operation. ▪ Wire rack for grilling, e.g. steaks, sausages and bread ▪ Wire rack as a storage space, e.g. for flat ovenproof dishes
Glass pan	▪ For cooking food ▪ Splash guard when grilling directly on the wire rack ▪ Microwave-safe
Steam cookware	▪ For cooking rice, potatoes and vegetables ▪ Place the steam container into the glass tray in order to cook with the "Steam" or "Steam with microwave" operating modes ▪ Place the food directly onto the steam container

5.1 Additional accessories

Additional accessories may be enclosed depending on the appliance model.

Accessories	Use
Wire insert	▪ Wire rack for roasting ▪ Insert into the glass tray with its feet to the bottom ▪ Ensures that fat and meat juices drip into the glass tray ▪ Not suitable for use in microwave operation or steam mode

5.2 Other accessories

You can purchase other accessories from our after-sales service, specialist retailers or online.
You will find a comprehensive range of products for your appliance in our brochures and online:
www.bosch-home.com
Accessories vary from one appliance to another. When purchasing accessories, always quote the exact product number (E no.) of your appliance.
You can find out which accessories are available for your appliance in our online shop or from our after-sales service.

Glass roasting dish

Use
- Stews
- Bakes

5.3 Shelf positions

The cooking compartment has 4 shelf positions.
The shelf positions are numbered from bottom to top.
Insert the accessory into the guide and slide it in fully.
The cooking compartment floor at position 0 is particularly suitable for microwave operation. The microwave output is best on the cooking compartment floor. Only use microwave-safe cookware.

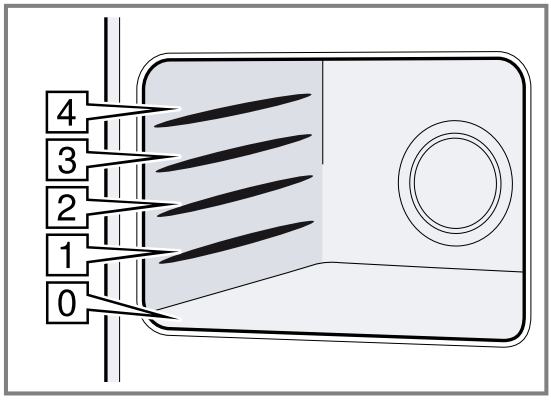

6 Before using for the first time

Configure the settings for initial start-up. Clean the appliance and accessories.

6.1 Setting the time

During initial use, the time display is highlighted. 12:00 flashes on the display and ◷ lights up.

1. Set the time using the rotary selector.
2. Press ◷.
✔ The time is set.

6.2 Setting the water hardness

Requirements

- Before you set the water hardness, ask your water supplier about the hardness of your tap water.
- The appliance is switched off.

1. Press and hold ◷ for a few seconds.
✔ The first basic setting appears on the display.
2. Press ◷ repeatedly until c05 appears.
3. Use the rotary selector to select the water hardness.

   Tip: If your tap water is very hard, we recommend that you use softened water. If you use only softened water, you can set your appliance to the "softened" water hardness range.

   Tip: If you use mineral water, set the water hardness range to "very hard". If you use mineral water, you must only use non-carbonated mineral water.

Water hardness range	Setting
0	0 softened
1 (up to 1.3 mmol/l)	1 soft
2 (1.3 - 2.5 mmol/l)	2 moderately hard
3 (2.5 - 3.8 mmol/l)	3 hard
4 (above 3.8 mmol/l)	4 very hard

4. To save the changes, press and hold ◷ for a few seconds.

6.3 Cleaning the appliance before using it for the first time

Clean the cooking compartment and accessories before using the appliance to prepare food for the first time.

Requirement: Ensure that there is no leftover packaging, accessories or other objects in the cooking compartment.

1. Before heating, wipe the smooth surfaces in the cooking compartment with a soft, damp cloth.
2. Close the appliance door.
3. Ventilate the room while the appliance is heating.
4. Use the function selector to set ▭.
5. Set to grill setting 3 using the rotary selector.
6. Press start▷stop.
✔ The appliance starts heating.
7. Use start▷stop to switch off the appliance after one hour.
8. Turn the function selector to the zero setting.
9. Wait until the cooking compartment has cooled down.

6.4 Cleaning the accessories

▶ Clean the accessory thoroughly with soapy water and a soft dish cloth.

7 Basic operation

7.1 Switching on the appliance

▶ Turn the function selector to switch on the appliance.
✔ The appliance is ready to use.
✔ A default value appears in the display.

Note: You can set the childproof lock only when the appliance is switched off. Some indicators also remain visible on the display when the appliance has been switched off.
Switch off your appliance when it is not being used. If no settings are applied for an extended period, the appliance switches itself off automatically.

7.2 Switching off the appliance

Switch your appliance off when you are not using it. If no settings are applied for an extended period, the appliance switches itself off automatically.

▶ Turn the function selector to the off position.
✔ The appliance stops any ongoing functions.
✔ The display shows the time.
✔ Some indicators also remain visible on the display when the appliance has been switched off.

Note: In the
→ *"Basic settings", Page 24*, you can set whether or not the time should be displayed when the appliance is switched off.

7.3 Setting an operating mode

Requirement: The appliance must be switched on.

1. Use the function selector to select the operating mode.
   If required, implement additional settings. To do this, touch the appropriate field and use the rotary selector to change the value.
2. Press start▷stop.
✔ The appliance starts the operation.

7.4 Setting the cooking time

1. Set an operating mode.
2. Press ◷ until ◷ is highlighted.

3. Use the rotary selector to set the required cooking time.
4. Press start▷stop.
✔ The appliance starts heating.
✔ start▷stop lights up.
✔ You can see the cooking time counting down.

7.5 Pausing the operation

1. Press start▷stop or open the appliance door.
✔ The appliance stops the operation.
✔ start▷stop flashes.
2. Close the appliance door.
3. Press start▷stop.
✔ The appliance continues the operation.
✔ start▷stop lights up.

7.6 Stopping operation

You can stop operation at any time.

▶ Turn the function selector to the off position.
The fan may continue to run after operation has been paused or stopped.
✔ The appliance stops any ongoing functions.

7.7 Automatic safety switch-off function

The automatic safety switch-off is activated if your appliance is operating for a long time with no cooking time having been set.
The appliance automatically switches off after 9 hours.

8 Microwave

You can use the microwave to cook, heat up, bake or defrost food very quickly. The microwave can be used on its own or in combination with a type of heating.

8.1 Microwave-safe cookware and accessories

To heat food evenly and avoid damaging your appliance, it is important to use the right cookware and accessories.
Note: Read the manufacturer's instructions before using any cookware in the microwave. If in doubt, carry out a cookware test.

Microwave-safe

Cookware and accessories	Reason
Cookware made from heat-resistant, microwave-safe material: ■ Glass ■ Glass ceramic ■ Porcelain ■ Temperature-resistant plastic ■ Fully glazed ceramic without cracks	These materials allow microwaves to pass through. Microwaves do not damage heat-resistant cookware.
Metal cutlery	**Note:** You can use metal cutlery, e.g. place a spoon in a glass, to prevent delayed boiling.

ATTENTION!
Metal touching the wall of the cooking compartment will cause sparks, which may damage the appliance or the inner door pane.

▶ Metal (e.g. a spoon in a glass) must be kept at least 2 cm from the cooking compartment walls and the inside of the door.

Not microwave-safe

Cookware and accessories	Reason
Metal cookware	Metal does not allow microwaves to pass through. The food hardly heats up.
Cookware with gold or silver decoration	Microwaves can damage gold and silver decoration. **Tip:** You can only use this kind of cookware if the manufacturer guarantees that it is microwave-safe.

8.2 Testing cookware for microwave suitability

Test cookware to see whether it is suitable for microwave use. Testing cookware is the only time the appliance should be operated in microwave mode without any food inside.

⚠ **WARNING – Risk of scalding!**
The accessible parts of the appliance become hot during operation.

▶ Never touch these hot parts.
▶ Keep children at a safe distance.

1. Place the empty cookware in the cooking compartment.
2. Set the appliance to run for 30 seconds to 1 minute at maximum power.
3. Press start▷stop to start.
4. Check the cookware several times:
   – If the cookware is cold or warm to the touch, it is suitable for microwave use.
   – If the cookware becomes hot or sparks are created, stop the cookware test. The cookware is not microwave-safe.

8.3 Microwave output settings

This is where you can find an overview of the different microwave power settings and when to use them.

Microwave output in watts	Use
90	Defrost delicate foods.
180	Defrost food and continue cooking.
360	Cook meat and fish or heat delicate foods.
600	Heat and cook food.
1000	Heat liquids.

Notes

- The appliance suggests a cooking time for each microwave setting. You can accept this value or change it in the relevant area.
- The maximum microwave output setting is not designed for heating liquids. To protect the appliance, the microwave output is gradually reduced to 600 watts during the first few minutes. Maximum output is made available after a cooling period.

Default settings

The appliance suggests a cooking time for each microwave power setting. You can accept this value or change it in the relevant area.

8.4 Intervals for the time settings

The interval for setting a cooking time in microwave operation changes with the length of the cooking time.

Cooking time	Interval
0–1 minutes	5 seconds
1-3 minutes	10 seconds
3–15 minutes	30 seconds
15 minutes – 1 hour	1 minute
1 hour – 1 hour 30 minutes	5 minutes

8.5 Configuring the microwave settings

ATTENTION!

Operating the appliance without food in the cooking compartment may lead to overloading.

- Do not switch on the microwave unless there is food inside. The only exception to this rule is when performing a short cookware test.

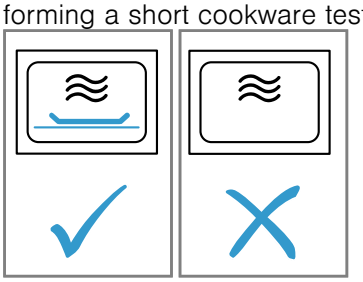

1. Read the safety instructions → *Page 4* and the section on how to prevent material damage → *Page 6*.
2. Set the function selector to ≋.
   - ✔ The appliance is ready to use. The display shows the maximum microwave output ≋ as a default value.
3. To set the required microwave output setting, press ≋.
   - ✔ The microwave output setting is highlighted and a default cooking time is shown on the display.
4. Use the rotary selector to set the required cooking time.
5. Press start▷stop to start.
   You can change the cooking time at any time during operation using the rotary selector.
   - ✔ The cooking time starts to count down and the microwave starts.
   - ✔ The start▷stop LED lights up.

Note: Once the cooking time has elapsed, the appliance stops the microwave operation and a signal sounds.

8.6 Setting the cooking time

1. Set an operating mode.
2. Press ◷ until ◷ is highlighted.
3. Use the rotary selector to set the required cooking time.
4. Press start▷stop.
   - ✔ The appliance starts heating.
   - ✔ start▷stop lights up.
   - ✔ You can see the cooking time counting down.

8.7 Changing the microwave output setting

- Press ≋ until the required setting is selected on the display.

Note: Touching it several times switches the output settings from the highest to the lowest level.
If the microwave function is only added after starting, the appliance pauses. Press start▷stop to start.

8.8 Pausing the operation

1. Press start▷stop or open the appliance door.
   - ✔ The appliance stops the operation.
   - ✔ start▷stop flashes.
2. Close the appliance door.
3. Press start▷stop.
   - ✔ The appliance continues the operation.
   - ✔ start▷stop lights up.

8.9 Stopping operation

You can stop operation at any time.

- Turn the function selector to the off position.
  The fan may continue to run after operation has been paused or stopped.
  - ✔ The appliance stops any ongoing functions.

8.10 Heating and drying the cooking compartment

Always dry the cooking compartment after operation to ensure that no moisture remains.

1. Allow the appliance to cool down.

2. Remove the worst of the food residues from the cooking compartment immediately.
3. Wipe away any moisture from the cooking compartment floor.
4. Use the function selector to select ▢.
5. Press ◷ twice.
✔ ◷ is highlighted on the display.
6. Use the rotary selector to set a time of 15 minutes.
7. Press start▷stop to start.
✔ The drying process starts and ends after 15 minutes.
8. Open the appliance door for 1 to 2 minutes to allow the steam to escape.

8.11 Drying the cooking compartment by hand

Always dry the cooking compartment after operation to ensure that no moisture remains.

1. Allow the appliance to cool down.
2. Remove the worst of the food residues from the cooking compartment.
3. Dry the cooking compartment with a sponge.
4. Leave the appliance door open for 1 hour so that the cooking compartment dries completely.

9 MicroCombi

You can combine the microwave function with the grill and steam function.
MicroCombi mode can be used with the following functions:

- Steam
- Full-surface grill
- Centre-area grill

Exceptions:

- Microwave output of 1000 watts

9.1 Setting MicroCombi

Switch on microwave mode in addition to a type of heating.

1. Set the function selector to a combinable type of heating.
✔ The display shows a default value.
2. Set the required steam setting or grill setting.
3. To set the required microwave output setting, press ▤.
✔ The display shows a default value for the cooking time.
4. Use the rotary selector to set the cooking time.
5. Press start▷stop to start.
✔ The cooking time counts down and the operation starts.
✔ You can see the cooking time counting down.
✔ start▷stop lights up.
✔ Once the cooking time has elapsed, the appliance stops the operation and a signal sounds.

9.2 Changing the microwave output setting

▶ Press ▤ until the required setting is selected on the display.

Note: Touching it several times switches the output settings from the highest to the lowest level.
If the microwave function is only added after starting, the appliance pauses. Press start▷stop to start.

9.3 Pausing the operation

1. Press start▷stop or open the appliance door.
✔ The appliance stops the operation.
✔ start▷stop flashes.
2. Close the appliance door.
3. Press start▷stop.
✔ The appliance continues the operation.
✔ start▷stop lights up.

9.4 Stopping operation

You can stop operation at any time.

▶ Turn the function selector to the off position.
The fan may continue to run after operation has been paused or stopped.
✔ The appliance stops any ongoing functions.

10 Grill

You can brown or gratinate your food using the grill.
You can use the grill on its own or in combination with the microwave.

10.1 Setting the grill

1. Set the function selector to ▢ or ▢.
2. Set a grill setting using the rotary selector.
✔ The display shows the grill setting.
3. Use the rotary selector to set the required cooking time.
4. Press start▷stop to start.
✔ The appliance starts heating. Once the appliance has heated up, slight fluctuations in temperature are normal.
✔ The temperature display lights up completely.

Note: When the time has elapsed, a signal sounds.

Grill functions

You can choose between two different grill functions, depending on the type and amount of food:

Function	Food
Full-surface grill	Use the full-surface grill to grill large pieces of meat and bread or to brown bakes.
Centre-area grill	Use the centre-area grill to grill small amounts of food. Only the centre part of the grill element becomes hot with this function.

Grill settings

The following grill settings are available.

Full-surface grill

Grill setting	Food
1 (low)	▪ Deep-dish bakes ▪ Soufflés
2 (medium)	▪ Shallow bakes ▪ Fish
3 (high)	▪ Sausages ▪ Toast

Centre-area grill

Grill setting	Food
1 (low)	For small soufflés and deep bakes.

10.2 Setting the cooking time

1. Set an operating mode.
2. Press ◷ until ◷ is highlighted.
3. Use the rotary selector to set the required cooking time.
4. Press start▷stop.

✔ The appliance starts heating.
✔ start▷stop lights up.
✔ You can see the cooking time counting down.

10.3 Changing the grill setting

Once the grill function has been selected or the operation has been started, you can still change the grill setting at any time.

▶ Use the rotary selector to change the grill setting.
✔ The cooking time remains unchanged.

10.4 Pausing the operation

1. Press start▷stop or open the appliance door.

✔ The appliance stops the operation.
✔ start▷stop flashes.

2. Close the appliance door.
3. Press start▷stop.

✔ The appliance continues the operation.
✔ start▷stop lights up.

10.5 Stopping operation

You can stop operation at any time.

▶ Turn the function selector to the off position.
The fan may continue to run after operation has been paused or stopped.
✔ The appliance stops any ongoing functions.

11 Steam

You can use the steam function on its own or in combination with the grill function and the microwave function. To ensure optimum use of the steam function, remove the wire rack. Insert the glass tray at shelf position 3 and insert the steam container into the glass tray.

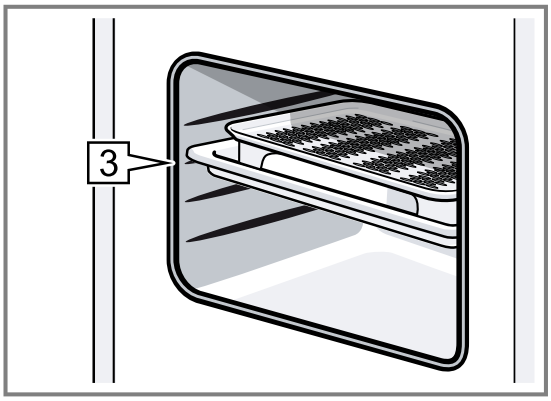

Note: You will hear a humming noise during operation. This noise is caused by the pump. It is a normal operating noise.

11.1 Steam settings

Different intensity levels are available when using the steam function.
You can select the steam settings using ♨. The display shows the selected steam setting.

Steam setting	Food
1 (low)	For defrosting vegetables, meat, fish and fruit
2 (medium)	For preparing desserts, fish and sausages
3 (high)	For cooking vegetables, fish, side dishes, for extracting juice from fruit and for blanching

11.2 Setting the steam

Note: If you have not used the appliance for an extended period, start by running a rinse cycle ♨.
→ *"Rinsing", Page 28*

⚠ **WARNING – Risk of scalding!**
Hot steam may escape when you open the appliance door. Steam may not be visible, depending on the temperature.
- ▸ Open the appliance door carefully.
- ▸ Keep children at a safe distance.

⚠ **WARNING – Risk of burns!**
The water tank may heat up while the appliance is in operation.
- ▸ Wait until the water tank has cooled down from the previous operation.
- ▸ Remove the water tank from the tank recess.

1. Use the function selector to select ⊡.
- ✔ The appliance is ready to use.
- ✔ The maximum steam setting and a cooking time of 20 minutes are set as the default values.
- ✔ The arrow next to ⊻ flashes.
2. Remove the water tank, fill with fresh water up to the "MAX" mark and insert fully in the tank recess.
   → *"Filling the water tank", Page 19*
3. Press ⊡ until the required power level is reached.
- ✔ The display shows the selected steam setting.
4. Use the rotary selector to set the required cooking time.
   You can also adjust the cooking time first and then the steam setting.
5. Press start▷stop to start.
- ✔ The arrow for ⊻ goes out and the symbol without the arrow lights up.
- ✔ start▷stop lights up,
- ✔ The temperature display lights up completely.
- ✔ The cooking time counts down on the display. The amount of time a tankful of water will last varies depending on the steam setting.

Notes
- When the time has elapsed, a signal sounds.
- If the water tank runs out of water while the appliance is in operation, the appliance is paused and the arrow of the water tank symbol ⊻ flashes. Fill the water tank with fresh water up to the "MAX" mark and press start▷stop to resume operation.
- You can use ⊡ to change the steam setting at any time when the appliance is in operation.
- After cooking with steam, wipe out the drip trough and the cooking compartment.
  → *"After using steam operation", Page 20*

11.3 Steam combined operation

With some types of heating, you can switch on the steam function. When you cook with added steam, the appliance introduces steam into the cooking compartment at various intervals and with varying degrees of intensity. This gives you a better cooking result.
Your food
- becomes crispy on the outside.
- develops a glossy surface.
- is succulent and tender on the inside.
- only undergoes a minimal reduction in volume.

Steam combined operation can be used with the following functions:
- ▤ Microwave
- ▢ Full-surface grill
- ▢ Centre-area grill

Setting the steam combined operation

Switch on microwave mode in addition to a type of heating.
1. Set the function selector to a combinable type of heating.
- ✔ The display shows a default value for the temperature.
2. Use the rotary selector to set the required setting
3. Press ⊡ until the required setting is selected on the display.
- ✔ The water tank symbol ⊻ appears on the display.
4. Fill the water tank.
5. Press start▷stop to start.
- ✔ The cooking time counts down and the operation starts.
- ✔ You can see the cooking time counting down.
- ✔ start▷stop lights up.
- ✔ Once the cooking time has elapsed, the appliance stops the operation and a signal sounds.

Notes
- If the water tank is empty, the appliance continues to operate but without added steam. Nothing appears on the display.
- Opening the appliance door affects the cooking result. Always keep the appliance door closed when cooking.

Changing the steam setting

- ▸ Press ⊡ until the required setting appears on the display.

Note: Repeatedly pressing this switches through the settings, from the highest to the lowest setting. After the lowest setting, the steam function is deactivated. Press again to activate the steam function, starting at the highest setting.

11.4 Pausing the operation

1. Press start▷stop or open the appliance door.
- ✔ The appliance stops the operation.
- ✔ start▷stop flashes.
2. Close the appliance door.
3. Press start▷stop.
- ✔ The appliance continues the operation.
- ✔ start▷stop lights up.

11.5 Stopping operation

You can stop operation at any time.
- ▸ Turn the function selector to the off position.
  The fan may continue to run after operation has been paused or stopped.
- ✔ The appliance stops any ongoing functions.

11.6 Filling the water tank

The water tank is located to the right behind the tank cover, below the appliance door. Before starting an operation with steam, open the tank cover and fill the water tank with water.

⚠ **WARNING – Risk of fire!**

Due to the hot surfaces, vapours from flammable liquids may catch fire in the cooking compartment (explosion). The appliance door may spring open. Hot steam and jets of flame may escape.

- ▸ Do not pour flammable liquids (e.g. alcoholic drinks) into the water tank.
- ▸ Only fill the water tank with water or with the descaling solution we have recommended.

⚠ **WARNING – Risk of burns!**

The water tank may heat up while the appliance is in operation.

- ▸ Wait until the water tank has cooled down from the previous operation.
- ▸ Remove the water tank from the tank recess.

Requirement: The water hardness must be set correctly.

→ *"Setting the water hardness", Page 13*

1. Press on the centre of the tank cover.

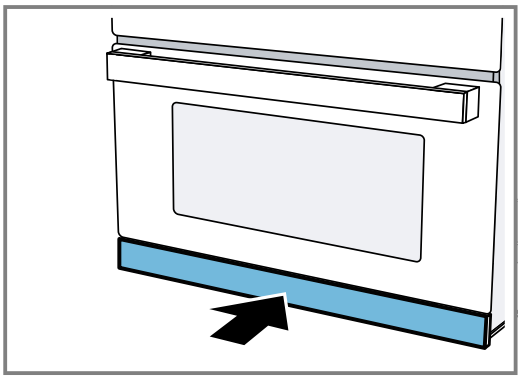

✔ The tank cover opens.

2. Remove the water tank from the tank recess.

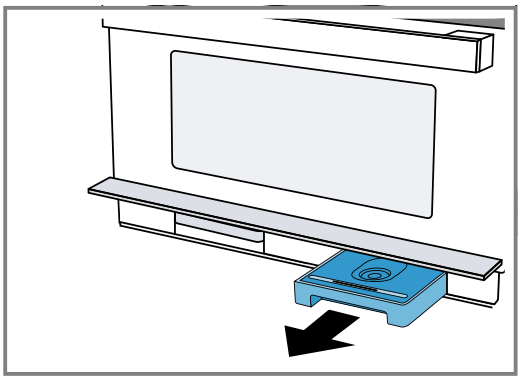

3. Fill the water tank with cold water up to the "MAX" mark.

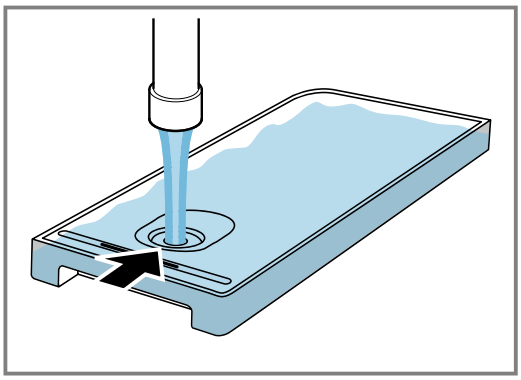

4. Place the water tank into the tank recess and slide it in fully.

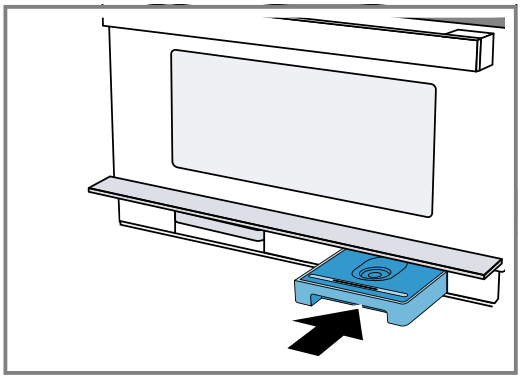

5. Close the tank cover.

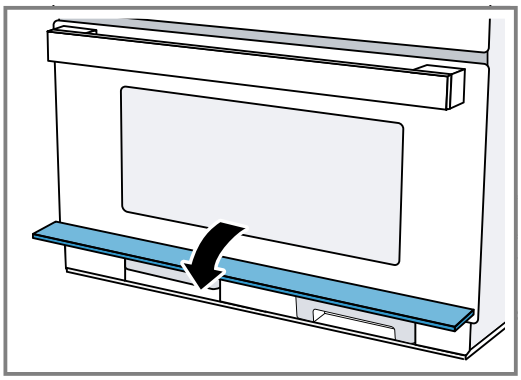

11.7 Refilling the water tank

Notes

- The way the appliance responds if the water tank runs dry when the appliance is in operation depends on what operating mode it is in:
  - Steam operation: The appliance interrupts the operation. The display shows a message. At the highest steam setting, a tankful of water will last around 30-40 minutes; at the lower steam settings, it will last much longer.
  - Steam with microwave: The appliance interrupts the operation. A tankful of water will last around 50 minutes.
  - Grill with steam: The appliance continues to operate using the grill. No message appears on the display. At the highest steam setting, a tankful of water will last around 3 hours; at the lower steam settings, it will last much longer.
- Actual times may vary from those specified.

1. Open the control panel.
2. Remove the water tank.
3. Fill the water tank up to the "MAX" mark.
4. Insert the full water tank and close the control panel.

11.8 After using steam operation

Moisture will remain in the cooking compartment. Carefully wipe out the drip trough and the cooking compartment.
Each time you cook using steam, we recommend that you run the Rinse cleaning function. Then empty and dry the water tank and drip tray.

Note: Remove limescale marks with a cloth soaked in vinegar, then wipe with clean water and dry with a soft cloth.

Rinsing the appliance

To ensure that your appliance stays clean, you can pump water through the pipe system. The appliance then drains the water into the drip tray.

Note: After running the rinse cycle, loosened limescale particles may be in the collecting container. This is normal and does not affect operation.

1. Use the function selector to select .
✔ The display shows the programme duration. You cannot change the duration.
2. Open the tank cover.
3. Remove the drip tray and empty it.
4. Slide the empty drip tray in fully.
5. Remove and empty the water tank and drain any residual water.
6. Rinse out the water tank thoroughly and fill it with fresh water.
7. Slide the water tank in fully.
8. Close the tank cover.
9. Press start▷stop.
✔ The appliance pumps water through the pipes.
✔ The time remaining counts down in the display.
✔ An audible signal sounds once this time has elapsed.
10. Empty the drip tray.

Emptying the water tank

⚠ **WARNING – Risk of burns!**
The water tank may heat up while the appliance is in operation.
- Wait until the water tank has cooled down from the previous operation.
- Remove the water tank from the tank recess.

ATTENTION!
Cleaning the water tank in the dishwasher will damage it.
- Do not clean the water tank in the dishwasher.
- Clean the water tank with a soft cloth and standard washing-up liquid.

1. Press on the centre of the tank opening.
✔ The tank cover hinges upwards.
2. Pull out the water tank.
3. Carefully remove the lid of the water tank.
4. Empty the water tank, clean it with detergent and then rinse it thoroughly with clean water.
5. Dry all parts with a soft cloth.
6. Rub the seal on the lid until dry.
7. Leave the water tank to dry with the lid open.
8. Place the lid on the water tank and push down on it.
9. Slide the water tank in fully.
10. Close the tank cover and briefly press on the centre of it.
✔ The tank cover is locked.

Drying the drip trough

⚠ **WARNING – Risk of burns!**
The appliance becomes hot during operation.
- Allow the appliance to cool down before cleaning.

Requirement: The cooking compartment has cooled down.

1. Open the appliance door.
2. Open the tank cover.
3. Remove the water tank and drip tray.
4. **Note:**
The drip trough a is underneath the cooking compartment.

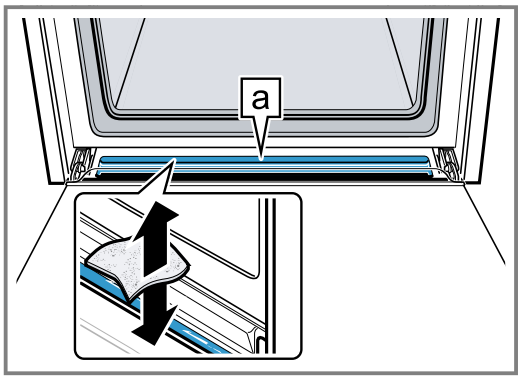

Soak up the water in the drip trough a with a sponge cloth and wipe it carefully.

Heating and drying the cooking compartment

Always dry the cooking compartment after operation to ensure that no moisture remains.

1. Allow the appliance to cool down.
2. Remove the worst of the food residues from the cooking compartment immediately.
3. Wipe away any moisture from the cooking compartment floor.
4. Use the function selector to select .
5. Press twice.
✔ is highlighted on the display.
6. Use the rotary selector to set a time of 15 minutes.
7. Press start▷stop to start.
✔ The drying process starts and ends after 15 minutes.
8. Open the appliance door for 1 to 2 minutes to allow the steam to escape.

Drying the cooking compartment by hand

Always dry the cooking compartment after operation to ensure that no moisture remains.

1. Allow the appliance to cool down.
2. Remove the worst of the food residues from the cooking compartment.
3. Dry the cooking compartment with a sponge.
4. Leave the appliance door open for 1 hour so that the cooking compartment dries completely.

12 Automatic programmes

Automatic programmes can help you prepare different dishes by selecting the optimal settings automatically.

12.1 Tips on configuring the settings for dishes

Follow these tips to achieve optimal cooking results.

- Only use food that is in perfect condition.
- Only use meat at refrigerator temperature.
- Only use frozen food straight from the freezer.
- Take the food out of its packaging and weigh it. If you cannot set the exact weight on the appliance, round the weight up or down.
- Place the food in the cold cooking compartment.
- Always use microwave-safe, heat-resistant cookware, for example made of glass or ceramic.

12.2 Overview of dishes

The appliance prompts you to enter the weight. You can only enter weights within the intended weight range.

Defrost

Tip: Stick the programme sticker to your appliance. You can therefore access the programmes faster and more easily.

No.	Food	Accessories	Shelf position	Weight range in kg	Information
P01	Minced beef, lamb or pork[1, 2]	Shallow cookware without lid	0	0.10 - 1.20	After turning, remove any meat that has already defrosted.
P02	Fish fillet[1, 2]	Shallow cookware without lid	0	0.10 - 1.00	Fillet of pike, cod, ocean perch, pollock, pike-perch
P03	Chicken pieces on the bone[1, 2]	Shallow cookware without lid	0	0.15 - 1.20	Arrange the chicken portions skin-side down.
P04	Bread slices[1, 2]	Shallow cookware without lid	0	0.10 - 0.50	Wheat bread, wheat-rye bread, wholemeal bread; bread should only be defrosted in the required amounts. Bread quickly becomes stale. If possible, separate the slices of bread.

[1] Observe the signals given when it is time to turn the food.
[2] Use microwave-safe cookware.

Poultry, meat, fish

No.	Food	Accessories	Shelf position	Weight range in kg	Information
P05	Fish fillet, fresh[1]	Steam container + glass tray	3	0.20 - 0.50	
P06	Fish fillet, frozen[1]	Steam container + glass tray	3	0.20 - 0.50	Use fish fillets of equal thickness.

[1] Fill the water tank.

Vegetables, side dishes

No.	Food	Accessories	Shelf position	Weight range in kg	Information
P07	Broccoli, fresh[1]	Steam container + glass tray	3	0.10 - 1.00	
P08	Peas, frozen[1]	Steam container + glass tray	3	0.10 - 1.00	
P09	Sliced carrots, fresh[1]	Steam container + glass tray	3	0.10 - 0.75	The thicker the slices, the firmer the result. If you want the meal to be cooked right through, enter a higher weight. This extends the programme duration.
P10	Green asparagus, fresh[1]	Steam container + glass tray	3	0.10 - 0.70	Do not place on top of each other.
P11	Rice[2, 3]	Deep cookware with lid	0	0.10 - 0.50	Only use long grain rice. Do not use any boil-in-the-bag rice. Add 2 to 3 parts water to one part rice. After the programme has ended, leave the rice to stand for 5 - 10 minutes.
P12	Boiled potatoes[3, 1]	Steam container + glass tray	3	0.20 - 0.50	Peel and dice the potatoes. The larger the pieces, the firmer the result.
P13	Fruit compote[3, 1, 2]	Steam container + glass tray	3	0.30 - 0.80	Add some sugar and cinnamon to the fruit. For berry compotes, do not add raspberries and strawberries until you are prompted to stir the fruit.

[1] Fill the water tank.
[2] Observe the signals given when it is time to stir the food.
[3] Use microwave-safe cookware.

Convenience

No.	Food	Accessories	Shelf position	Weight range in kg	Information
P14	Reheat plated meal, chilled	Shallow cookware on glass tray	3	0.20 - 0.50	
P15	Reheat plated meal, frozen	Shallow cookware on glass tray	3	0.20 - 0.50	

12.3 Applying settings for dishes

1. Set the function selector to ⊞.
✔ The display shows the first dish number and a default value for the weight.
2. Use the rotary selector to set the required weight.
3. Press ⊞.
✔ The weight setting is highlighted on the display.
4. Turn the rotary selector to set the weight.
Before starting, you can use ⊞ and ⊞ to switch between the dish and the weight.
✔ The appliance automatically sets the right cooking time.
5. Press start▷stop.
Once you have started the programme, you can no longer change the dish or the weight. You can use ⊞ to display the set weight.
✔ The appliance starts.
✔ start▷stop lights up.
✔ You will see the cooking time counting down.
✔ When the time has elapsed, a signal sounds.
6. Turn the function selector to the zero setting.

Note: Before starting, you can use ⊞ and ⊞ to switch between programmes and weight.
Once you have started the programme, you can no longer change the programme number or the weight. You can check the set weight using ⊞.

12.4 Changing the dish

1. Press start▷stop for 4 seconds or open the appliance door.
✔ The dish is reset
2. Select a new dish.

12.5 Pausing operation

You can pause operation at any time.

1. Press start▷stop or open the appliance door.
✔ Operation is paused.
✔ start▷stop flashes.
2. To continue operation, close the appliance door and press start▷stop.
✔ Operation continues.
✔ start▷stop lights up.

12.6 Stopping operation

You can stop operation at any time.

▶ Turn the function selector to the off position.
The fan may continue to run after operation has been paused or stopped.
✔ The appliance stops any ongoing functions.

13 Time-setting options

Your appliance features time-setting options that you can use to set the cooking time and the timer.

13.1 Overview of the time-setting options

Your appliance has various time-setting options. You can use ◷ to call up the menu and switch between the individual functions. The symbols for the available functions light up on the display and the function that you just selected is highlighted.

Time-setting option	Use
Timer ⌛	You can set the timer to run independently of the appliance during operation. It does not affect the appliance. A signal sounds once a timer duration has elapsed.
Cooking time ◷	Once the set cooking time has elapsed, the appliance will automatically stop heating. You can only call up the cooking time using ◷ after setting a type of heating. An audible signal sounds once the time has elapsed.
Clock ◷	When no other function is running in the foreground, the appliance shows you the time of day on the display.

Note: You can cancel the audible signal early by pressing ◷. You can change how long the audible signal sounds for in the basic settings → *Page 24*.

13.2 Checking the time-setting options

Requirement: If several time-setting options are set, the corresponding symbols light up on the display. You can see the cooking time counting down. During operation, the timer and cooking time are available. In standby, the timer and the time are available.

▶ Press ◷ until ◷, or ◷ is highlighted.
✔ The respective value is shown on the display.

13.3 Setting the timer

1. Press ◷.
✔ ⌛ and the time symbols light up on the display.
2. Use the rotary selector to set the timer duration.
✔ After a few seconds, the time setting is adopted.
✔ The timer starts.
✔ ⌛ lights up on the display and the timer counts down. The other time symbols go out.
✔ An audible signal sounds once the timer duration has elapsed. --:-- is shown on the display.
3. You can use any field to switch off the timer.

13.4 Changing the timer

▶ Use the rotary selector to change the timer duration.
✔ After a few seconds, the appliance displays the set timer duration.

13.5 Cancelling the timer

▶ Use the rotary selector to set the timer duration to --:--.
✔ The timer is switched off.

13.6 Setting the cooking time

1. Press ◷ twice.
✔ --:-- is shown on the display and the time symbols light up.
2. Set a cooking time using the rotary selector.
3. Press start▷stop.
✔ The appliance starts the operation.
✔ The cooking time counts down on the display and start▷stop lights up. The other time symbols go out.
✔ An audible signal sounds once the cooking time has elapsed. The appliance stops heating. --:-- is shown on the display.
4. Press ◷ to stop the signal.
5. To switch off the appliance, turn the function selector to the zero setting.

13.7 Changing the cooking time

▶ Change the cooking time using the rotary selector.
✔ After a few seconds, the display shows the changed cooking time.
✔ You will see the cooking time counting down.

13.8 Clearing the cooking time

Note: With the timer function set, you must first press ◷ to change the cooking time.

▶ Use the rotary selector to set the cooking time to --:--.
✔ The appliance applies the change after a few seconds.

13.9 Setting the time

During initial use, the time display is highlighted. 12:00 flashes on the display and ◷ lights up.

1. Set the time using the rotary selector.
2. Press ◷.
✔ The time is set.

13.10 Changing the time

Requirement: The appliance is switched off.

1. Press ◷ twice.
✔ The display shows ◷ and the time.
2. Set the time using the rotary selector.
3. Press ◷.
✔ The time is set.

Note: If you do not press ◷ after setting the time, the appliance automatically applies the set value after a few seconds.
If you have changed the position of the function selector while configuring the settings, you can only use the appliance once you turn the function selector to the zero setting.
To reduce the standby consumption of your appliance, you can hide the clock.

14 Childproof lock

You can secure your appliance to prevent children from accidentally switching it on or changing the settings.

14.1 Activating the childproof lock

Requirement: The appliance is switched off.

▶ Press and hold ⊶ for approximately 4 seconds.
✔ The control panel is locked.
✔ ⊶ appears on the display.

Note: If you have set a timer duration ⌛, this continues to count down. While the childproof lock is active, the timer duration cannot be changed.
You can end the signal tones by touching any field.

14.2 Deactivating the childproof lock

▶ Press and hold ⊶ for approximately 4 seconds.
✔ The control panel is unlocked.

15 Basic settings

You can configure the basic settings for your appliance to meet your needs.

15.1 Overview of the basic settings

Here you can find an overview of the basic settings and factory settings. The basic settings depend on the features of your appliance.

Display	Basic setting	Selection	Description
c01	Signal duration	1 = short = 10 seconds 2 = medium = 30 seconds[1] 3 = long = 2 minutes	Set the signal duration for after a cooking time elapses or the timer reaches zero.

[1] Factory setting (may vary according to model)

Display	Basic setting	Selection	Description
c02	Button tone	0 = off 1 = on[1]	Switch the button tones on or off.
c03	Display brightness	1 = low 2 = medium[1] 3 = high	Set the brightness of the display.
c04	Time indicator	0 = off 1 = on[1]	Show the clock time in the display.
c05	Interior lighting	0 = off 1 = on[1]	Switch the interior lighting on or off.
c06	Water hardness	0 = softened 1 = soft 2 = moderate 3 = hard 4 = very hard[1]	Set the water hardness → *Page 13*.
c07	Factory setting	0 = off[1] 1 = on	Reset the changed settings to the factory settings.
c08	Demo mode	0 = off[1] 1 = on	Switch demo mode on or off. **Note:** Demo mode is only visible in the first 5 minutes after connecting the appliance to the mains.

[1] Factory setting (may vary according to model)

15.2 Changing the basic settings

Requirement: The appliance is switched off.

1. Press and hold ◷ for a few seconds.
✔ The first basic setting is shown on the display.
2. Use the rotary selector to change the basic setting.
3. Press ◷.
✔ The next basic setting is shown on the display.
4. Use ◷ to select all of the required basic settings and change the values.
5. To save the changes, press and hold ◷ for a few seconds.

Note: The changes to the basic settings will be retained even after a power cut.

15.3 Discarding changes to the basic settings

▸ Turn the function selector.
✔ All changes are discarded and not saved.

16 Cleaning and servicing

To keep your appliance working efficiently for a long time, it is important to clean and maintain it carefully.

16.1 Tips on caring for your appliance

Follow the tips on appliance care to make sure your appliance functions properly at all times.

Measure	Advantage
Always keep the appliance clean and remove dirt immediately. Always clean the cooking compartment after use.	Prevents dirt from accumulating and burning on.
Remove limescale, grease, starch and albumin (e.g. egg white) stains immediately.	Prevents corrosion.
Use the glass tray for baking very moist cakes.	Keeps the cooking compartment cleaner.
Use suitable cookware for roasting, e.g. a roasting dish.	Keeps the cooking compartment cleaner.

16.2 Cleaning products

Only use suitable cleaning agents.

⚠ **WARNING – Risk of electric shock!**

An ingress of moisture can cause an electric shock.

▸ Do not use steam- or high-pressure cleaners to clean the appliance.

ATTENTION!
Unsuitable cleaning agents damage the surfaces of the appliance.
- Do not use harsh or abrasive cleaning products.
- Do not use cleaning products with a high alcohol content.
- Do not use hard scouring pads or cleaning sponges.
- Do not use any special cleaners for cleaning the appliance while it is hot.
- Only use glass cleaners, glass scrapers or stainless steel care products if recommended in the cleaning instructions for the relevant part.

New sponge cloths contain residues from production.
- Wash new sponge cloths thoroughly before use.

You can find out which cleaning products are suitable for each surface or part of the appliance in the individual cleaning instructions.

16.3 Cleaning the appliance

Clean the appliance as specified. This will ensure that the different parts and surfaces of the appliance are not damaged by incorrect cleaning or unsuitable cleaning products.

⚠ **WARNING – Risk of burns!**
The appliance and its parts that can be touched become hot during use.
- Caution should be exercised here in order to avoid touching heating elements.
- Young children under 8 years of age must be kept away from the appliance.

⚠ **WARNING – Risk of fire!**
Loose food remnants, fat and meat juices may catch fire.
- Before using the appliance, remove the worst of the food residues and remnants from the cooking compartment, heating elements and accessories.

⚠ **WARNING – Risk of injury!**
Scratched glass in the appliance door may develop into a crack.
- Do not use any harsh or abrasive cleaners or sharp metal scrapers to clean the glass on the appliance door, as they may scratch the surface.

1. Read the information on cleaning products.
   → *Page 25*
2. Observe the information on cleaning the appliance components or surfaces.
3. Unless otherwise specified:
   – Clean the components of the appliance with hot soapy water and a dish cloth.
   – Dry with a soft cloth.

16.4 Cleaning the front of the appliance

ATTENTION!
Incorrect cleaning may damage the front of the appliance.
- Do not use glass cleaner, metal scrapers or glass scrapers for cleaning.
- To prevent corrosion on stainless steel fronts, remove any limescale, grease, starch and albumin (e.g. egg white) stains immediately.
- On stainless steel surfaces, use special stainless steel cleaning products suitable for hot surfaces.

1. Read the information on cleaning products.
   → *Page 25*
2. Clean the front of the appliance using hot soapy water and a dish cloth.
   Note: Slight differences in colour on the front of the appliance are caused by the use of different materials, such as glass, plastic and metal.
3. For stainless steel appliance fronts, apply a thin layer of the stainless steel cleaning product with a soft cloth.
   You can obtain the stainless steel cleaning products from the after-sales service or the online shop.
4. Dry with a soft cloth.

16.5 Cleaning the control panel

ATTENTION!
Incorrect cleaning may damage the control panel.
- Never wipe the control panel with a wet cloth.

1. Read the information on cleaning products.
   → *Page 25*
2. Clean the control panel using a microfibre cloth or a soft, damp cloth.
3. Dry with a soft cloth.

16.6 Cleaning the door panels

ATTENTION!
Incorrect cleaning may damage the door panes.
- Do not use a glass scraper.

1. Read the information on cleaning products.
   → *Page 25*
2. Clean the door panels with a soft dish cloth and glass cleaner.
   Note: Shadows on the door panels, which look like streaks, are caused by reflections made by the interior lighting.
3. Dry with a soft cloth.

16.7 Cleaning the door handle

1. Read the information on cleaning products.
   → *Page 25*
2. Clean the door handle with hot soapy water and a soft dish cloth.
   Note: If descaler comes into contact with the door handle, wipe it off immediately. Otherwise, it will no longer be possible to remove these stains.
3. Dry with a soft cloth.

16.8 Cleaning the door seal

ATTENTION!
Incorrect cleaning may damage the door seal.
- Do not use metal scrapers or glass scrapers for cleaning.
- Do not use abrasive cleaning agents.

1. Read the information on cleaning products.
   → *Page 25*
2. Clean the door seal with hot soapy water and a soft dish cloth.
3. Dry with a soft cloth.

16.9 Cleaning the stainless steel surfaces

1. Read the information on cleaning products.
   → *Page 25*
2. Clean using a dish cloth and hot soapy water.
3. Dry with a soft cloth.
4. Check the position of the door seal after cleaning it.

16.10 Cleaning the cooking compartment

ATTENTION!
Incorrect cleaning may damage the cooking compartment.
- Do not use oven spray, abrasive materials or other aggressive oven cleaners.

1. Read the information on cleaning products.
   → *Page 25*
2. Clean with hot soapy water or a vinegar solution.
3. Use oven cleaner to remove very heavy soiling. Only use oven cleaner when the cooking compartment is cold.

   Tip: To eliminate unpleasant odours, heat up a cup of water with a few drops of lemon juice for 1 to 2 minutes at maximum microwave power setting. Always place a spoon in the container to prevent delayed boiling.
4. Wipe out the cooking compartment with a soft cloth.
5. Leave the cooking compartment to dry with the door open.

16.11 Cleaning the accessories

1. Read the information on cleaning products.
   → *Page 25*
2. Soften baked-on food remnants with a damp dish cloth and hot soapy water.
3. Clean the accessory with hot soapy water and a soft dish cloth or a scrubbing brush.
4. Clean the wire rack with stainless steel cleaner or in the dishwasher.
   Use steel wool or oven cleaner to remove very heavy soiling.
5. Dry with a soft cloth.

16.12 Cleaning the drip tray

ATTENTION!
Heat may damage the drip tray.
- Do not dry the drip tray in the hot cooking compartment.
- Do not clean the drip tray in the dishwasher.

1. Read the information on cleaning products.
   → *Page 25*
2. Clean the drip tray using a dish cloth and hot soapy water.
3. Rinse thoroughly with clean water.
4. Dry with a soft cloth.
5. Leave the drip tray to dry with the lid open.
6. Rub the seal on the lid until dry.

16.13 Cleaning the water tank

1. Read the information on cleaning products.
   → *Page 25*
2. Clean the water tank using a dish cloth and hot soapy water.
3. Rinse thoroughly with clean water.
4. Dry with a soft cloth.
5. Leave the water tank to dry with the lid open.
6. Rub the seal on the lid until dry.

16.14 Cleaning the tank recess

1. Read the information on cleaning products.
   → *Page 25*
2. Wipe the tank recess dry after every use.

16.15 Cleaning the steam outlet in the cooking compartment

1. Read the information on cleaning products.
   → *Page 25*
2. Clean the steam outlet in the cooking compartment with hot soapy water and a cleaning sponge or soft washing-up brush.

16.16 Cleaning function

You can use the cleaning function to clean the appliance.

Descaling

To ensure that your appliance continues to operate correctly, it must be descaled regularly.
How frequently you need to run the descaling programme depends on the water hardness and how many times you have used the steam-assisted operations. By showing on the display, the appliance indicates when only another 5 or fewer steam-assisted operations are possible. If you do not carry out descaling, you can no longer set any operation with steam.
Descaling will take around 32 minutes in total.
Descaling consists of two automatic steps.
- Descaling, duration approx. 31 minutes
- Rinse cycle after descaling, duration approx. 1 minute

For reasons of hygiene, the descaling programme must be run in full.
If you interrupt the descaling programme, you can no longer set any operation with steam. To ensure that the appliance is ready for operation again, run the rinse cycle.

Starting the descaling process

It takes around 31 minutes to descale your appliance.

ATTENTION!
Using non-recommended descaler may damage the appliance
- Only use the descaler recommended by us for the descaling programme. The length of time for which the descaler is left to work is based on this product.

If descaling solution comes into contact with the control panel or other delicate surfaces, it will damage them.
- Remove descaling solution immediately with water.

1. Use the function selector to select .
✔ The display shows the duration of the descaling programme. You cannot change the duration.
2. Open the tank cover.
3. Remove the drip tray and empty it.
4. Slide the empty drip tray in fully.
5. Remove the water tank.
6. Mix water with descaler to make a descaling solution.
   – Mix 250 ml water with 50 ml liquid descaler to make a descaling solution, or dissolve a descaling tablet, weight 18 g, in 250 ml water for 5 minutes.
7. Pour the descaling solution into the water tank and slide the water tank in fully.
8. Close the tank cover.
9. Press start▷stop
✔ The appliance is descaled.
✔ The remaining time counts down on the display.
✔ Once the descaling programme has run through to the end, an audible signal sounds. The appliance pauses.
10. Open the tank cover.
11. Remove the drip tray, empty it and slide it in.
12. Remove the water tank, rinse it thoroughly, fill it with fresh water and slide it in.
13. Close the tank cover.
14. Press start▷stop
✔ The appliance is rinsed automatically twice. Once the rinse cycle has run through to the end, an audible signal sounds.

Note: Observe the mixing ratio for the descaler.
Liquid descaler (order number 00311680): Mixing ratio of 1:5, mix 50 ml descaler with 250 ml water.
Descaling tablets (order number 00311864): Dissolve one descaling tablet, weight 18 g, in 250 ml water for 5 minutes.

Rinsing

If you have not used the steam function for a long time, rinse the appliance.
To ensure that your appliance stays clean, you can pump water through the pipe system. The appliance then drains the water into the drip tray.

Note: After running the rinse cycle, loosened limescale particles may be in the collecting container. This is normal and does not affect operation.

Running the rinse cycle

1. Use the function selector to select .
✔ The display shows the programme duration. You cannot change the programme duration.
2. Open the tank cover.
3. Remove the drip tray and empty it.
4. Slide the empty drip tray in fully.
5. Remove and empty the water tank and drain any residual water.
6. Rinse out the water tank thoroughly and fill it with fresh water.
7. Slide the water tank in fully.
8. Close the tank cover.
9. Press start▷stop.
✔ Water is pumped through the pipes.
✔ The time remaining counts down in the display.
✔ An audible signal sounds once this time has elapsed.

Subsequent cleaning

Carry out the following steps after every descaling programme or rinse cycle.
1. Open the tank cover.
2. Empty, clean and dry the drip tray and water tank.
3. Turn the function selector to the zero setting.
✔ The process is complete and the appliance is ready for use.

Emptying the drip tray

With the cleaning functions, the residual water is collected in the drip tray. Then empty and dry the drip tray.

ATTENTION!
Heat may damage the drip tray.
- Do not dry the drip tray in the hot cooking compartment.
- Do not clean the drip tray in the dishwasher.

1. Briefly press on the centre of the tank cover.

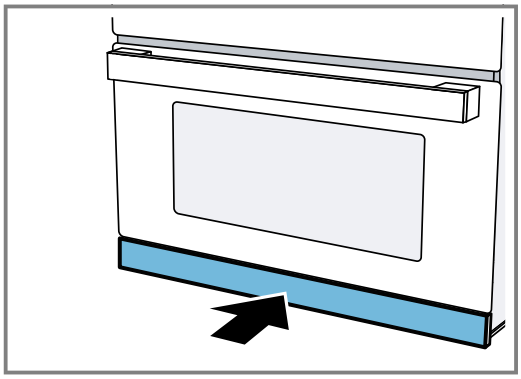

✔ The tank cover opens. The drip tray and water tank can now be accessed.
2. Remove the drip tray from the tank recess.

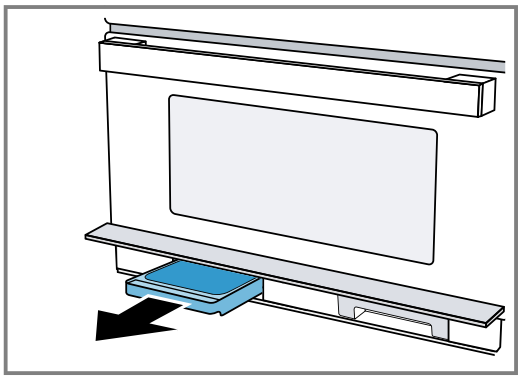

3. Open the lid for the drip tray.

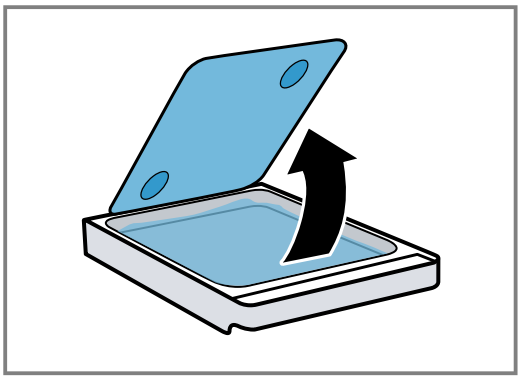

4. Empty the drip tray.

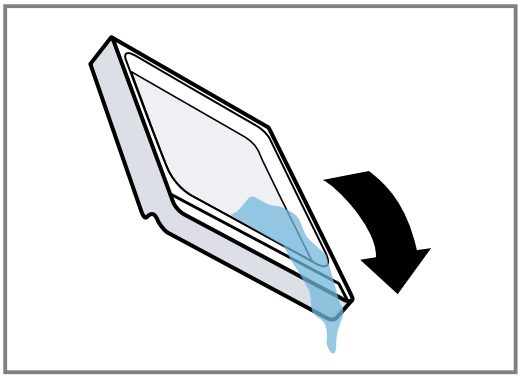

5. Insert the drip tray into the tank shaft and slide it in fully.

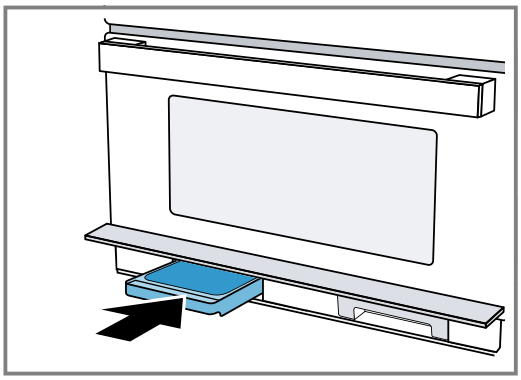

6. Close the tank cover.

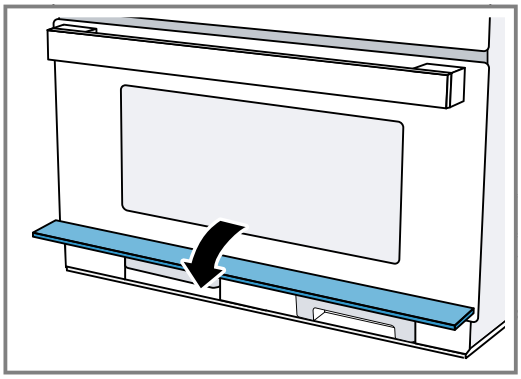

✔ The appliance is ready to use.

17 Troubleshooting

You can rectify minor faults on your appliance yourself. Read the troubleshooting information before contacting after-sales service. This will avoid unnecessary costs.

⚠ **WARNING – Risk of injury!**

Improper repairs are dangerous.

- Repairs to the appliance should only be carried out by trained specialist staff.
- If the appliance is defective, call Customer Service.

⚠ **WARNING – Risk of electric shock!**

Incorrect repairs are dangerous.

- Repairs to the appliance should only be carried out by trained specialist staff.
- Only use genuine spare parts when repairing the appliance.
- If the power cord of this appliance is damaged, it must be replaced by the manufacturer, the manufacturer's Customer Service or a similarly qualified person in order to prevent any risk.

17.1 Malfunctions

Fault	Cause and troubleshooting
The appliance is not working.	The mains plug of the power cord is not plugged in. ▸ Connect the appliance to the power supply.
	The circuit breaker in the fuse box has tripped. ▸ Check the circuit breaker in the fuse box.
	There has been a power cut. ▸ Check whether the lighting in your kitchen or other appliances are working.

Fault	Cause and troubleshooting
The appliance is not working.	Malfunction **1.** Switch off the fuse in the fuse box. **2.** Switch the fuse back on after approx. 10 seconds. ✔ If the fault was a one-off, the message disappears. **3.** If the message appears again, call the after-sales service. Please specify the exact error message when calling. → *"Customer Service", Page 31*
	Door is not fully closed. ▶ Check whether food remains or foreign material are trapped in the door.
⚿ lights up in the display and no settings can be made on the appliance.	Childproof lock is activated. ▶ Press and hold ⚿ until ⚿ goes out.
The interior lighting is not working.	The LED lamp is defective. ▶ If this fault recurs, call the after-sales service.
12:00 flashes in the display and the ◷ symbol lights up.	There has been a power cut. ▶ Reset the time. → *"Setting the time", Page 24*
The appliance is not in operation. A cooking time is shown in the display.	start▷stop has not been pressed. ▶ Press start▷stop.
Microwave not working.	Door is not fully closed. ▶ Check whether food remains or foreign material are trapped in the door.
	start▷stop has not been pressed. ▶ Press start▷stop.
Food takes longer than usual to heat up.	The microwave power setting is set too low. ▶ Set a higher microwave power setting. → *Page 15*
	You have placed a larger amount of food than normal in the appliance. ▶ Set a longer cooking time. You need double the time when you have double the amount.
	The food is colder than usual. ▶ Turn or stir the food from time to time during cooking.
Microwave mode is cancelled.	Appliance has a fault. ▶ If this fault recurs, call the after-sales service.
Appliance is not heating, colon is flashing in the display.	Demo mode is activated in the basic settings. **1.** Disconnect the appliance from power supply by briefly switching off the circuit breaker in the fuse box. **2.** Go to the basic settings → *Page 24* and deactivate Demo mode within the next 3 minutes.
The water tank and drip tray symbols are flashing continuously.	Technical problem **1.** Make sure that the water tank and drip tray are fully inserted in the relevant tank recess. **2.** If the symbols continue to flash, call our customer service. **Note:** You can continue to use the appliance, except for the steam function.
Hot air or steam escapes above the door.	Not a fault. The appliance's cooling fan is running. ▶ No action required. The fan continues to run briefly even after the operation has ended. The fan protects the appliance from overheating.
Cooling fan continues to run after the operation has ended.	The appliance must be cooled down after the operation has ended. ▶ No action required. The fan continues to run briefly even after the operation has ended. The fan protects the appliance from overheating.
Cooling fan runs while the door is open.	The appliance must be cooled during and after operation. ▶ No action required. All cooking functions are stopped when the door is opened.

Fault	Cause and troubleshooting
Steam is not visible in Hot air mode and grill combined operation.	Steam is not visible in every temperature range. The hotter the steam, the less visible it is. ▶ No action required.
Drip tray is empty after steam operation.	In normal steam operation and steam combined operation, the condensation is collected by the glass plate on the bottom and the grey drip trough in the bottom plate. It will not get into the drip tray. ▶ No action required. The drip tray is used only for the rinse cycle and descaling process, not for normal steam operation and steam combined operation.
White limescale particles are in the drip tray.	During rinsing and descaling, fine limescale particles are loosened from the boiler. **1.** Check the water hardness setting. **2.** Run the descaling programme at the specified intervals. ▶ Descale the appliance as described in the instruction manual for your appliance.
Low water consumption in combined operation. Especially when combining 3 functions.	In steam combined operation, especially when combining 3 functions, only a small amount of steam is used in some cases. This means that only a small amount of water is used from the fresh water tank. ▶ No action required.

17.2 Information on display panel

Fault	Cause and troubleshooting
The message E0532 appears on the display	Dirt on the control panel is causing a touch field to be permanently active. **1.** Switch off the appliance. **2.** Clean the control panel. **3.** Switch the appliance back on. ▶ If this fault recurs immediately after switching back on, call our customer service.
The message E5005 appears on the display	The steam function has been activated multiple times with an empty water tank. ▶ Before next use, make sure that the water tank is filled with cold water and fully inserted in the tank recess. ▶ If this fault recurs, call the after-sales service.

18 Disposal

Find out here how to dispose of old appliances correctly.

18.1 Disposing of old appliance

Valuable raw materials can be reused by recycling.

▶ Dispose of the appliance in an environmentally friendly manner.
Information about current disposal methods are available from your specialist dealer or local authority.

This appliance is labelled in accordance with European Directive 2012/19/EU concerning used electrical and electronic appliances (waste electrical and electronic equipment - WEEE).
The guideline determines the framework for the return and recycling of used appliances as applicable throughout the EU.

19 Customer Service

If you have any queries on use, are unable to rectify faults on the appliance yourself or if your appliance needs to be repaired, contact Customer Service.
Function-relevant genuine spare parts according to the corresponding Ecodesign Order can be obtained from Customer Service for a period of at least 10 years from the date on which your appliance was placed on the market within the European Economic Area.

Note: Under the terms of the manufacturer's warranty the use of Customer Service is free of charge.

Detailed information on the warranty period and terms of warranty in your country is available from our after-sales service, your retailer or on our website.
If you contact Customer Service, you will require the product number (E-Nr.) and the production number (FD) of your appliance.

The contact details for Customer Service can be found in the enclosed Customer Service directory or on our website.
This product contains light sources from energy efficiency class D. These light sources are available as a spare part and should only be replaced by trained specialist staff.

19.1 Product number (E-Nr.) and production number (FD)

You can find the product number (E-Nr.) and the production number (FD) on the appliance's rating plate. You will see the rating plate with these numbers if you open the appliance door.

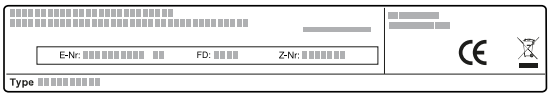

Make a note of your appliance's details and the Customer Service telephone number to find them again quickly.

20 How it works

Here, you can find the ideal settings for various dishes as well as the best accessories and cookware. We have tailored these recommendations to your appliance.

20.1 What is the best way to proceed?

In this section, you will find out the best way to proceed step-by-step in order to be able to make optimum use of the recommended settings. You will get information on many meals, with details and tips on how to best use and set your appliance.

Note: Your appliance has programmed settings for a selection of dishes. If you want to be guided by the appliance, use the automatic programmes.
→ *"Automatic programmes", Page 21*

1. Before using the appliance, remove all unnecessary cookware from the cooking compartment.
2. Select a type of food from the recommended settings.
3. Place the food in suitable cookware.
   Use the cookware and accessories listed in the recommended settings.
   Use cookware and accessories that are suitable for the cooking method.
   → *"Microwave-safe cookware and accessories", Page 14*
   Use genuine accessories for your appliance. These have been tailored to the cooking compartment and the operating modes of your appliance.
4. **Tip:** If you want to cook quantities that deviate from those specified in the tables, set approximately double the time for double the amount.
   The setting values apply to food placed in the cooking compartment while the cooking compartment is still cold.
   Preheating is necessary for selected types of food – this is indicated in the table. Do not place your food and accessory into the cooking compartment until it has finished preheating.
   Some types of food turn out best if they are cooked in multiple stages. These are indicated in the table.
   If you wish to follow one of your own recipes, you should use the settings listed in the table for similar food as reference. Additional information can be found in the tips listed after the settings tables.
   When using the microwave, always set the longest specified time but check your meal after the shortest specified time.
   Before cooking with steam, ensure that the water tank is full.
   Set the appliance according to the recommended settings.
   The temperatures and times given in the tables are guidelines and depend on the quality, temperature and consistency of the food. Settings ranges are specified for this reason. Try using the lower values to start with. You can increase the temperature next time if necessary.
5. Place your food in the cooking compartment in the appropriate shelf position.
6. ⚠ **WARNING – Risk of scalding!**
   Hot steam may escape when you open the appliance door. Steam may not be visible, depending on the temperature.
   - ▸ Open the appliance door carefully.
   - ▸ Keep children at a safe distance.

   ⚠ **WARNING – Risk of burns!**
   Heated food gives off heat. The cookware may become hot.
   - ▸ Always use oven gloves to remove cookware or accessories from the cooking compartment.

   When the dish is ready, switch off the appliance.

20.2 General cooking tips

Take note of the following information when cooking all types of food.

Condensation

When you are cooking food in the cooking compartment, a lot of steam may form in the cooking compartment.
Since your appliance is extremely energy-efficient, only a small amount of heat escapes during operation. Due to the significant differences in temperature between the appliance interior and the external parts of the appliance, condensation may build up on the appliance door, the control panel or the front panels of adjacent kitchen units. The formation of condensation is a normal physical phenomenon.
When you preheat the appliance or open the door carefully, you reduce the build-up of condensation.

Both added-steam cooking and cooking with a type of steam heating necessitate the production of large amounts of steam in the cooking compartment. Wipe the cooking compartment down once the appliance has cooled down.

Baking tins

For best results, we recommend using dark-coloured metal baking tins.
Tinplate baking tins, ceramic dishes and glass dishes extend the baking time and prevent the baked item from browning evenly.
If you are using silicone moulds, check the manufacturer's instructions to see whether they are suitable for use with microwaves or steam-assisted cooking. Use the manufacturer's instructions and recipes as a guide. Silicone moulds are often smaller than normal tins. The given quantities and recipes may vary.

Greaseproof paper

Only use greaseproof paper that is suitable for the selected temperature. Always cut the greaseproof paper to size.

⚠ **WARNING – Risk of fire!**
Opening the appliance door creates a draught. Greaseproof paper may come into contact with the heating element and catch fire.

- Never place greaseproof paper loosely over accessories when preheating the appliance and while cooking.
- Always cut greaseproof paper to size and use a plate or baking tin to hold it down.

20.3 Tips for keeping acrylamide levels low during cooking

Acrylamide is harmful to your health and is produced when you cook cereal and potato products at very high temperatures.

Dish	Tip
General	▪ Keep cooking times as short as possible. ▪ Brown dishes until they are golden brown and not too dark. ▪ Use large, thick pieces of food. These contain less acrylamide.
Baked items and biscuits	▪ Set the temperature for hot air to max. 180 °C. ▪ Brush baked items and biscuits with egg or egg yolk. This reduces the production of acrylamide.
Oven chips	▪ Spread the chips out evenly and in a single layer on the baking tray. ▪ Cook at least 400 g at once on a baking tray so that the chips do not dry out.

20.4 Tips for defrosting and heating

Follow these tips for good results when defrosting and heating.

Issue	Tip
The food should be defrosted, hot or cooked once the time has elapsed.	Set a longer cooking time. Larger quantities and food which is piled high require longer times.
Once the time has elapsed, the food should not be overheated at the edge and cooked in the middle.	▪ Stir the food occasionally. ▪ Set a lower microwave power setting and a longer cooking time.
After defrosting, poultry or meat should not be defrosted on the outside only but still frozen in the middle.	▪ Set a lower microwave power setting. ▪ If you are defrosting a large quantity, turn it several times.
The food should not be too dry.	▪ Set a lower microwave power setting. ▪ Set a shorter cooking time. ▪ Cover the food. ▪ Add more liquid.

20.5 Defrosting

With your appliance you can defrost frozen food.

Defrosting food

1. Place the frozen food in an uncovered container on the bottom of the cooking compartment.
   Delicate parts such as the drumsticks and wings of chicken or fatty outer layers of roasts can be covered with small pieces of aluminium foil. The foil must not touch the walls of the appliance.
2. Start the operation.
   You can remove the foil halfway through the defrosting time.
3. **Note:** Liquid is produced when you defrost meat and poultry.
   Drain off any liquid when turning and under no circumstances use it for other purposes or allow it to come into contact with other foods.
4. Redistribute the food or turn it once or twice as it defrosts.
   Turn large pieces of food several times.
5. To even out the temperature, leave the defrosted food to stand at room temperature for approx. 10–60 minutes.
   You can remove the giblets from poultry at this point. You can continue to cook the meat even if a small section of it is still frozen in the centre.

Recommended settings for defrosting food

Food	Accessories/cookware	Shelf position	Type of heating	Microwave setting in W	Cooking time in mins
Whole pieces of meat, on the bone or boned, 800 g	Cookware without lid	0		**1.** 180 **2.** 90	**1.** 15[1] **2.** 15-25[1]
Whole pieces of meat, on the bone or boned, 1000 g	Cookware without lid	0		**1.** 180 **2.** 90	**1.** 15[1] **2.** 25-35[1]
Whole pieces of meat, on the bone or boned, 1500 g	Cookware without lid	0		**1.** 180 **2.** 90	**1.** 20[1] **2.** 25-35[1]
Meat in pieces or slices, 200 g	Cookware without lid	0		**1.** 180 **2.** 90	**1.** 5[2] **2.** 4-6[2]
Meat in pieces or slices, 500 g	Cookware without lid	0		**1.** 180 **2.** 90	**1.** 10[2] **2.** 5-10[2]
Meat in pieces or slices, 800 g	Cookware without lid	0		**1.** 180 **2.** 90	**1.** 10[2] **2.** 10-15[2]
Minced meat, mixed, 200 g[3]	Cookware without lid	0		90	15[1, 4]
Minced meat, mixed, 500 g[3]	Cookware without lid	0		**1.** 180 **2.** 90	**1.** 5[1, 5] **2.** 10-15[1, 5]
Minced meat, mixed, 800 g[3]	Cookware without lid	0		**1.** 180 **2.** 90	**1.** 10[1, 5] **2.** 15-20[1, 5]
Poultry or poultry portions, 600 g	Cookware without lid	0		**1.** 180 **2.** 90	**1.** 5[6, 7] **2.** 10-15[6, 7]
Poultry or poultry portions, 1200 g	Cookware without lid	0		**1.** 180 **2.** 90	**1.** 10[6, 7] **2.** 20-25[6, 7]
Duck, 2000 g	Cookware without lid	0		**1.** 180 **2.** 90	**1.** 20[1, 7] **2.** 30-40[1, 7]
Goose, 4500 g	Cookware without lid	0		**1.** 180 **2.** 90	**1.** 30[8, 7] **2.** 60-80[8, 7]
Fish fillet, fish steak or slices, 400 g	Cookware without lid	0		**1.** 180 **2.** 90	**1.** 5[9] **2.** 10-15[9]
Whole fish, 300 g	Cookware without lid	0		**1.** 180 **2.** 90	**1.** 3[6] **2.** 10-15[6]
Whole fish, 600 g	Cookware without lid	0		**1.** 180 **2.** 90	**1.** 8[6] **2.** 15-25[6]
Vegetables, e.g. peas, 300 g	Cookware without lid	0		180	10-15[10]
Vegetables, e.g. peas, 600 g	Cookware without lid	0		**1.** 180 **2.** 90	**1.** 10[10] **2.** 9-15[10]
Fruit, e.g. raspberries, 300 g	Cookware without lid	0		180	7-10[10, 9]
Fruit, e.g. raspberries, 500 g	Cookware without lid	0		**1.** 180 **2.** 90	**1.** 8[10, 9] **2.** 5-10[10, 9]
Butter, defrosting, 125 g[11]	Cookware without lid	0		90	6-8
Butter, defrosting, 250 g[11]	Cookware without lid	0		**1.** 180 **2.** 90	**1.** 2 **2.** 3-5
Bread, loaf, 500 g	Cookware without lid	0		**1.** 180 **2.** 90	**1.** 3[6] **2.** 10-15[6]

[1] Turn the food several times.
[2] When turning the pieces of meat, separate them.
[3] Freeze the food flat.
[4] Remove any meat that has already defrosted.
[5] Separate any defrosted parts when turning.
[6] Turn the food occasionally.
[7] Remove the liquid that escapes during defrosting.
[8] Turn the food every 20 minutes.
[9] Separate any defrosted parts from each other.
[10] Carefully stir the food occasionally.
[11] Remove all packaging.
[12] Only defrost cakes without icing, whipped cream, gelatine or custard.
[13] Separate the pieces of cake.

Food	Accessories/cookware	Shelf position	Type of heating	Microwave setting in W	Cooking time in mins
Bread, loaf, 1000 g	Cookware without lid	0		**1.** 180 **2.** 90	**1.** 5[6] **2.** 15-25[6]
Cakes, plain, e.g. sponge cake, 500 g[12, 13]	Cookware without lid	0		90	10-15
Cakes, plain, e.g. sponge cake, 750 g[12, 13]	Cookware without lid	0		**1.** 180 **2.** 90	**1.** 3 **2.** 10-15
Cakes, moist, e.g. fruit flan, cheesecake, 500 g[12]	Cookware without lid	0		**1.** 180 **2.** 90	**1.** 5 **2.** 15-25
Cakes, moist, e.g. fruit flan, cheesecake, 750 g[12]	Cookware without lid	0		**1.** 180 **2.** 90	**1.** 7 **2.** 15-25

[1] Turn the food several times.
[2] When turning the pieces of meat, separate them.
[3] Freeze the food flat.
[4] Remove any meat that has already defrosted.
[5] Separate any defrosted parts when turning.
[6] Turn the food occasionally.
[7] Remove the liquid that escapes during defrosting.
[8] Turn the food every 20 minutes.
[9] Separate any defrosted parts from each other.
[10] Carefully stir the food occasionally.
[11] Remove all packaging.
[12] Only defrost cakes without icing, whipped cream, gelatine or custard.
[13] Separate the pieces of cake.

20.6 Heating

With your appliance you can heat food.

Heating frozen food

⚠ **WARNING – Risk of burns!**

Heated food gives off heat. The cookware may become hot.

- Always use oven gloves to remove cookware or accessories from the cooking compartment.

1. Take ready meals out of the packaging and place in microwave-safe cookware.
2. Distribute the food flat in the cookware.
   Food that is in contact with the bottom will cook more quickly than food that is piled up. Do not layer pieces of food on top of each other.
3. Cover the food with a suitable lid, a plate or special microwave foil.
4. Place the cookware on the bottom of the cooking compartment.
5. Start the operation.
6. Turn or stir the food 2 to 3 times during this time. The speed at which different components of the meal heat up may vary.
7. To even out the temperature, leave the heated food to stand at room temperature for approx. 2 to 5 minutes.

Recommended settings for heating frozen food

Food	Accessories/cookware	Shelf position	Type of heating	Microwave setting in W	Cooking time in mins
Soup, frozen, 400 g	Cookware with lid	0		600	8-15
Stew, frozen, 500 g	Cookware with lid	0		600	8-13
Stew, frozen, 1000 g	Cookware with lid	0		600	20-25
Menu, plated meal, ready meal with 2-3 components, frozen, 300-400 g	Cookware with lid	0		600	11-15
Slices or pieces of meat in sauce, e.g. goulash, frozen, 500 g	Cookware with lid	0		600	12-17[1]

[1] Separate the pieces of meat when stirring.
[2] Add a little liquid to the food.
[3] Pour water into the dish so that it covers the base.
[4] Cook the food without any additional water.
[5] Stir the food occasionally.

Food	Accessories/cookware	Shelf position	Type of heating	Microwave setting in W	Cooking time in mins
Slices or pieces of meat in sauce, e.g. goulash, frozen, 1000 g	Cookware with lid	0		600	25-30[1]
Bakes, e.g. lasagne, cannelloni, frozen, 450 g	Cookware with lid	0		600	10-15
Side dishes, e.g. rice, pasta, frozen, 250 g[2]	Cookware with lid	0		600	2-5
Side dishes, e.g. rice, pasta, frozen, 500 g[2]	Cookware with lid	0		600	8-10
Vegetables, e.g. peas, broccoli, carrots, frozen, 300 g[3]	Cookware with lid	0		600	8-10
Vegetables, e.g. peas, broccoli, carrots, frozen, 600 g[3]	Cookware with lid	0		600	14-17
Creamed spinach, frozen, 500 g[4]	Cookware with lid	0		600	11-16[5]

[1] Separate the pieces of meat when stirring.
[2] Add a little liquid to the food.
[3] Pour water into the dish so that it covers the base.
[4] Cook the food without any additional water.
[5] Stir the food occasionally.

Heating food

⚠ WARNING – Risk of burns!

Heated food gives off heat. The cookware may become hot.

- Always use oven gloves to remove cookware or accessories from the cooking compartment.

⚠ WARNING – Risk of scalding!

There is a possibility of delayed boiling when a liquid is heated. This means that the liquid reaches the boiling temperature without the usual steam bubbles rising to the surface. Exercise caution even when only gently shaking the container. The hot liquid may suddenly boil over and splatter.

- Always place a spoon in the container when heating liquids. This prevents delayed boiling.

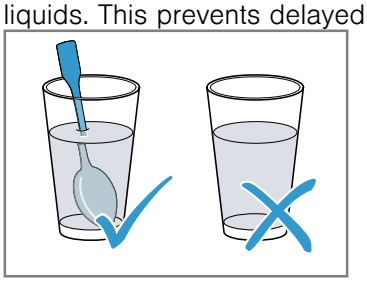

ATTENTION!

Metal touching the wall of the cooking compartment will cause sparks, which may damage the appliance or the inner door pane.

- Metal (e.g. a spoon in a glass) must be kept at least 2 cm from the cooking compartment walls and the inside of the door.

1. Take ready meals out of the packaging and place in microwave-safe cookware.
2. Distribute the food flat in the cookware.
   Food that is in contact with the bottom will cook more quickly than food that is piled up. Do not layer pieces of food on top of each other.
3. Cover the food with a suitable lid, a plate or special microwave foil, if this is specified in the table.
4. Place the cookware on the bottom of the cooking compartment.
   If you are using the steam function, place your cookware on the glass tray in shelf position 3 and fill the water tank.
5. Start the operation.
6. Turn or stir the food several times during cooking. The speed at which different components of the meal heat up may vary.
7. Check the temperature.
8. To even out the temperature, leave the heated food to stand at room temperature for approx. 2 to 5 minutes.

Recommended settings for heating food

Food	Accessories/cookware	Shelf position	Type of heating	Microwave setting in W	Steam setting	Cooking time in mins
Baby food, e.g. baby bottles, 150 ml[1]	Cookware without lid	0		360	-	0.5-1.5[2, 3]
Drinks, 200 ml[4]	Cookware without lid	0		1000	-	1-2[5, 6]
Drinks, 500 ml[4]	Cookware without lid	0		1000	-	4-5[5, 6]
Soup, 2 cups, 175 g each	Cookware without lid	0		600	-	3-4
Soup, 4 cups, 175 g each	Cookware without lid	0		600	-	6-8
Fish or pieces of meat in sauce, 500 g[7]	Cookware with lid	0		600	-	7-10
Menu, plated meal, ready meal with 2-3 components, frozen, 400 g	Cookware without lid	0	+	360	3	9-14
Stew, 400 g	Cookware with lid	3		600	-	6-8
Stew, 800 g	Cookware with lid	0		600	-	8-11
Vegetables, 150 g	Cookware without lid	3	+	360	3	3-5
Vegetables, 300 g	Cookware without lid	3	+	360	3	4-7

[1] Heat up baby food without the teat or lid.
[2] Always shake the food well after heating.
[3] Always check the temperature.
[4] Place a spoon in the glass.
[5] Do not overheat alcoholic drinks.
[6] Check the food occasionally.
[7] Separate the slices of meat.

20.7 Bread and bread rolls

You can bake bread and bread rolls using your appliance.

Tips for cooking frozen products

- Carefully take the food out of the packaging.
- Remove any ice on the food.
  Do not use frozen products that are covered with a thick layer of ice.
- Some frozen products may be unevenly pre-baked. Uneven browning may remain even after baking.

Recommended settings for bread and bread rolls

Food	Accessories/cookware	Shelf position	Type of heating	Temperature in °C	Grill setting	Steam setting	Cooking time in mins
Bread for toasting, 12 slices	Wire rack	3		**1.** - **2.** -	**1.** 3 **2.** 3	**1.** - **2.** -	**1.** 3-5 **2.** 2-3
Bread for toasting, 4 slices	Wire rack	3		**1.** - **2.** -	**1.** 3 **2.** 3	**1.** - **2.** -	**1.** 5-6 **2.** 3-4
Toast with topping, 2-4 slices	Wire rack + Glass tray	3+1		-	3	-	8-10

20.8 Poultry, meat and fish

You can use your appliance to cook poultry, meat and fish.

Recommended settings for poultry

Food	Accessories/ cookware	Shelf position	Type of heating	Temperature in °C	Grill setting	Microwave setting in W	Steam setting	Cooking time in mins
Chicken, whole, cooked, 1.3 kg	Cookware with lid	0		-	-	600	-	25-35[1]
Duck breast, 500 g	Wire rack + Glass tray	3+2	+ +	-	3	180	3	10-12[2, 3]
Goose breast, goose legs, 700-900 g	Cookware without lid	0	+	-	2	180	-	30-40[4, 3]

[1] Turn the dish halfway through the cooking time.
[2] Place with the skin side up.
[3] Do not turn the food.
[4] Use deep cookware without a lid.

Recommended settings for meat

Food	Accessories/ cookware	Shelf position	Type of heating	Temperature in °C	Grill setting	Microwave setting in W	Steam setting	Cooking time in mins
Beef steaks, 2-3 cm thick, 2-3 pieces, 200 g each	Wire rack + Glass tray	3+1		**1.** - **2.** -	**1.** 3 **2.** 3	**1.** - **2.** -	**1.** - **2.** -	**1.** 10-15 **2.** 5-10
Pork neck steaks, 2-3 cm thick, 2-3 pieces, 120 g each	Wire rack + Glass tray	3+1		**1.** - **2.** -	**1.** 2 **2.** 2	**1.** - **2.** -	**1.** - **2.** -	**1.** 15-20 **2.** 10-15
Grilling sausages, x 4-6, 150 g each	Wire rack + Glass tray	3+1		**1.** - **2.** -	**1.** 3 **2.** 3	**1.** - **2.** -	**1.** - **2.** -	**1.** 10-15 **2.** 5-10

Recommended settings for fish

Food	Accessories/ cookware	Shelf position	Type of heating	Temperature in °C	Grill setting	Microwave setting in W	Steam setting	Cooking time in mins
Fish fillet, fresh, 400 g	Glass tray + Steam container	3		-	-	-	3	15-17
Fish fillet pieces, frozen, 400 g	Cookware with lid	3		-	-	-	3	18-20
Fish fillet pieces, frozen, 800 g	Glass tray + Steam container	3		-	-	-	3	23-25
Fish fillet, au gratin, 500 g	Cookware without lid	0	+	-	3	600	-	10-15

Food	Accessories/ cookware	Shelf position	Type of heating	Temperature in °C	Grill setting	Microwave setting in W	Steam setting	Cooking time in mins
Fish steaks, x 2-3, 150 g each	Wire rack + Glass tray	3+1		-	3	-	-	8-12
Fish, whole, e.g. trout, x 2-3, 300 g each	Glass tray + Steam container	3		-	-	-	3	18-22

20.9 Vegetables and side dishes

You can use your appliance to cook vegetables and side dishes.

Recommended settings for vegetables and side dishes

Food	Accessories/ cookware	Shelf position	Type of heating	Temperature in °C	Microwave setting in W	Steam setting	Cooking time in mins
Artichokes, whole, fresh	Glass tray + Steam container	3		-	-	3	35-40
Spinach leaves, fresh, 250 g	Glass tray + Steam container	3		-	-	3	5-7
Cauliflower, whole, fresh	Glass tray + Steam container	2		-	-	3	28-35
Broccoli, whole, fresh, 500 g	Glass tray + Steam container	2		-	-	3	20-23
Broccoli florets, frozen, 500 g	Glass tray + Steam container	3		-	-	3	14-16
Vegetables, fresh, 250 g	Cookware with lid	0		-	600	-	6-10[1]
Vegetables, fresh, 500 g	Cookware with lid	0		-	600	-	10-15[1]
Mixed vegetables, frozen, 250 g	Glass tray + Steam container	3		-	-	3	12-15
Carrots, sliced, steamed, 500 g	Glass tray + Steam container	3		-	-	3	18-20
Sliced leeks, fresh, 500 g	Glass tray + Steam container	3		-	-	3	10-12
Green beans, fresh, 500 g	Glass tray + Steam container	3		-	-	3	18-20

[1] Stir the food occasionally.

Food	Accessories/ cookware	Shelf position	Type of heating	Temperature in °C	Microwave setting in W	Steam setting	Cooking time in mins
Asparagus, green, 250 g	Glass tray + Steam container	3		-	-	3	10-15
Courgettes, sliced, steamed, 500 g	Glass tray + Steam container	3		-	-	3	12-14
Potatoes, quartered, 250 g	Glass tray + Steam container	3		-	-	3	28-30
Potatoes, quartered, 500 g	Glass tray + Steam container	3		-	-	3	30-32
Potatoes, quartered, 750 g	Glass tray + Steam container	3		-	-	3	32-35
125 g rice + 300 ml water	Cookware with lid	0		-	**1.** 600 **2.** 180	**1.** - **2.** -	**1.** 4-6 **2.** 12-15
250 g rice + 500 ml water	Cookware with lid	0		-	**1.** 600 **2.** 180	**1.** - **2.** -	**1.** 6-8 **2.** 15-18

[1] Stir the food occasionally.

20.10 Desserts

You can use your appliance to prepare desserts.

Recommended settings for desserts

Food	Accessories/cookware	Shelf position	Type of heating	Microwave setting in W	Steam setting	Cooking time in mins
Crème caramel	Glass tray + Soufflé dishes	3		-	3	40-50
Steamed yeast dumplings	Glass tray	3		-	2	20-25
Rice pudding 1:2.5[1]	Glass tray	3		-	3	30-40
Fruit, compote, 500 g	Glass tray	3		-	3	9-12
Microwave popcorn, 1 x 100 g bag	Cookware with lid	0		600	-	3-5
Desserts, e.g. instant blancmange, 500 ml	Cookware with lid	0		600	-	6-8[2]

[1] Add milk in the specified ratio.
[2] Stir the food occasionally.

20.11 Test dishes

These overviews have been produced for test institutes to facilitate appliance testing in accordance with EN 60350-1:2013 or IEC 60350-1:2011 and EN 60705:2012, IEC 60705:2010.

Microwave cooking

Please take note of the following information if you are cooking test dishes using the microwave.
Use heat-resistant, microwave-safe cookware.

Recommended settings for defrosting food using the microwave

Food	Accessories/cookware	Shelf position	Type of heating	Microwave setting in W	Cooking time in mins
Defrosting meat, 500 g	Cookware without lid	0		**1.** 180 **2.** 90	**1.** 7 **2.** 8-12

Recommended settings for cooking food using the microwave

Food	Accessories/cookware	Shelf position	Type of heating	Microwave setting in W	Cooking time in mins
Custard, 1000 g	Cookware without lid	0		**1.** 360 **2.** 180	**1.** 18-20 **2.** 18-22
Sponge cake, 475 g	Cookware without lid	0		600	8-10
Meatballs, 900 g	Cookware without lid	0		600	20-25

Recommended settings for cooking in combination with the microwave

Food	Accessories/ cookware	Shelf position	Type of heating	Temperature in °C	Grill setting	Microwave setting in W	Cooking time in mins
Potato gratin	Cookware without lid	0	+	-	1	360	25-32

Steaming

Please take note of the following information if you are steaming test dishes.

Place the glass tray with steam container on shelf position 3.

Recommended settings for steaming

Food	Accessories/cookware	Shelf position	Type of heating	Steam setting	Cooking time in mins
Peas, frozen, 1000 g	Glass tray + Steam container	3		3	-[1]
Broccoli, fresh, 300 g	Glass tray + Steam container	3		3	10-12
Broccoli, fresh, one container	Glass tray + Steam container	3		3	16-18

[1] The test is over when 85 °C is reached at the coldest spot (see IEC 60350-1).

Grilling

Please take note of the following information if you are grilling test dishes.

- Place the glass dish underneath the wire rack. The liquid will be caught and the cooking compartment stays cleaner.
- The recommended settings apply to dishes placed into the non-preheated appliance.

Recommended settings for grilling

Food	Accessories/cookware	Shelf position	Type of heating	Grill setting	Cooking time in mins
Toast, browned	Wire rack	3		3	4-5
Beef burgers, x 12	Wire rack + Glass tray	3+1		3	35-45[1]

[1] Turn the dish halfway through the cooking time.

21 Installation instructions

Observe this information when installing the appliance.

21.1 Safe installation

Follow these safety instructions when installing the appliance.

- The appliance can only be used safely if it is correctly installed according to the safety instructions. The installer is responsible for ensuring that the appliance works perfectly at its installation location.
- Check the appliance for damage after unpacking it. Do not connect the appliance if it has been damaged in transit.
- Before starting up the appliance, remove any packaging material and adhesive film from the cooking compartment and the door.
- Proceed in accordance with the installation sheets for installing accessories.
- Fitted units must be temperature-resistant up to 90 °C, and adjacent unit fronts up to 65 °C.
- Do not install the appliance behind a decorative door or the door of a kitchen unit. There is a risk of overheating.
- Cut-out work on the units should be carried out before installing the appliance. Remove any shavings. Otherwise, the correct operation of electrical components may be adversely affected.
- Only a licensed professional may connect appliances without plugs. Damage caused by incorrect connection is not covered under the warranty.

⚠ WARNING – Risk of injury!

Parts that are accessible during installation may have sharp edges and may lead to cutting injuries.

- Wear protective gloves

⚠ WARNING – Risk of fire!

It is dangerous to use an extended power cord and non-approved adapters.

- Do not use extension cables or multiple socket strips.
- If the power cord is too short, contact Customer Service.
- Only use adapters approved by the manufacturer.

21.2 Appliance dimensions

You will find the dimensions of the appliance here

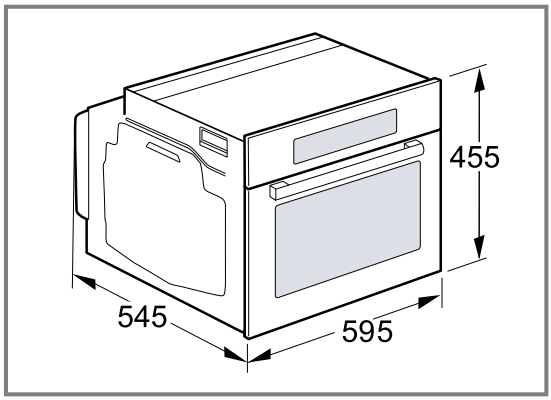

21.3 Fitted units

This appliance is only intended to be fully fitted in a kitchen. It is not intended to be used as a tabletop appliance or within a cupboard.
Ensure that the fitted cabinet behind the appliance does not have a back panel. Maintain a clearance of at least 35 mm between the wall and the cabinet base or the rear panel of the cabinet situated above.
Ensure that the fitted cabinet has a ventilation opening of 50 cm² on the front. To create a ventilation opening, trim the base panel or fit a ventilation grille.

Ensure that surround units without a ventilation cut-out have a ventilation opening measuring 200 cm² towards the rear of the side panels.
Do not cover the ventilation slots and air intake openings.
Ensure that the wall socket is located in the hatched area [a] or outside of the installation space.
Secure any unsecured units to the wall using a standard bracket [b].

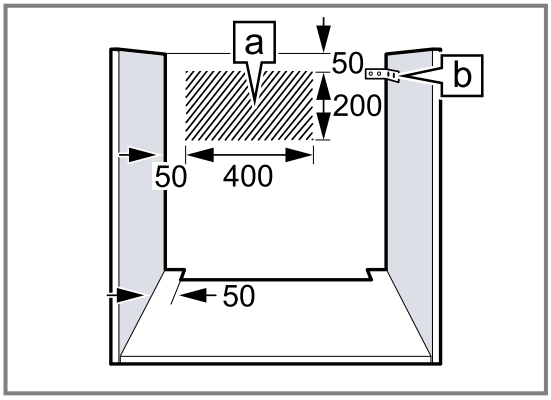

21.4 Installation below a worktop

Observe the installation dimensions and the safety clearances when installing below a worktop.
To ventilate the appliance, the intermediate floor must have a ventilation cut-out.

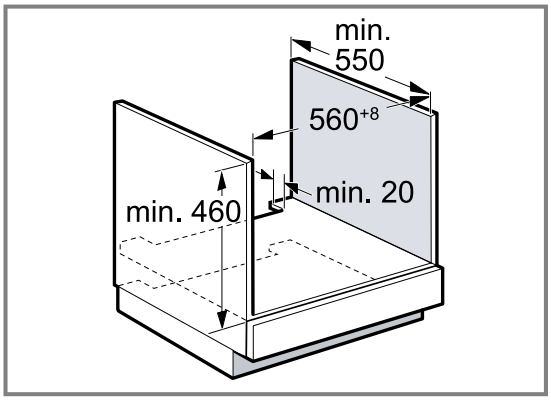

The worktop must be secured to the fitted unit.

21.5 Installing below a hob

If the appliance is installed below a hob, the following minimum dimensions must be adhered to (including substructure, if applicable).

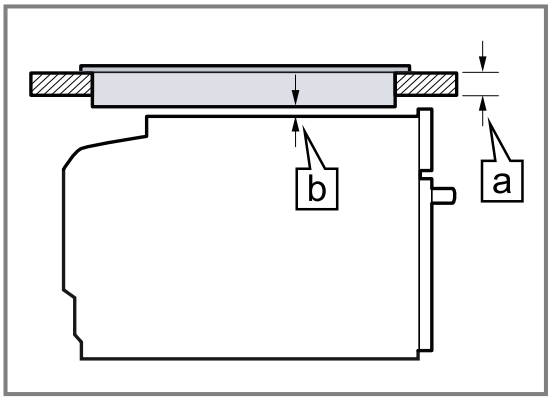

The required minimum worktop thickness [b] is based on the required minimum clearance [a].

Hob type	[a] raised in mm	[a] flush in mm	[b] in mm
Induction hob	48	49	5
Full-surface induction hob	58	59	5

Observe the installation instructions for the hob.

Note: Not suitable for installing under a gas hob or electric hob.

21.6 Installation in a tall unit

Observe the installation dimensions and the safety clearances in a tall unit.
To ventilate the appliance, the intermediate floor must have a ventilation cut-out.

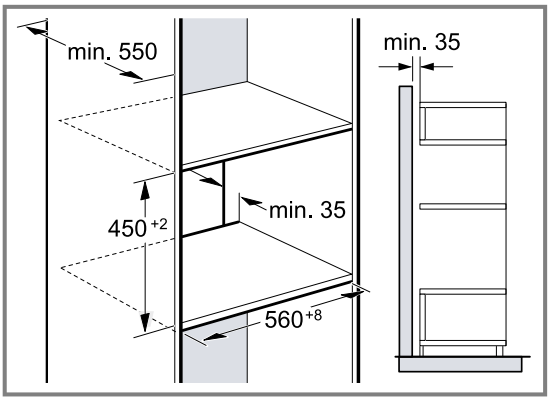

If the tall unit has another back panel in addition to the element back panels, this must be removed.
Do not fit the appliance too high up; it must be possible for accessories to be removed easily.

21.7 Combination with a warming drawer

First fit the warming drawer. Follow the installation instructions for the warming drawer.
Slide the appliance, on the warming drawer, into the fitted cabinet. When sliding in the appliance, do not damage the warming drawer's panel.

21.8 Corner installation

Observe the installation dimensions and the safety clearances when installing in a corner.

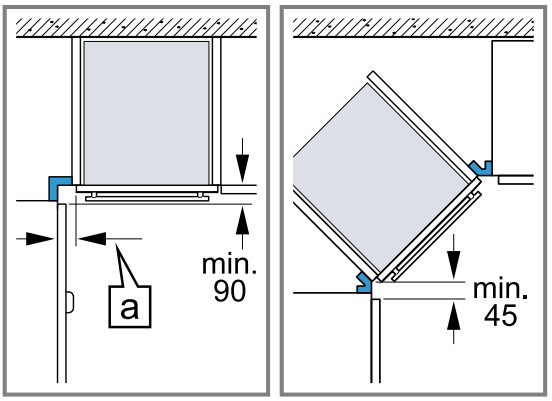

To ensure that the appliance door can be opened, you must take the minimum dimensions into consideration when installing in a corner. The dimension a is dependent on the thickness of the unit front and the handle.

21.9 Electrical connection

In order to safely connect the appliance to the electrical system, follow these instructions.

⚠ **WARNING – Danger: Magnetism!**
The appliance contains permanent magnets. These may affect electronic implants, e.g. heart pacemakers or insulin pumps.

- ▸ Persons with electronic implants must stay at least 10 cm away from the appliance.

- The appliance corresponds to protection class I and must only be operated with a protective earth connection.
- The fuse protection must correspond to the power rating specified on the appliance's rating plate and to the local regulations.
- The appliance must be disconnected from the power supply whenever installation work is being carried out.
- If the power cable is damaged, it must be replaced by the manufacturer, customer service or a person with equivalent qualifications in order to eliminate any risks.
- Contact protection must be guaranteed by the installation.

Connecting the appliance to the electricity supply

Note: The appliance must only be connected to a protective contact socket that has been correctly installed.

1. Insert the non-heating appliance plug of the power cable into the appliance.
   Check that the non-heating appliance plug is inserted properly.
2. Insert the mains plug of the appliance into a nearby socket.
   Ensure that the mains plug of the mains power cable is easily accessible after installation of the appliance. If free access to the mains plug of the power cable is not possible, an all-pole isolating switch must be installed in the permanent electrical installation according to the installation regulations.

Electrically connecting an appliance without a protective contact plug

Note: Only a licensed professional may connect the appliance. Damage caused by incorrect connection is not covered under the warranty.
An all-pole isolating switch must be integrated into the permanent electrical installation according to the installation regulations.

1. Identify the phase and neutral conductors in the socket.
   The appliance may be damaged if it is not connected correctly.
2. Connect the hob in accordance with the connection diagram.
   See the rating plate for the voltage.
3. Connect the wires of the mains power cable according to the colour coding:
   - Green/yellow = Protective conductor ⏚
   - Blue = Neutral conductor
   - Brown = Phase (external conductor)

21.10 Installing the appliance

1. Use a spirit level to adjust the appliance so that it is perfectly level.
2. Push the appliance in fully.
3. Align the appliance horizontally and centrally.
4. Screw the appliance tightly onto the unit.

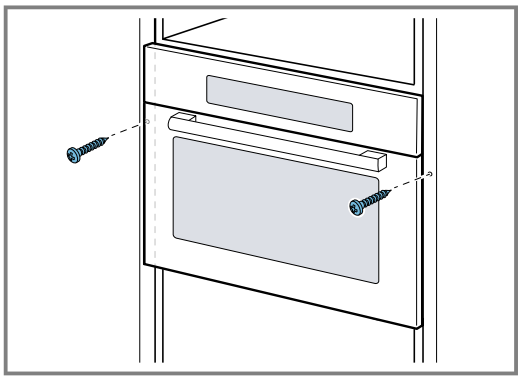

5. Remove any packaging material and adhesive film from the cooking compartment and the door.

Note: Do not close the gap between the worktop and the appliance using additional battens.
Do not attach any thermal insulation strips to the side panels of the surround unit.

21.11 Removing the appliance

1. Disconnect the appliance from the power supply.
2. Undo the fastening screws.
3. Lift the appliance slightly and pull it out completely.

Thank you for buying a Bosch Home Appliance!

Register your new device on MyBosch now and profit directly from:

- **Expert tips & tricks for your appliance**
- **Warranty extension options**
- **Discounts for accessories & spare-parts**
- **Digital manual and all appliance data at hand**
- **Easy access to Bosch Home Appliances Service**

Free and easy registration – also on mobile phones:
www.bosch-home.com/welcome

Looking for help? You'll find it here.

Expert advice for your Bosch home appliances, help with problems or a repair from Bosch experts.
Find out everything about the many ways Bosch can support you:
www.bosch-home.com/service
Contact data of all countries are listed in the attached service directory.

Robert Bosch Hausgeräte GmbH
Carl-Wery-Straße 34
81739 München
GERMANY
www.bosch-home.com

9001686154 (011105)
en

Valid within Great Britain:
Imported to Great Britain by
BSH Home Appliances Ltd.
Grand Union House
Old Wolverton Road
Wolverton, Milton Keynes
MK12 5PT
United Kingdom