BOSCH

Register your new device on MyBosch now and get free benefits:
bosch-home.com/welcome

MyBosch

Oven

HBG633B.1

[en] User manual and installation instructions

Futher information and explanations are available online:

Table of contents

USER MANUAL

1 Safety 2
2 Preventing material damage 4
3 Environmental protection and saving energy 5
4 Familiarising yourself with your appliance 5
5 Types of heating 8
6 Accessories 8
7 Before using for the first time 10
8 Basic operation 10
9 Rapid heating 11
10 Time-setting options 11
11 Childproof lock 13
12 Sabbath mode 13
13 Basic settings 13
14 Cleaning and servicing 14
15 Cleaning assistance 16
16 Rails 17
17 Appliance door 17
18 Troubleshooting 20
19 Disposal 22
20 Customer Service 23
21 How it works 23

22 INSTALLATION INSTRUCTIONS 27
22.1 General installation instructions 27

1 Safety

Observe the following safety instructions.

1.1 General information

- Read this instruction manual carefully.
- Keep the instruction manual and the product information safe for future reference or for the next owner.
- Do not connect the appliance if it has been damaged in transit.

1.2 Intended use

This appliance is designed only to be built into kitchen units. Read the special installation instructions.
Only a licensed professional may connect appliances without plugs. Damage caused by incorrect connection is not covered under the warranty.
Only use this appliance:
- To prepare meals and drinks.
- In private households and in enclosed spaces in a domestic environment.
- Up to an altitude of max. 4000 m above sea level.

1.3 Restriction on user group

This appliance may be used by children aged 8 or over and by people who have reduced physical, sensory or mental abilities or inadequate experience and/or knowledge, provided that they are supervised or have been instructed on how to use the appliance safely and have understood the resulting dangers.
Children must not play with the appliance.
Children must not perform cleaning or user maintenance unless they are at least 15 years old and are being supervised.
Keep children under the age of 8 years away from the appliance and power cable.

1.4 Safe use

Always place accessories in the cooking compartment the right way round.
→ *"Accessories", Page 8*

⚠ WARNING – Risk of fire!

Combustible objects that are left in the cooking compartment may catch fire.
- ▸ Never store combustible objects in the cooking compartment.

- If smoke is emitted, the appliance must be switched off or the plug must be pulled out and the door must be held closed in order to stifle any flames.

Loose food remnants, fat and meat juices may catch fire.

- Before using the appliance, remove the worst of the food residues and remnants from the cooking compartment, heating elements and accessories.

Opening the appliance door creates a draught. Greaseproof paper may come into contact with the heating element and catch fire.

- Never place greaseproof paper loosely over accessories when preheating the appliance and while cooking.
- Always cut greaseproof paper to size and use a plate or baking tin to hold it down.

⚠ WARNING – Risk of burns!

The appliance and its parts that can be touched become hot during use.

- Caution should be exercised here in order to avoid touching heating elements.
- Young children under 8 years of age must be kept away from the appliance.

Accessories and cookware get very hot.

- Always use oven gloves to remove accessories or cookware from the cooking compartment.

When the cooking compartment is hot, any alcoholic vapours inside may catch fire.

- Only use small quantities of drinks with a high alcohol content in food.
- Open the appliance door carefully.

⚠ WARNING – Risk of scalding!

The accessible parts of the appliance become hot during operation.

- Never touch these hot parts.
- Keep children at a safe distance.

Hot steam may escape when you open the appliance door. Steam may not be visible, depending on the temperature.

- Open the appliance door carefully.
- Keep children at a safe distance.

If there is water in the cooking compartment when it is hot, this may create hot steam.

- Never pour water into the cooking compartment when the cooking compartment is hot.

⚠ WARNING – Risk of injury!

Scratched glass in the appliance door may develop into a crack.

- Do not use any harsh or abrasive cleaners or sharp metal scrapers to clean the glass on the oven door, as they may scratch the surface.

The hinges on the appliance door move when the door is opened and closed, which could trap your fingers.

- Keep your hands away from the hinges.

Components inside the appliance door may have sharp edges.

- Wear protective gloves.

⚠ WARNING – Risk of electric shock!

Incorrect repairs are dangerous.

- Repairs to the appliance should only be carried out by trained specialist staff.
- Only use genuine spare parts when repairing the appliance.
- If the power cord of this appliance is damaged, it must be replaced by trained specialist staff.

If the insulation of the power cord is damaged, this is dangerous.

- Never let the power cord come into contact with hot appliance parts or heat sources.
- Never let the power cord come into contact with sharp points or edges.
- Never kink, crush or modify the power cord.

An ingress of moisture can cause an electric shock.

- Do not use steam- or high-pressure cleaners to clean the appliance.

If the appliance or the power cord is damaged, this is dangerous.

- Never operate a damaged appliance.
- Never pull on the power cord to unplug the appliance. Always unplug the appliance at the mains.
- If the appliance or the power cord is damaged, immediately unplug the power cord or switch off the fuse in the fuse box.
- Call customer services. → *Page 23*

⚠ WARNING – Danger: Magnetism!

Permanent magnets are used in the control panel or in the controls. These may affect

electronic implants, e.g. heart pacemakers or insulin pumps.
- Wearers of electronic implants must stay at least 10 cm away from the control panel.

⚠ WARNING – Risk of suffocation!
Children may put packaging material over their heads or wrap themselves up in it and suffocate.
- Keep packaging material away from children.
- Do not let children play with packaging material.

Children may breathe in or swallow small parts, causing them to suffocate.
- Keep small parts away from children.
- Do not let children play with small parts.

1.5 Halogen bulb

⚠ WARNING – Risk of burns!
The bulbs in the cooking compartment get very hot. There is still a risk of burning for some time after they have been switched off.
- Do not touch the glass cover.
- Avoid contact with your skin when cleaning.

⚠ WARNING – Risk of electric shock!
When changing the bulb, the bulb socket contacts are live.
- Before replacing the bulb, ensure that the appliance is switched off in order to prevent a potential electric shock.
- Also unplug the appliance from the mains or switch off the circuit breaker in the fuse box.

2 Preventing material damage

2.1 General

ATTENTION!
Objects on the cooking compartment floor at over 50 °C will cause heat to build up. The baking and roasting times will no longer be correct and the enamel will be damaged.
- Do not place any accessories, greaseproof paper or foil of any kind on the cooking compartment floor.
- Only place cookware on the cooking compartment floor if a temperature above 50 °C has been set.

When the cooking compartment is hot, any water inside it will create steam. The change in temperature may cause damage.
- Never pour water into the cooking compartment when it is still hot.
- Never place cookware containing water on the cooking compartment floor.

The prolonged presence of moisture in the cooking compartment leads to corrosion.
- Allow the cooking compartment to dry after use.
- Do not keep moist food in the cooking compartment for a long time with the door closed.
- Do not store food in the cooking compartment.

Leaving the appliance to cool down with the door open will damage the front of neighbouring kitchen units over time.
- Always allow the cooking compartment to cool down with the door closed after cooking at high temperatures.
- Take care not to trap anything in the appliance door.
- Only leave the cooking compartment to dry with the door open if a lot of moisture was produced during operation.

Fruit juice dripping from the baking tray leaves stains that cannot be removed.
- When baking very juicy fruit flans, do not pack too much on the baking tray.
- If possible, use the deeper universal pan.

Using oven cleaner in a hot cooking compartment damages the enamel.
- Never use oven cleaner in the cooking compartment when it is still warm.
- Remove all food remnants from the cooking compartment and the appliance door before you next heat up the appliance.

If the seal is very dirty, the appliance door will no longer close properly during operation. This may damage the front of adjacent kitchen units.
- Keep the seal clean at all times.
- Never operate the appliance if the seal is damaged or missing.

Sitting or placing objects on the appliance door may damage it.
- Do not place or hang objects on the appliance door.
- Do not place cookware or accessories on the appliance door.

With certain models, accessories may scratch the door pane when closing the appliance door.
- Always push accessories fully into the cooking compartment.

3 Environmental protection and saving energy

3.1 Disposing of packaging

The packaging materials are environmentally compatible and can be recycled.

- Sort the individual components by type and dispose of them separately.

3.2 Saving energy

If you follow these instructions, your appliance will use less power.

Only preheat the appliance if the recipe or the recommended settings tell you to do so.

- Not preheating the appliance can reduce the energy used by up to 20%.

Use dark-coloured, black-coated or enamelled baking tins.

- These types of baking tin absorb the heat particularly well.

Open the appliance door as little as possible during operation.

- This will maintain the temperature in the cooking compartment and eliminate the need for the appliance to reheat.

When baking multiple dishes, do so in succession or in parallel.

- The cooking compartment is heated after baking the first dish. This reduces the baking time for the second cake.

If the cooking time is relatively long, you can switch the appliance off 10 minutes before the cooking time ends.

- There will be enough residual heat to finish cooking the dish.

Remove any accessories that are not being used from the cooking compartment.

- Accessories that are not being used do not need to be heated.

Allow frozen food to defrost before cooking.

- This will save the energy that would otherwise be required to defrost it.

4 Familiarising yourself with your appliance

4.1 Control panel

You can use the control panel to configure all functions of your appliance and to obtain information about the operating status.

Note: On certain models, specific details such as colour and shape may differ from those pictured.

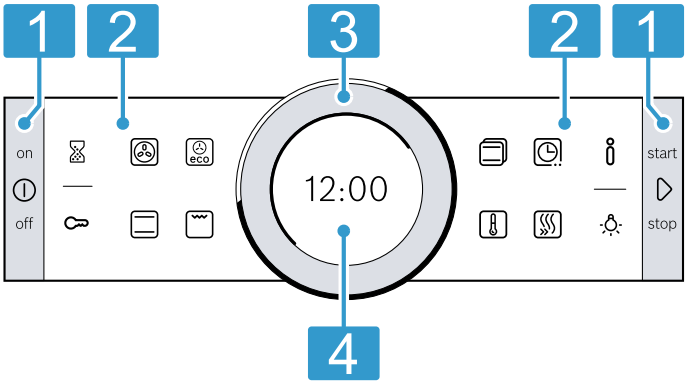

1	**Buttons** The buttons on the left- and right-hand side of the control panel have a pressure point. Pressing a button will execute its function. On appliances without a stainless steel front, the buttons are also touch-sensitive.
2	**Touch fields** Touch fields are touch-sensitive surfaces. To select a function, simply press lightly on the relevant field.
3	**Control ring** The control ring can be turned infinitely in either direction. Press down lightly on the control ring and move it in the direction you require.
4	**Display** The display shows the current settings, options or relevant information.

4.2 Buttons

Use the buttons on the left- and right-hand side of the control panel to switch your device or the operating mode on and off.

Button	Function	Use
	On/Off	Switch the appliance on or off.
	Start/Stop	Short press: Start or pause operation. Press and hold for approx. three seconds: Cancel operation.

4.3 Touch fields

Use the touch fields to select different functions directly.
The touch fields on the outside of the control panel are designed for general functions; the touch fields on the inside of the control panel are for the cooking mode.

The touch field for the function that is currently selected lights up red.

Touch field on the outside	Function	Use
	Timer	Select the timer.
	Childproof lock	Press and hold for approx. four seconds: Activate or deactivate the childproof lock.
	Information	Display additional information about a function or setting. To call up the basic settings, press and hold this for approx. three seconds when the appliance is switched off.
	Interior lighting	Switch the lighting in the cooking compartment on or off.

Touch field on the inside	Function	Use
	4D hot air	Directly select the "4D hot air" type of heating.
	Top/bottom heating	Select the "Top/bottom heating" type of heating directly.
	Hot air eco	Select the "Hot air eco" type of heating directly.
	Grill, large area	Select the "Grill, large area" type of heating directly.
	Types of heating	Select the list of types of heating.
	Temperature	Select the temperature in the cooking compartment.
	Time-setting options	Select the time-setting options.
	Rapid heating	Starts or cancels rapid heating for the cooking compartment.

4.4 Control ring

You can use the control ring to change the setting values that are shown in the display.
If you have reached the maximum value for setting values, such as the temperature, minimum or maximum value, this value remains in the display. If required, use the control ring to turn the value back again.
For lists, e.g. the types of heating, the first value starts again after the last value.

4.5 Display

The display shows the current setting values on different levels.

Value in the foreground	The value in the foreground is highlighted in white. You can use the control ring to change the value directly. Once operation has started, the temperature or level is displayed in the foreground.
Value in the background	Values in the background are displayed in grey. To change the value using the control ring, select the required function in advance.
Enlargement	As long as you use the control ring to change a value, only this value will be displayed as enlarged.

Display ring

The display ring is located around the outside of the display.

- Position indicator
  If you change a value, the display ring shows you where you are in the selection list. The display ring may be continuous or divided into segments depending on the settings area and the length of the selection list.
- Progress indicator
  During operation, the display ring displays the progress and turns red at second-long intervals.
  As the cooking time counts down, one segment of the display ring disappears every second.

Temperature display

The heating line and the residual heat indicator show you the temperature in the cooking compartment.
Due to thermal inertia, the temperature that is displayed may differ slightly from the actual temperature inside the cooking compartment.

- Heating line
  Once operation has started, the white line below the temperature turns red as the cooking compartment heats up. When you are preheating the appliance, the optimal time to place your food in the cooking compartment is as soon as the entire line has turned red.
  With set levels such as grill settings, the heating line turns red immediately.
- Residual heat indicator
  When the appliance is switched off, the display ring shows the residual heat in the cooking compartment. As the residual heat dissipates, the display ring gets darker before eventually disappearing completely.

4.6 Cooking compartment

The functions in the cooking compartment make your appliance easier to use.

Shelf supports

The rails in the cooking compartment enable you to place accessories at different heights.
→ *"Accessories", Page 8*
Your appliance has five shelf positions. The shelf positions are numbered from bottom to top.

You can remove the rails, e.g. for cleaning.
→ *"Rails", Page 17*

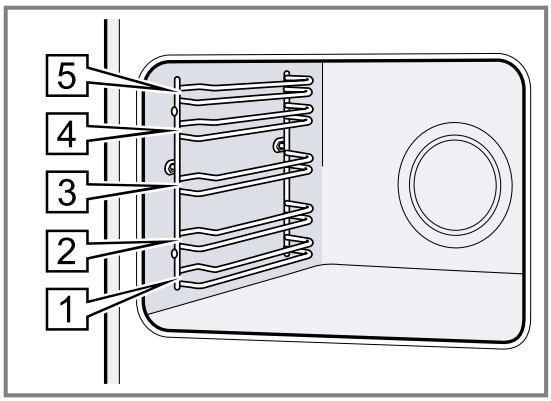

Self-cleaning surfaces

The back panel in the cooking compartment is self-cleaning. The self-cleaning surfaces are coated with a porous, matte ceramic layer and have a coarse surface. When the appliance is in operation, the self-cleaning surfaces absorb splashes from roasting or grilling and break them down.
If the self-cleaning surfaces no longer clean themselves adequately during operation, heat up the cooking compartment specifically to the right temperature.
→ *"Cleaning self-cleaning surfaces in the cooking compartment", Page 16*

Lighting

One or more oven lights illuminate the cooking compartment.
When you open the appliance door, the light in the cooking compartment switches on. If the appliance door remains open for longer than 15 minutes, the light switches off again.
For most operating modes, the lighting is switched on during operation. The lighting switches off again when the operation ends.

Cooling fan

The cooling fan switches on and off depending on the appliance's temperature. The hot air escapes above the door.

ATTENTION!

Do not cover the ventilation slot above the appliance door. The appliance overheats.

- ▶ Ensure that the ventilation slots are unobstructed.

To ensure that the appliance cools down more quickly after operation, the cooling fan continues to run for a certain period afterwards.

Appliance door

If you open the appliance door during operation, the operation stops. When you close the appliance door, the operation continues automatically.

5 Types of heating

To ensure that you always use the right type of heating to cook your food, we explain the differences and applications below.
The symbols for each type of heating help you to remember them.

When you select a type of heating, the appliance suggests a suitable temperature or setting. You can use these values or change them within the specified range.
For temperature settings above 275 °C and grill setting 3, the appliance reduces the temperature to approx. 275 °C or grill setting 1 after approx. 40 minutes.

Symbol	Type of heating	Temperature	What it's used for and how it works Possible additional options
	4D hot air	30–275 °C	Bake and roast on one or more levels. The fan distributes the heat from the ring-shaped heating element in the back wall evenly around the cooking compartment.
	Top/bottom heating	30–300 °C	Traditionally bake or roast on one level. This type of heating is ideal for cakes with moist toppings. The heat is emitted evenly from above and below.
	Hot air eco	30–275 °C	Cook selected dishes gently on one level without preheating. The fan distributes the heat from the ring-shaped heating element in the back wall evenly around the cooking compartment. The food is cooked in phases using residual heat. This type of heating is most effective between 125 and 275 °C. Always keep the appliance door closed when cooking. This type of heating is used to determine the energy consumption in air recirculation mode and the energy efficiency class.
	Top/bottom heating eco	30–300 °C	Gently cook selected dishes. Heat is emitted from above and below. This heating function is most effective between 150 and 250 °C. This type of heating is used to measure the energy consumption in the conventional mode.
	Circulated air grilling	30–300 °C	Roast poultry, whole fish or larger pieces of meat. The grill element and the fan switch on and off alternately. The fan circulates the hot air around the food.
	Grill, large area	Grill settings: 1 = low 2 = medium 3 = high	Grill flat items such as steak and sausages, or make toast. Gratinate food. The entire area below the grill element becomes hot.
	Grill, small area	Grill settings: 1 = low 2 = medium 3 = high	Grill small quantities, such as steak, sausages or toast. Gratinate small quantities of food. The central area below the grill element becomes hot.
	Pizza setting	30–275 °C	Cook pizza or dishes that require a lot of heat from below. The bottom heating element and the ring-shaped heating element in the back wall heat the cooking compartment.
	Bottom heating	30–250 °C	Final baking or cooking food in a bain marie. Heat is emitted from below.
	Defrosting	30–60 °C	Gently defrost frozen food.

6 Accessories

Use original accessories. These have been made especially for your appliance.

Note: Accessories may become deformed if they get hot. Deformation has no effect on function. As the accessory cools down, it will regain its original shape.

The accessories supplied may differ depending on the appliance model.

Accessories		Use
Wire rack	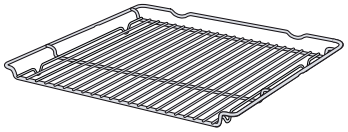	▪ Cake tins ▪ Ovenproof dishes ▪ Cookware ▪ Meat, e.g. roasting joints or steak ▪ Frozen meals
Universal pan	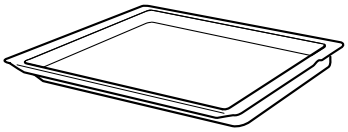	▪ Moist cakes ▪ Baked items ▪ Bread ▪ Large roasts ▪ Frozen meals ▪ Catch dripping liquids, e.g. fat when grilling food on the wire rack.

6.1 Locking function

The locking function prevents the accessories from tilting when they are pulled out.
You can pull out the accessories approximately halfway without them tipping. The accessories must be inserted into the cooking compartment correctly for the tilt protection to work properly.

6.2 Sliding accessories into the cooking compartment

Always slide the accessory into the cooking compartment the right way round. This is the only way to ensure that accessories can be pulled out approximately halfway without tipping.

1. Turn the accessories so that the notch a is at the rear and is facing downwards.
2. Insert the accessory between the two guide rods for a shelf position.

Wire rack	Insert the wire rack with the open side facing the appliance door and the curved lip ⌣ facing downwards. 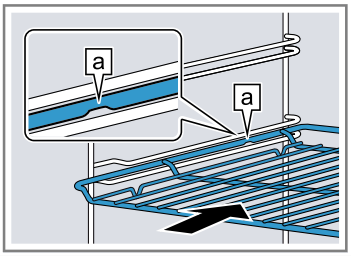
Baking tray E.g. universal pan or baking tray	Slide the tray in with the sloping edge b towards the appliance door. 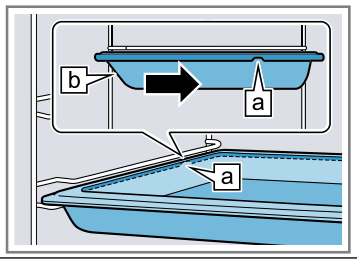

3. Push the accessory all the way in, making sure that it does not touch the appliance door.

Note: Take any accessories that you will not be using out of the cooking compartment while the appliance is in operation.

Combining accessories

You can combine the wire rack with the universal pan to catch any liquid that drips down.

1. Place the wire rack on the universal pan so that both spacers a are on the rear edge of the universal pan.
2. Insert the universal pan between the two guide rods for a shelf position. In so doing, the wire rack is on top of the upper guide rod.

Wire rack on universal pan	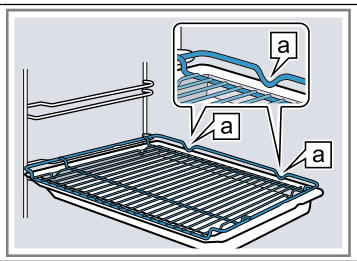

6.3 Other accessories

You can purchase other accessories from our after-sales service, specialist retailers or online.
You will find a comprehensive range of products for your appliance in our brochures and online:
www.bosch-home.com
Accessories vary from one appliance to another. When purchasing accessories, always quote the exact product number (E no.) of your appliance.
You can find out which accessories are available for your appliance in our online shop or from our after-sales service.

7 Before using for the first time

Configure the settings for initial start-up. Clean the appliance and accessories.

7.1 Initial configuration

When the appliance is connected to the electricity supply for the first time or following a lengthy power cut, you need to configure the settings before you can use it. It may take a few seconds for the settings to appear in the display.

1. Turn the control ring to change the setting as required.
   Possible settings:
   – Language
   – Clock
2. Press ⏲ to confirm.
✔ The next setting appears.
3. Work through the settings and make changes as required.
✔ After the last setting, a note appears in the display confirming that the initial configuration is complete.
✔ The time that is set appears on the display.
4. To check the appliance before heating for the first time, open and close the appliance door once.

7.2 Cleaning the appliance before using it for the first time

Clean the cooking compartment and accessories before using the appliance to prepare food for the first time.

1. Remove the product information and the accessories from the cooking compartment. Remove any leftover packaging, such as polystyrene pellets, and the adhesive tape that is in or on the appliance.
2. Wipe the smooth surfaces in the cooking compartment with a soft, damp cloth.
3. Press ⏻ to switch the appliance on.
4. Apply the following settings:

Type of heating	4D hot air
Temperature	Maximum
Cooking time	1 hour

→ *"Basic operation", Page 10*

5. Press ▷ to start.
   – Keep the kitchen ventilated while the appliance is heating.
✔ Once the time has elapsed, an audible signal sounds and the display shows the time as zero.
6. Press ⏻ to switch the appliance off.
7. Once the appliance has cooled down, clean the smooth surfaces in the cooking compartment with soapy water and a dish cloth.
8. Clean the accessories thoroughly using soapy water and a dish cloth or soft brush.

8 Basic operation

8.1 Switching on the appliance

▶ Press ⏻ to switch the appliance on.
✔ The Bosch logo appears in the display. The types of heating then appear.

8.2 Switching off the appliance

Switch your appliance off when you are not using it. The appliance will switch itself off automatically if it is not used for a certain period of time.

▶ Press ⏻ to switch the appliance off.
✔ The appliance switches off. Any functions currently in progress are cancelled.
✔ The time or residual heat indicator appears in the display.

8.3 Starting operation

You must start each operation.

▶ Press ▷ to start.
✔ The settings, the running time, the display ring and the heating line appear in the display.

8.4 Pausing or cancelling operation

You can briefly pause operation and then continue. If you cancel operation completely, the settings will be reset.

1. To pause operation briefly:
   – Briefly press ▷.
   – To continue operation, press ▷.
2. To cancel operation completely, press and hold ▷ for approx. 3 seconds.
✔ Operation will stop and all the settings will be reset.

8.5 Setting the type of heating and temperature

Requirement: The operating mode "Types of heating" has been selected.

1. Use the control ring to set the required type of heating.
2. Press 🌡.
✔ The temperature is highlighted in white.
3. Use the control ring to set the temperature.
4. Press ▷ to start.
✔ The appliance starts heating.
✔ The target temperature, the time and how long the appliance has already been in operation are shown in the display.

5. When the food is ready, press ⏻ to switch the appliance off.

Tip: The most suitable type of heating for your food can be found in the description of the type of heating.
→ *"Types of heating", Page 8*

Note: You can also set a cooking time and end time on the appliance.
→ *"Time-setting options", Page 11*

Changing the type of heating

When you change the type of heating, the other settings will also be reset.

1. Press ▷ to pause operation.
2. Press ⧉.
✔ The first type of heating appears in the display with the corresponding default temperature.
3. Use the control ring to change the type of heating.

Changing the temperature

Once operation has started, you can change the temperature directly.

▶ Use the control ring to change the temperature.
✔ The temperature is applied immediately.

Directly selecting types of heating

You can select certain types of heating directly using a touch field.

1. Press the touch field for the required type of heating.
   Available types of heating with direct selection:
   – 4D hot air
   – Top/bottom heating
   – Hot air eco
   – Grill, large surface
✔ The temperature is highlighted in white.
2. Use the control ring to set the temperature.
3. Press ▷ to start.
✔ The appliance starts heating.
✔ The target temperature, the time and how long the appliance has already been in operation are shown in the display.

8.6 Displaying information

In most cases, you can call up information about the function that you have just started. The appliance displays some information, e.g. to ask you to do/confirm something or to issue a warning, automatically.

1. Press ℹ.
✔ If available, information is displayed for a few seconds.
2. Use the control ring to scroll through longer passages of text.

9 Rapid heating

To save time, you can shorten the preheating time for set temperatures of 100 °C and higher.
You can use rapid heating for the following types of heating:

- 4D hot air
- Top/bottom heating

9.1 Setting rapid heating

To ensure an even cooking result, do not place the food in the cooking compartment until rapid heating has come to an end.

Note: Do not set a cooking time until rapid heating has come to an end.

1. Set a suitable type of heating and a temperature of at least 100 °C.
2. Press ♨.
✔ The symbol lights up red.
3. Press ▷ to start.
✔ Rapid heating starts.
✔ When rapid heating has come to an end, an audible signal sounds. The red symbol goes out.
4. Place the food in the cooking compartment.

Cancelling rapid heating

▶ Press ♨.
✔ The red symbol goes out.

10 Time-setting options

Your appliance has different time-setting options, with which you can control its operation.

10.1 Overview of the time-setting options

You can set a cooking time and end time for the operation. The timer can be set independently of the appliance when it is in operation.

Time-setting option	Use
Timer ⌛	The timer can be set independently of the appliance when it is in operation. It does not affect the appliance.
Cooking time ⏲	If you set a cooking time for the operation, operation of the appliance stops automatically once this time has elapsed.
End ⏲	For the cooking time, you can set the time at which operation ends. The appliance starts up automatically so that it finishes cooking at the required time.

10.2 Setting the timer

The timer runs independently of the appliance when it is in operation. The timer can be set when the appliance is switched on or off, up to 23 hours and 59 minutes. The timer has its own audible signal so that you can tell whether it is the timer or a cooking time which has elapsed.

1. Press ⌛.
✔ The symbol lights up red.
2. Use the control ring to set the timer duration.
3. Press ⌛ to start the timer.
   The timer starts automatically after a few seconds.
✔ The timer counts down.
✔ When the appliance is switched off, you will still be able to see the timer counting down in the display.
✔ When the appliance is switched on, the display shows the settings for the current operation. To display the timer for a few seconds, press ⌛.
✔ An audible signal sounds once the timer duration has elapsed. The red symbol goes out.
4. Once the timer duration has elapsed:
   – To stop the signal early, press any touch field.
   – To set another timer, press ⌛ and use the control ring to set the time.

Changing the timer

You can change the timer duration at any time.

1. Press ⌛.
2. Use the control ring to change the duration of the timer.
3. Press ⌛ to confirm.

Cancelling the timer

You can cancel the timer duration at any time.

1. Press ⌛.
2. Use the control ring to reset the duration of the timer to zero.
3. Press ⌛ to confirm.
✔ The red symbol goes out.

10.3 Setting the cooking time

You can set a cooking time for operation of up to 23 hours 59 minutes.

Requirement: The type of heating and temperature or setting have been set.

1. Press ⏲.
✔ The symbol lights up red.
2. Use the control ring to set the cooking time.

Direction of rotation	Default value
Left	10 minutes
Right	30 minutes

   The cooking time can be set in one-minute increments up to one hour, and then in five-minute increments. The end time is calculated automatically.
3. Press ▷ to start.
✔ The appliance starts to heat and the cooking time counts down.
✔ When the time has elapsed, a signal sounds. The time shown in the display is zero.
4. When the cooking time has elapsed:
   – To stop the signal early, press any touch field.
   – To set another cooking time, press ⏲ and use the control ring to set the time.
   – To continue without setting a cooking time, press ▷ to start.
   – When the food is ready, press ⏻ to switch the appliance off.

Changing the cooking time

You can change the cooking time at any time.

1. Press ⏲.
2. Use the control ring to change the cooking time.
3. Press ⏲ to confirm.

Cancelling the cooking time

You can cancel the cooking time at any time.

1. Press ⏲.
2. Use the control ring to reset the cooking time to zero.
3. Press ⏲ to confirm.
   – To continue without setting a cooking time, press ▷ to start.

10.4 Setting the end time

You can delay the time at which cooking is due to finish by up to 23 hours and 59 minutes.

Notes

- In order to achieve a good cooking result, do not delay the end time once the appliance is already in operation.
- Food will spoil if you leave it in the cooking compartment for too long.

Requirements

- The type of heating and temperature or setting have been set.
- A cooking time is set.

1. Press ⏲ again.
2. Use the control ring to delay the end time.
3. Press ▷ to start.
✔ The display shows the start time. The appliance is in standby mode.
✔ Once the start time has been reached, the appliance starts to heat up and the cooking time starts counting down.
✔ When the time has elapsed, a signal sounds. The time shown in the display is zero.
4. When the cooking time has elapsed:
   – To stop the signal early, press any touch field.
   – To set another cooking time, press ⏲ and use the control ring to set the time.
   – To continue without setting a cooking time, press ▷ to start.
   – When the food is ready, press ⏻ to switch the appliance off.

Changing the end time

In order to achieve a good cooking result, only change the set end time before operation starts and the cooking time is counting down.

1. Press ▷ to pause operation.
2. Press ⏲ twice.
3. Use the control ring to change the end time.
4. Press ▷ to continue operation.

Cancelling the end time

You can delete the set end at any time.

1. Press ▷ to pause operation.
2. Press ⏲ twice.
3. Use the control ring to reset the end time to zero.
4. Press ▷ to continue operation.
✔ The appliance starts to heat and the cooking time counts down.

11 Childproof lock

You can secure your appliance to prevent children from accidentally switching it on or changing the settings.

11.1 Activating and deactivating the childproof lock

You can activate and deactivate the childproof lock regardless of whether the appliance is switched on or off.

1. Press and hold ⚷ for approx. 4 seconds to activate the childproof lock.
✔ A confirmation note appears on the display.
✔ The control panel is locked. The appliance can only be switched off using ⏻.
✔ When the appliance is on, ⚷ lights up. When the appliance is off, ⚷ does not light up.
2. Press and hold ⚷ for approx. 4 seconds to deactivate the childproof lock.
✔ A confirmation note appears on the display.

12 Sabbath mode

You can set a cooking time of up to 74 hours using Sabbath mode. You can use top/bottom heating to keep food warm between 85 °C and 140 °C during this time without having to switch the appliance on or off.

12.1 Starting Sabbath mode

Notes

- If you open the appliance door during operation, the appliance stops heating. When you close the appliance door, the appliance continues to heat again.
- Once it has started, you can no longer change or interrupt Sabbath mode.

Requirement: Sabbath mode is activated in the basic settings.

→ *"Basic settings", Page 13*

1. Use the control ring to set the Sabbath mode type of heating.
2. Press 🌡.
✔ The temperature is highlighted in white.
3. Use the control ring to set the temperature.
4. Press ⏲.
✔ The symbol lights up red.
5. Use the control ring to set the cooking time. The end time cannot be delayed.
6. Press ▷ to start the operation.
✔ The appliance starts to heat and the time starts to count down.
7. Once the cooking time has elapsed, an audible signal sounds. The cooking time is at zero. The appliance stops heating up and responds again as usual outside of Sabbath mode.
   – Press ⏻ to switch the appliance off.
   The appliance automatically switches off after approx. 10 to 20 minutes.

13 Basic settings

You can configure the appliance to meet your needs.

13.1 Overview of the basic settings

Here you can find an overview of the basic settings and factory settings. The basic settings depend on the features of your appliance.

Basic setting	Selection
Language	See selection on the appliance.
Clock	Clock in 24-hour format.
Audible signal	Short duration (30 seconds) Medium duration (1 minute)[1] Long duration (5 minutes)
Button tone	Switched on Switched off (tone remains for ⏻)[1]
Display brightness	5 settings
Clock display	Off Digital[1]
Lighting	Off during operation On during operation[1]
Night-time dimming	Switched off[1] Switched on
Brand logo	Display[1] Do not display

[1] Factory setting (may vary according to model)

Basic setting	Selection
Fan run-on time	Recommended[1] Minimum
Pull-out system	Not retrofitted (if shelf supports and a single set of pull-out rails are fitted)[1] Retrofitted (if two or three sets of pull-out rails are fitted)
Sabbath mode	Switched on Switched off[1]
Factory setting	Reset Do not reset[1]

[1] Factory setting (may vary according to model)

13.2 Changing the basic settings

Requirement: The appliance is switched off.

1. Press and hold ⓘ for approx. three seconds.
2. Press ⏲ to confirm the messages in the display.
✔ The first basic setting is shown in the display.
3. Use the control ring to change the basic setting.
4. Press ⏲.
✔ The next basic setting appears in the display.
5. Use ⏲ to scroll through the basic settings and, if required, use the control ring to change any of these settings.
6. To save the changes, press and hold ⓘ for approx. three seconds.

Note: Your changes to the basic settings will be retained even after a power failure.

Discarding changes to the basic settings

▸ Press ⏻.
✔ All changes will be discarded and not saved.

13.3 Setting the time

Requirement: The appliance is switched off.

1. Press and hold ⓘ for approx. three seconds.
2. Press ⏲ to confirm the messages in the display.
✔ The first basic setting is shown in the display.
3. Press ⏲.
✔ The "Time" basic setting is shown in the display.
4. Use the control ring to change the time.
5. To save the change, press and hold ⓘ for approx. three seconds.

14 Cleaning and servicing

To keep your appliance working efficiently for a long time, it is important to clean and maintain it carefully.

14.1 Cleaning products

In order to avoid damaging the various oven surfaces on the appliance, do not use unsuitable cleaning products.

⚠ **WARNING – Risk of electric shock!**
An ingress of moisture can cause an electric shock.
▸ Do not use steam- or high-pressure cleaners to clean the appliance.

ATTENTION!
Unsuitable cleaning products may damage the surfaces of the appliance.
▸ Do not use harsh or abrasive cleaning products.
▸ Do not use cleaning products with a high alcohol content.
▸ Do not use hard scouring pads or cleaning sponges.
▸ Do not use any special cleaners for cleaning the appliance while it is hot.

Using oven cleaner in a hot cooking compartment damages the enamel.
▸ Never use oven cleaner in the cooking compartment when it is still warm.
▸ Remove all food remnants from the cooking compartment and the appliance door before you next heat up the appliance.

New sponge cloths contain residues from production.
▸ Wash new sponge cloths thoroughly before use.

Suitable cleaning agents

Only use cleaning agents that are suitable for the different surfaces on your appliance.

Follow the instructions on cleaning the appliance.
→ *"Cleaning the appliance", Page 15*

Appliance front

Surface	Suitable cleaning agents	Information
Stainless steel	▪ Hot soapy water ▪ Special stainless steel cleaning products suitable for hot surfaces	To prevent corrosion, remove any limescale, grease, starch or albumin (e.g. egg white) stains on stainless steel fronts immediately. Apply a thin layer of the stainless steel cleaning product with a soft cloth.
Plastic or painted surfaces E.g. control panel	▪ Hot soapy water	Do not use glass cleaner or a glass scraper. To avoid permanent stains, remove any descaling agent that gets onto the surface immediately.

Appliance door

Area	Suitable cleaning agents	Information
Door panels	■ Hot soapy water	Do not use a glass scraper or a stainless steel wool. **Tip:** Remove the door panels in order to clean them thoroughly. → *"Appliance door", Page 17*
Door cover	■ Made of stainless steel: Stainless steel cleaner ■ Made of plastic: Hot soapy water	Do not use glass cleaner or a glass scraper. Do not use stainless steel care products. **Tip:** Remove the door cover for thorough cleaning. → *"Appliance door", Page 17*
Stainless steel interior door frame	Stainless steel cleaner	Discolouration can be removed using stainless steel cleaner. Do not use stainless steel care products.
Door handle	■ Hot soapy water	To avoid permanent stains, remove any descaling agent that gets onto the surface immediately.
Door seal	■ Hot soapy water	Do not remove or scrub.

Cooking compartment

Area	Suitable cleaning agents	Information
Enamel surfaces	■ Hot soapy water ■ Vinegar water ■ Oven cleaner	Soak any heavily soiled areas and use a brush or steel wool. Leave the appliance door open to dry the cooking compartment after cleaning it. **Notes** ■ Enamel burns at very high temperatures, causing minor discolouration. The functionality of your appliance is not affected by this. ■ The edges of thin trays cannot be completely enamelled and may be rough. This does not impair corrosion protection. ■ Food residues will leave a white coating on the enamel surfaces. The coating does not pose a health risk. The functionality of your appliance is not affected by this. You can remove residues with lemon juice.
Self-cleaning surfaces	-	Follow the instructions for self-cleaning surfaces. → *"Cleaning self-cleaning surfaces in the cooking compartment", Page 16*
Glass cover for the oven light	■ Hot soapy water	Use oven cleaner to remove very heavy soiling.
Rails	■ Hot soapy water	Soak any heavily soiled areas and use a brush or steel wool. **Note:** To clean thoroughly, detach the rails. → *"Rails", Page 17*
Accessories	■ Hot soapy water ■ Oven cleaner	Soak any heavily soiled areas and use a brush or steel wool. Enamelled accessories are dishwasher-safe.

14.2 Cleaning the appliance

In order to avoid damaging the appliance, you must clean your appliance only as specified, and with suitable cleaning products.

⚠ **WARNING – Risk of burns!**

The appliance and its parts that can be touched become hot during use.

- ▸ Caution should be exercised here in order to avoid touching heating elements.
- ▸ Young children under 8 years of age must be kept away from the appliance.

⚠ **WARNING – Risk of fire!**

Loose food remnants, fat and meat juices may catch fire.

- ▸ Before using the appliance, remove the worst of the food residues and remnants from the cooking compartment, heating elements and accessories.

Requirement: Read the information on cleaning products.

→ *"Cleaning products", Page 14*

1. Clean the appliance using hot soapy water and a dish cloth.
   - For some surfaces, you can use alternative cleaning agents.
     → *"Suitable cleaning agents", Page 14*
2. Dry with a soft cloth.

14.3 Cleaning self-cleaning surfaces in the cooking compartment

The back panel in the cooking compartment is self-cleaning. The self-cleaning surfaces are coated with a porous, matte ceramic layer and have a coarse surface. When the appliance is in operation, the self-cleaning surfaces absorb splashes from baking, roasting or grilling and break them down. If the self-cleaning surfaces no longer clean themselves adequately during operation, heat up the cooking compartment specifically to the right temperature.

ATTENTION!

If you do not clean the self-cleaning surfaces regularly, they may become damaged.

- ▸ If dark stains are visible on the self-cleaning surfaces, heat up the cooking compartment.
- ▸ Do not use oven cleaner or abrasive cleaning aids. If oven cleaner accidentally comes into contact with the self-cleaning surfaces, dab it off immediately using water and a sponge cloth. Do not rub.

1. Remove accessories and cookware from the cooking compartment.
2. Detach the shelf supports and remove them from the cooking compartment.
   → *"Rails", Page 17*
3. Remove coarse dirt using soapy water and a soft cloth:
   - From the smooth enamel surfaces
   - From the inside of the appliance door
   - From the glass cover on the oven light

   This prevents stains that cannot be removed.
4. Remove any objects from the cooking compartment. The cooking compartment must be empty.
5. Set the 4D hot air type of heating.
6. Set the maximum temperature.
7. Start the operation.
8. Switch off the appliance after one hour.
9. Once the appliance has cooled down, wipe the cooking compartment with a damp cloth.

   Note: Marks may appear on the self-cleaning surfaces. Residues of sugar and egg white in the food are not removed and stick to the surfaces. Red stains are residues from salty food – they are not rust. The stains are not hazardous to health. These marks do not impair the cleaning ability of the self-cleaning surfaces.
10. Attach the shelf supports.
    → *"Rails", Page 17*

15 Cleaning assistance

The cleaning assistance is a quick alternative for occasionally cleaning the cooking compartment. The cleaning assistance softens dirt by vaporising the soapy water. It is then easier to remove dirt.

15.1 Setting the cleaning assistance

⚠ **WARNING – Risk of scalding!**

If there is water in the cooking compartment when it is hot, this may create hot steam.

- ▸ Never pour water into the cooking compartment when the cooking compartment is hot.

Requirement: The cooking compartment has cooled down completely.

1. Remove the accessories from the cooking compartment.
2. Mix 0.4 litres water with a drop of washing-up liquid and pour into the centre of the cooking compartment floor.
   Do not use distilled water.
3. Press ⧉.
4. Use the control ring to set the bottom heating ⊡.
5. Press 🌡.
6. Use the control ring to set the temperature to 80 °C.
7. Press ⏲.
8. Use the control ring to set the cooking time to four minutes.
9. Press ▷ to start.
   - ✔ The appliance starts to heat and the cooking time counts down.
   - ✔ When the time has elapsed, a signal sounds. The time shown in the display is zero.
10. Use ⏻ to switch the appliance off and leave the cooking compartment to cool for approx. 20 minutes.

15.2 Wiping down the cooking compartment

ATTENTION!

The prolonged presence of moisture in the cooking compartment leads to corrosion.

- ▸ After using the cleaning assistance, wipe the cooking compartment and allow it to dry completely.

Requirement: The cooking compartment must have cooled down.

1. Open the appliance door and remove the remaining water with an absorbent sponge cloth.
2. Clean the smooth surfaces in the cooking compartment with a dish cloth or a soft brush. Remove stubborn food remnants using a stainless steel scouring pad.
3. Remove limescale with a cloth soaked in vinegar. Then wipe with clean water and rub dry with a soft cloth (including under the door seal).
4. In order to dry the cooking compartment, leave the appliance door open in the detent position (approx. 30°) for approx. one hour.

16 Rails

To thoroughly clean the rails and the cooking compartment, or to replace the rails, you can remove the rails.

16.1 Detaching the rails

⚠ **WARNING – Risk of burns!**
The shelf supports get very hot
- ▸ Never touch the shelf supports when hot.
- ▸ Always allow the appliance to cool down.
- ▸ Keep children at a safe distance.

1. Lift the rail forwards slightly ① and detach it ②.
2. Pull the whole rail to the front ③ and remove it.

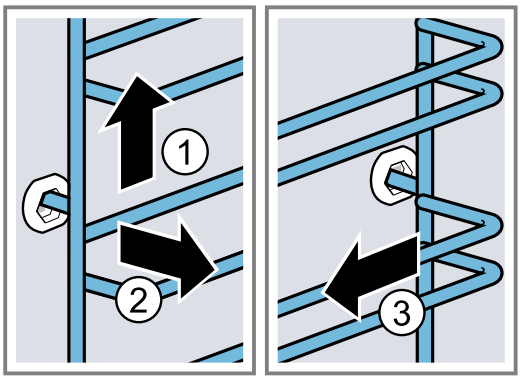

3. Clean the rail.
→ *"Cleaning products", Page 14*

16.2 Attaching the rails

Notes
- The rails only fit on the right or left.
- For both rails, ensure that the curved rods are at the front.

1. First, push the rail into the middle of the rear socket ① until the rail rests against the cooking compartment wall, and then push this back ②.
2. Push the rail into the front socket ③ until the rail also rests against the cooking compartment wall, and then press this downwards ④.

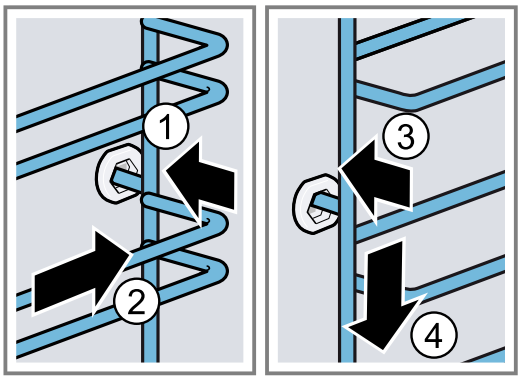

17 Appliance door

To clean the appliance door thoroughly, you can disassemble the appliance door.

17.1 Detaching the appliance door

⚠ **WARNING – Risk of injury!**
Components inside the appliance door may have sharp edges.
- ▸ Wear protective gloves.

The hinges on the appliance door move when the door is opened and closed, which could trap your fingers.
- ▸ Keep your hands away from the hinges.

1. Open the appliance door fully.

2. ⚠ **WARNING – Risk of injury!**
When the hinges are not secured, they can snap shut with great force.
- Make sure that the locking levers are always either fully closed or (when detaching the oven door) fully open.

Open the locking levers on the left- and right-hand hinges.

Locking levers opened	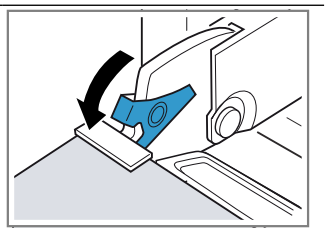 The hinge is now secured and cannot snap shut.
Locking levers closed	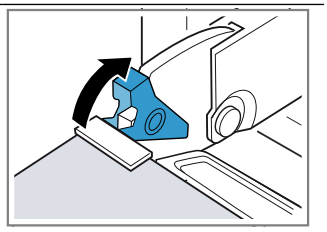 The appliance door is secured and cannot be detached.

✔ The locking levers are open. The hinges are now secured and cannot snap shut.

3. Close the appliance door fully ①. Grab hold of the appliance door with both hands (on the left and right) and pull it upwards and out ②.

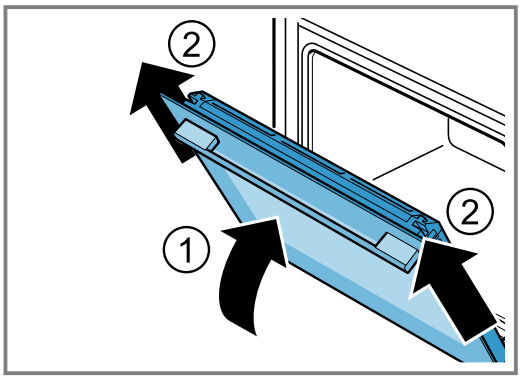

4. Carefully place the appliance door on a level surface.

17.2 Attaching the appliance door

⚠ **WARNING – Risk of injury!**
The hinges on the appliance door move when the door is opened and closed, which could trap your fingers.
- Keep your hands away from the hinges.

When the hinges are not secured, they can snap shut with great force.
- Make sure that the locking levers are always either fully closed or (when detaching the oven door) fully open.

1. Slide the appliance door straight onto the two hinges ①. Slide the appliance door on as far as it will go.
2. Open the appliance door fully.
3. Close the locking levers on the left- and right-hand hinges ②.

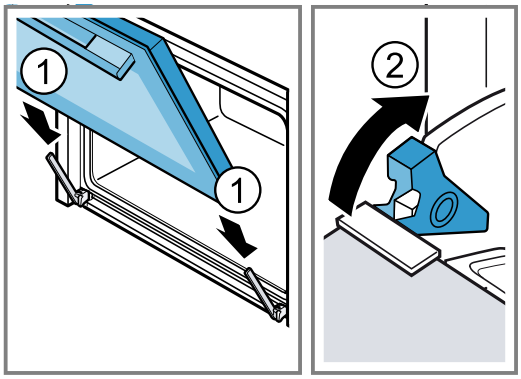

✔ The locking levers are closed. The appliance door is secured and cannot be detached.

4. Close the appliance door.

17.3 Removing the door panes

⚠ **WARNING – Risk of injury!**
The hinges on the appliance door move when the door is opened and closed, which could trap your fingers.
- Keep your hands away from the hinges.

Components inside the appliance door may have sharp edges.
- Wear protective gloves.

1. Open the appliance door fully.
2. Open the locking levers on the left- and right-hand hinges ①.

✔ The locking levers are open. The hinges are now secured and cannot snap shut.

3. Close the appliance door fully ②.

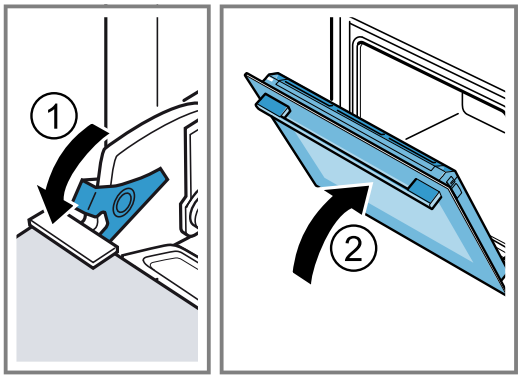

4. Push on the left- and right-hand side of the door cover from the outside ① until it is released.

5. Remove the door cover ②.

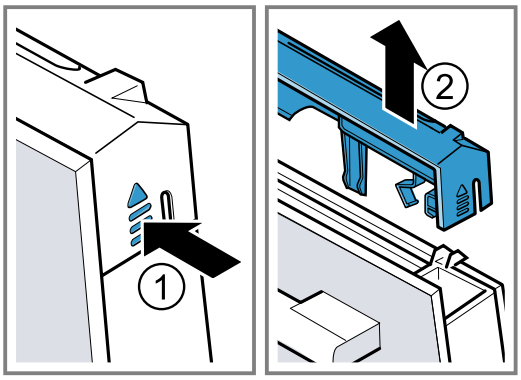

6. Lift out the inner pane ① and set it down carefully on a flat surface.
7. Lift out the intermediate pane ② and set it down carefully on a flat surface.

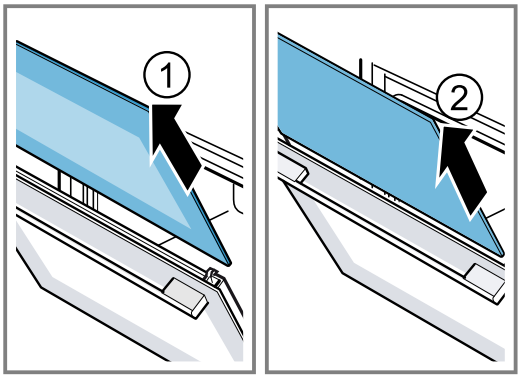

8. Open the appliance door and remove the door seal.

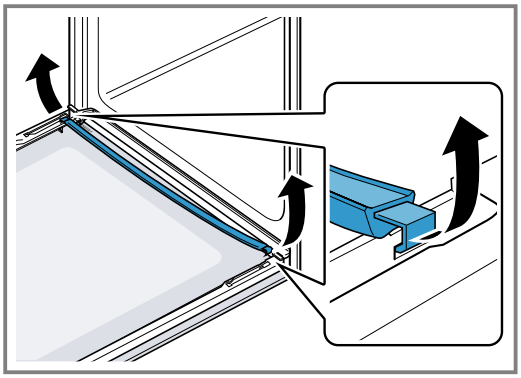

9. If necessary, you can remove the condensate trough for cleaning.
   - Open the appliance door.
   - Tilt the condensate trough upwards and remove it.

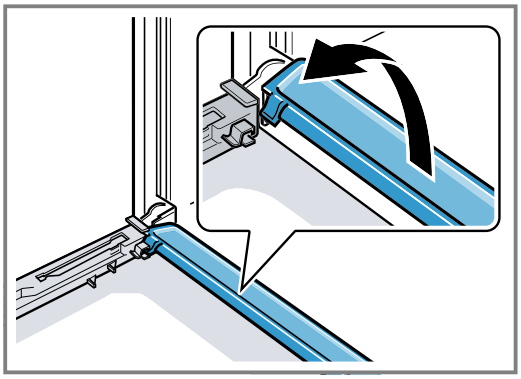

10. ⚠ **WARNING – Risk of injury!**
    Scratched glass in the appliance door may develop into a crack.
    ▸ Do not use any harsh or abrasive cleaners or sharp metal scrapers to clean the glass on the oven door, as they may scratch the surface.

    Clean the removed door panes on both sides with glass cleaner and a soft cloth.
11. Clean the condensate trough with a cloth and hot soapy water.
12. Clean the appliance door.
    → *"Suitable cleaning agents", Page 14*
13. Dry the door panes and refit them.

17.4 Fitting the door panes

⚠ **WARNING – Risk of injury!**
The hinges on the appliance door move when the door is opened and closed, which could trap your fingers.
▸ Keep your hands away from the hinges.
Components inside the appliance door may have sharp edges.
▸ Wear protective gloves.

1. Open the appliance door fully.
2. Place the condensate trough vertically into the retainer [a] and turn it downwards.

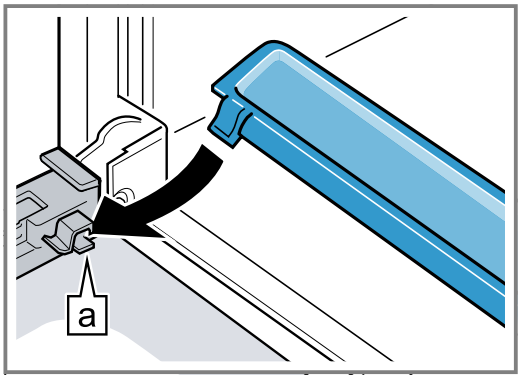

3. Slide the intermediate pane into the left- and right-hand retainers [a].

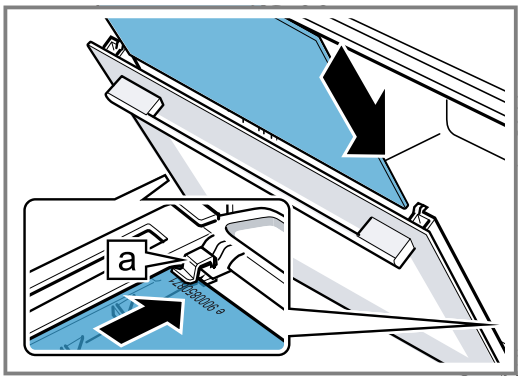

4. Push the intermediate pane upwards until it is in the left- and right-hand retainers [a].

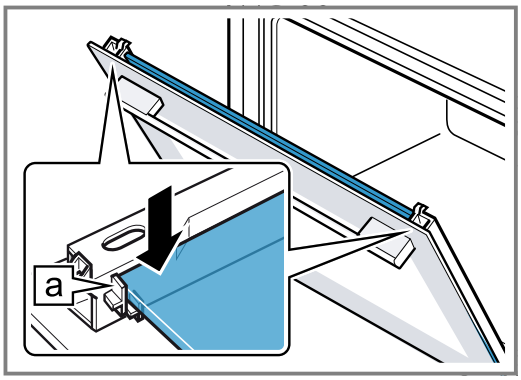

5. Open the appliance door and attach the door seal.

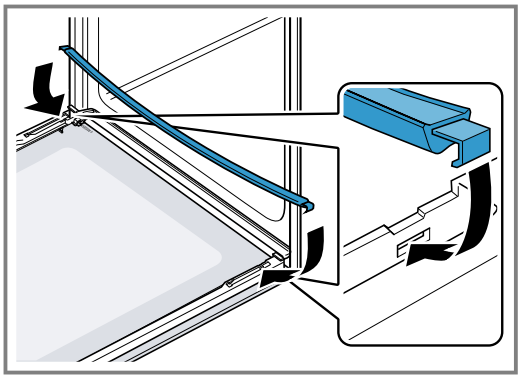

6. Slide the inner pane into the left- and right-hand retainers [a].

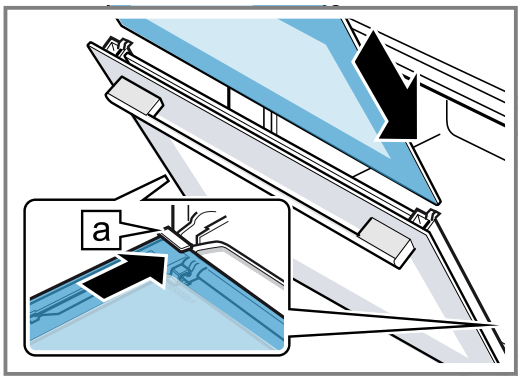

7. Push the inner pane upwards until it is in the left- and right-hand retainers [a].

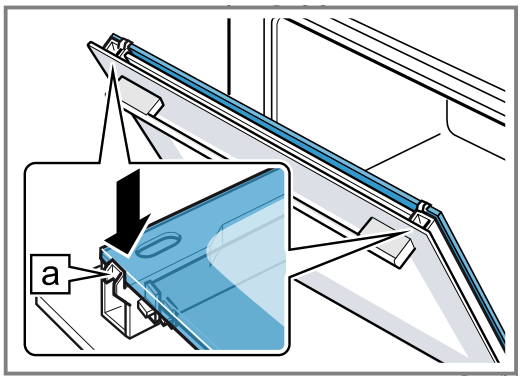

8. Put the door cover in position ① and push down on it until you hear it click into place.
9. Open the appliance door fully.
10. Close the locking levers on the left- and right-hand hinges ②.

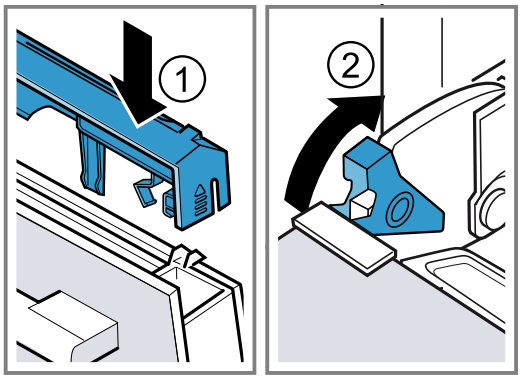

✔ The locking levers are closed. The appliance door is secured and cannot be detached.

11. Close the appliance door.

Note: Do not use the cooking compartment again until the door panes have been correctly fitted.

18 Troubleshooting

You can rectify minor faults on your appliance yourself. Read the troubleshooting information before contacting after-sales service. This will avoid unnecessary costs.

⚠ **WARNING – Risk of injury!**

Improper repairs are dangerous.

- Repairs to the appliance should only be carried out by trained specialist staff.
- If the appliance is defective, call Customer Service.

⚠ **WARNING – Risk of electric shock!**

Incorrect repairs are dangerous.

- Repairs to the appliance should only be carried out by trained specialist staff.
- Only use genuine spare parts when repairing the appliance.
- If the power cord of this appliance is damaged, it must be replaced by trained specialist staff.

18.1 Malfunctions

Fault	Cause and troubleshooting
The appliance is not working.	The circuit breaker is faulty. ▶ Check the circuit breaker in the fuse box.
	There has been a power cut. ▶ Check whether the lighting in your kitchen or other appliances are working.
"Sprache Deutsch" appears in the display.	There has been a power cut. ▶ Implement the settings for the initial configuration. – Language – Clock
The operation does not start or is interrupted.	Different causes are possible. ▶ Check any notifications that appear in the display. → *"Displaying information", Page 11*
	Malfunction ▶ Call the after-sales service. → *"Customer Service", Page 23*
Appliance does not heat up.	Demo mode is activated in the basic settings; ⧄ appears in the display. **1.** Briefly disconnect the appliance from the power supply by switching the circuit breaker in the fuse box off and back on again. **2.** Deactivate demo mode within three minutes in the → *"Basic settings", Page 13*.
	There has been a power cut. ▶ Open and close the appliance door once after a power failure. ✔ The appliance is checked and is ready to use.
The time is not displayed when the appliance is switched off.	Basic setting has been changed. ▶ Change the basic setting for the time display. → *"Basic settings", Page 13*
The control ring has fallen out of the mount in the control panel.	The control ring has been detached. **1.** Insert the control ring into the mount in the control panel. **2.** Push the control ring into the mount so that it clicks into place and can be turned.
The control ring is difficult to turn.	There is dirt below the control ring. The control ring can be removed. **Note:** To ensure that the mount remains stable, do not remove the control ring too often. **1.** To loosen the control ring, press on the outer edge of the control ring. ✔ The control ring tilts and is easier to grip. **2.** Remove the control ring from the mount. **3.** Clean the control ring and its mount on the appliance carefully using soapy water and a dish cloth. Dry with a soft cloth. Do not use any harsh or abrasive cleaning agents. Do not soak the control ring. Do not clean the control ring in the dishwasher.
The interior lighting does not work.	The halogen lamp is defective. ▶ Change the oven light bulb. → *"Replacing the oven light bulb", Page 22*
Maximum operating time reached.	To prevent an unwanted permanent operation, the appliance automatically stops heating after several hours if the settings are unchanged. A message appears in the display. The point at which the maximum operating time is reached is determined by the corresponding settings for an operating mode. **1.** To continue the operation, press any touch field and turn the control ring. **2.** If you do not need to use the appliance, use ⏻ to switch it off. **Tip:** To prevent the appliance from switching off when you do not want it to, set a cooking time. → *"Setting the cooking time", Page 12*

Fault	Cause and troubleshooting
A message with "D" or "E" appears in the display, e.g. D0111 or E0111.	The electronics have detected a fault. **1.** Switch the appliance off and on again. ✔ If the fault was a one-off, the message disappears. **2.** If the message appears again, call the after-sales service. Please specify the exact error message when calling. → *"Customer Service", Page 23*
The cooking result is not satisfactory.	Settings were unsuitable. Setting values, e.g. temperature or cooking time, depend on the recipe, quantity and food. ▸ Next time, set lower or higher values. **Tip:** A lot of information about the food preparation and corresponding setting values can be found on our website www.bosch-home.com.

18.2 Replacing the oven light bulb

If the light in the cooking compartment fails, change the oven light bulb.

Note: Heat-resistant, 40-watt, 230 V halogen bulbs are available from the after-sales service or specialist retailers. Only use these bulbs. Hold the new halogen bulbs only with a clean, dry towel. This increases the service life of the bulb.

⚠ **WARNING – Risk of burns!**

The appliance and its parts that can be touched become hot during use.

- ▸ Caution should be exercised here in order to avoid touching heating elements.
- ▸ Young children under 8 years of age must be kept away from the appliance.

⚠ **WARNING – Risk of electric shock!**

When changing the bulb, the bulb socket contacts are live.

- ▸ Before replacing the bulb, ensure that the appliance is switched off in order to prevent a potential electric shock.
- ▸ Also unplug the appliance from the mains or switch off the circuit breaker in the fuse box.

Requirements

- The appliance is disconnected from the power supply.
- The cooking compartment has cooled down.
- You have a new halogen bulb to replace the old one.

1. Place a tea towel in the cooking compartment to prevent damage.
2. Turn the glass cover anti-clockwise to remove it ①.
3. Pull out the halogen bulb without turning it ②.

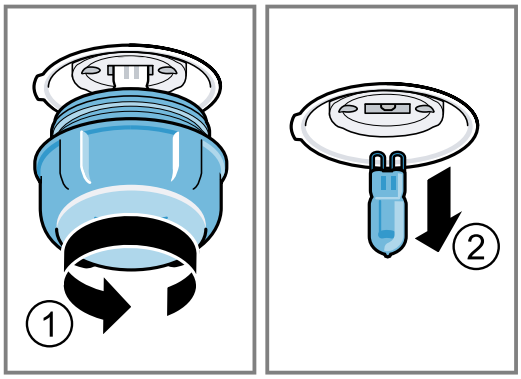

4. Insert the new halogen lamp and press it firmly into the socket.
   Make sure the pins are positioned correctly.
5. Depending on the appliance model, the glass cover may have a sealing ring. Put the sealing ring in position.
6. Screw the glass cover on.
7. Take the tea towel out of the cooking compartment.
8. Connect the appliance to the power supply.

19 Disposal

Find out here how to dispose of old appliances correctly.

19.1 Disposing of old appliance

Valuable raw materials can be reused by recycling.

1. Unplug the appliance from the mains.
2. Cut through the power cord.
3. Dispose of the appliance in an environmentally friendly manner.
   Information about current disposal methods are available from your specialist dealer or local authority.

This appliance is labelled in accordance with European Directive 2012/19/EU concerning used electrical and electronic appliances (waste electrical and electronic equipment - WEEE).
The guideline determines the framework for the return and recycling of used appliances as applicable throughout the EU.

20 Customer Service

If you have any queries on use, are unable to rectify faults on the appliance yourself or if your appliance needs to be repaired, contact Customer Service. Detailed information on the warranty period and terms of warranty in your country is available from our after-sales service, your retailer or on our website.
If you contact Customer Service, you will require the product number (E-Nr.) and the production number (FD) of your appliance.
The contact details for Customer Service can be found in the enclosed Customer Service directory or on our website.

20.1 Product number (E-Nr.) and production number (FD)

You can find the product number (E-Nr.) and the production number (FD) on the appliance's rating plate. You will see the rating plate with these numbers if you open the appliance door.

Make a note of your appliance's details and the Customer Service telephone number to find them again quickly.

21 How it works

Here, you can find the ideal settings for various types of food as well as the best accessories and cookware. We have perfectly tailored these recommendations to your appliance.

21.1 General cooking tips

Please take note of the following information when cooking all types of food.

- The temperature and cooking time depend on the amount of food and the recipe. Settings ranges are specified for this reason. Try using the lower values to start with.
- The setting values apply to food placed in the cooking compartment while the cooking compartment is still cold. Do not place accessories into the cooking compartment until it has finished preheating.
- Remove any accessories that are not being used from the cooking compartment.

21.2 Baking tips

- Dark-coloured metal baking tins are most suitable for baking cakes, bread and other baked goods.
- Use wide, shallow cookware for bakes and gratins. Food takes longer to cook in deep, narrow cookware and it browns more on top.
- Silicone moulds are not suitable.
- If you are cooking bakes directly in the universal pan, place the universal pan into the cooking compartment at level 2.
- The setting values for bread dough apply to both dough placed on a baking tray and dough placed in a loaf tin.

ATTENTION!
When the cooking compartment is hot, any water inside it will create steam. The change in temperature may cause damage.

- ▸ Never pour water into the cooking compartment when it is still hot.
- ▸ Never place cookware containing water on the cooking compartment floor.

Shelf positions

If you are using the 4D hot air heating function, you can choose between shelf positions 1, 2, 3 and 4.

Baking on one level	Shelf position
Tall baked items and tins/dishes on the wire rack	2
Shallow baked items/baking trays	3

Baking on two or more levels	Shelf position
2 levels ■ Universal pan ■ Baking tray	 3 1
2 levels ■ Baking tins on two wire racks	 3 1
3 levels ■ Baking tray ■ Universal pan ■ Baking tray	 5 3 1
4 levels ■ 4 wire racks with greaseproof paper	 5 3 2 1

Use the 4D hot air heating function.

Note: Items that are placed in the appliance on baking trays or in baking tins/dishes at the same time will not necessarily be ready at the same time.

21.3 Roasting, braising and grilling tips

- The recommended settings are for fridge-temperature food and unstuffed, oven-ready poultry.
- Place the poultry onto the cookware breast-side or skin-side down.
- Turn roasting joints, grilled items or whole fish after approx. ½ to ⅔ of the specified time.

Roasting on the wire rack

Food roasted on the wire rack will become very crispy on all sides. You can roast large poultry, for example, or multiple individual pieces at the same time.

- Roast pieces of a similar weight and thickness. The grilled food will brown evenly and will remain succulent and juicy.
- Place the food to be roasted directly on the wire rack.
- To catch any liquids that drip down, place the universal pan, with the wire rack inside it, into the cooking compartment at the specified shelf height.
- Add up to ½ litre of water to the universal pan, depending on the size and type of food that you want to roast.
  You can make a sauce from the juices that are collected. This also means that less smoke is produced and the cooking compartment does not become as dirty.

Roasting in cookware

If you cover the cookware when you cook your food, this will keep the cooking compartment cleaner.

General information about roasting in cookware

- Use heat-resistant, ovenproof cookware.
- Place the cookware on the wire rack.
- Glass cookware is best.
- Follow the manufacturer's instructions for your roasting dishes.

Roasting in uncovered cookware

- Use a deep roasting dish.
- If you do not have any suitable cookware, you can use the universal pan.

Roasting in covered cookware

- Use a suitable lid that seals well.
- When roasting meat, there should be at least 3 cm between the food and the lid. The meat may expand.

⚠ WARNING – Risk of scalding!

Very hot steam may escape when the lid is opened after cooking. Steam may not be visible, depending on the temperature.

- ▸ Lift the lid in such a way that the hot steam can escape away from you.
- ▸ Keep children away from the appliance.

Grilling

Grill food if you want it to be crispy.

- When grilling several food items, choose pieces that are of a similar weight and thickness. The grilled food will brown evenly and will remain succulent and juicy.
- Place the food to be grilled directly onto the wire rack.
- To catch any liquids that drip down, place the universal pan into the cooking compartment at least one level below the wire rack.

Notes

- The grill element switches on and off continuously. This is normal. The grill setting that you use determines how frequently this occurs.
- Smoke may be produced when grilling.

21.4 Cooking frozen products

- Do not use heavily frosted frozen products.
- Remove any ice.
- Some frozen products may be unevenly pre-baked. Uneven browning may remain even after baking.

21.5 Cooking ready meals

- Take ready meals out of the packaging.
- If you are warming or cooking the ready meal in cookware, make sure that the cookware is heat-resistant.

21.6 List of foods

Recommended settings for a variety of foods, sorted into food categories.

Recommended settings for various types of food

Food	Accessory/cookware	Shelf position	Heating function	Temperature in °C	Cooking time in mins
Sponge cake, 2 levels	Ring-shaped tin or Loaf tin	3+1		140–160	60–80
Sponge cake, delicate	Loaf tin	2		150–170	60–80
Fruit tart or cheesecake with shortcrust pastry base	Springform cake tin, diameter 26 cm	2		170–190	60–80
Sponge cake, 6 eggs	Springform cake tin, diameter 28 cm	2		150–170 [1]	30–50
Sponge cake, 6 eggs	Springform cake tin, diameter 28 cm	2	eco	150–160	50–60
Shortcrust tart with moist topping	Universal pan	3		160–180	55–75

[1] Preheat the appliance.

Food	Accessory/cookware	Shelf position	Heating function	Temperature in °C	Cooking time in mins
Yeast cake with moist topping	Universal pan	3		180–200	30–40
Swiss roll	Baking tray	3		180–200 [1]	8–15
Muffins	Muffin tray	3		170–190	15–20
Small yeast cakes	Baking tray	3		160–180	25–35
Biscuits	Baking tray	3		140–160	15–30
Biscuits, 2 levels	Universal pan + Baking tray	3+1		140–160	15–30
Biscuits, 3 levels	1 pcs Universal pan + 2 pcs Baking tray	5+3+1		140–160	15–30
Bread, without a tin, 750 g	Universal pan or Loaf tin	2		**1.** 210–220 [1] **2.** 180–190	**1.** 10–15 **2.** 25–35
Bread, without a tin, 1500 g	Universal pan or Loaf tin	2		**1.** 210–220 [1] **2.** 180–190	**1.** 10–15 **2.** 40–50
Bread, without a tin, 1500 g	Loaf tin	2		200–210	35–45
Flatbread	Universal pan	3		250 - 270	20 - 25
Bread rolls, fresh	Baking tray	3		180–200	20–30
Pizza, fresh, on a baking tray	Baking tray	3		200 - 220	25 - 35
Pizza, fresh, on a baking tray, on 2 levels	Universal pan + Baking tray	3+1		180 - 200	35 - 45
Pizza, fresh, thin-crust, on a pizza tray	Pizza tray	2		220 - 230	20 - 30
Quiche	Tart dish or tin , Black tray	3		190–210	30–40
Tarte flambée	Universal pan	3		260 - 280 [1]	10 - 15
Bake, savoury, cooked ingredients	Ovenproof dish	2		200 - 220	30 - 50
Potato gratin, raw ingredients, 4 cm deep	Ovenproof dish	2		160 - 190	50 - 70
Chicken, 1 kg, unstuffed	Wire rack	2		200 - 220	60 - 70
Small chicken portions, 250 g each	Wire rack	3		220 - 230	30 - 35
Goose, unstuffed, 3 kg	Wire rack	2		160 - 180	120 - 150
Joint of pork without rind, e.g. neck, 1.5 kg	Uncovered cookware	2		180 - 190	110 - 130
Joint of pork without rind, e.g. neck, 1.5 kg	Uncovered cookware	2		190–200	120–140
Fillet of beef, medium, 1 kg	Wire rack	2		210 - 220	40 - 50
Pot-roasted beef, 1.5 kg	Covered cookware	2		200 - 220	130 - 160
Pot-roasted beef, 1.5 kg	Covered cookware	2		200 - 220	140 - 160
Sirloin, medium, 1.5 kg	Wire rack	2		220 - 230	60 - 70
Burger, 3-4 cm thick	Wire rack	4		3	25 - 30
Leg of lamb, boned, medium, 1.5 kg	Uncovered cookware	2		170 - 190	50 - 80
Fish, grilled, whole, 300 g, e.g. trout	Wire rack	2		170 - 190	20 - 30

[1] Preheat the appliance.

Yoghurt

Use your appliance to make yoghurt.

Making yoghurt

1. Remove the accessories and shelves from the cooking compartment.
2. Heat 1 litre of whole milk (3.5% fat) to 90 °C on the hob and then leave it to cool down to 40 °C.
   It is sufficient to heat UHT milk to 40 °C.
3. Mix 150 g of chilled yoghurt into the milk.
4. Pour the mixture into small containers, e.g. cups or small jars.
5. Cover the containers with film, e.g. cling film.
6. Place the containers on the cooking compartment floor.
7. Use the recommended settings when configuring the appliance settings.
8. After making the yoghurt, leave it to cool in the refrigerator for at least 12 hours.

Recommended settings for desserts and compote

Food	Accessory/cookware	Shelf position	Heating function	Temperature in °C	Cooking time in mins
Yoghurt	Individual moulds	Cooking compartment floor		40 - 45	8 - 9 hrs

21.7 Special cooking methods and other applications

Information and recommended settings for special cooking methods and other applications, e.g. slow cooking or preserving.

Defrosting

You can defrost frozen food in your appliance.

Tips for defrosting food

- You can use the appliance to defrost frozen fruit, vegetables or baked goods.
- It is better to defrost poultry, meat and fish in the refrigerator.
- Remove frozen food from its packaging before you defrost it.
- The recommended settings are for freezer-temperature food (-18 °C).
- When defrosting food, use the following shelf positions:
  - 1 wire rack: Shelf position 2
  - 2 wire racks: Shelf positions 3 + 1
- Stir or turn the food 1-2 times during defrosting. Turn large items several times. Split the food into smaller pieces as it defrosts.
  Remove pieces that have already defrosted from the cooking compartment.
- Once the food has defrosted, switch off the appliance and leave the food in the appliance for another 10 to 30 minutes to allow the temperature to equalise.

Keeping food warm

Tips for keeping food warm

- You can keep cooked food warm at 70 °C using the "top/bottom heating" function. This prevents condensation from forming and you will not have to wipe down the cooking compartment.
- To prevent the food from drying out, you can cover it.
- Do not keep food warming for longer than 2 hours.
- Be aware that some types of food will actually continue cooking when you are keeping them warm in the oven.

21.8 Test dishes

The information in this section is provided for test institutes to facilitate testing of the appliance in accordance with EN 60350-1.

Baking

- The setting values apply to food that is placed into a cold cooking compartment.
- Please take note of the information on preheating in the recommended settings tables. These setting values assume that the rapid heat-up function is not being used.
- For baking, use the lower of the specified temperatures to start with.
- Items that are placed in the appliance on baking trays or in baking tins/dishes at the same time will not necessarily be ready at the same time.
- Shelf positions when baking on 2 levels:
  - Universal pan: Shelf position 3
    Baking tray: Shelf position 1
  - Baking tins/dishes on the wire rack:
    First wire rack: Shelf position 3
    Second wire rack: Shelf position 1
- Shelf positions when baking on 3 levels:
  - Baking tray: Shelf position 5
  - Universal pan: Shelf position 3
  - Baking tray: Shelf position 1
- Hot water sponge cake
  - When baking on two levels, place the springform tins at diagonally opposite corners of the wire racks.

Recommended settings for baking

Food	Accessory/cookware	Shelf position	Heating function	Temperature in °C	Cooking time in mins
Viennese whirls	Baking tray	3		140 - 150 [1]	25 - 40
Viennese whirls	Baking tray	3		140 - 150 [1]	25 - 40
Viennese whirls, on 2 levels	Universal pan + Baking tray	3+1		140 - 150 [1]	30 - 40
Viennese whirls, on 3 levels	x 2 Baking tray + x 1 Universal pan	5+3+1		130 - 140 [1]	35 - 55
Small cakes	Baking tray	3		160 [1]	20 - 30
Small cakes	Baking tray	3		150 [1]	25 - 35
Small cakes, on 2 levels	Universal pan + Baking tray	3+1		150 [1]	25 - 35
Small cakes, on 3 levels	x 2 Baking tray + x 1 Universal pan	5+3+1		140 [1]	35 - 45
Hot water sponge cake	Springform cake tin, diameter 26 cm	2		160 - 170 [2]	25 - 35
Hot water sponge cake	Springform cake tin, diameter 26 cm	2		160 - 170 [2]	30 - 40
Hot water sponge cake, on 2 levels	Springform cake tin, diameter 26 cm	3+1		150 - 170 [2]	30 - 50

[1] Preheat the appliance for five minutes. Do not use the rapid heating function.
[2] Preheat the appliance. Do not use the rapid heating function.

Recommended settings for grilling

Food	Accessory/cookware	Shelf position	Heating function	Temperature in °C/grill setting	Cooking time in mins
Toasting bread	Wire rack	5		3 [1]	4 - 6

[1] Do not preheat the appliance.

22 Installation instructions

Observe this information when installing the appliance.

22.1 General installation instructions

Follow these instructions before you start with the installation of the appliance.

- The safe operation of this appliance can only be guaranteed if it has been installed to a professional standard in accordance with these installation instructions. The installer shall be liable for damages incurred as a result of incorrect installation.
- Do not use the door handle for the transport or installation.
- Check the appliance for damage after unpacking it. Do not connect the appliance if it has been damaged in transit.
- Before starting up the appliance, remove any packaging material and adhesive film from the cooking compartment and the door.
- Proceed in accordance with the installation sheets for installing accessories.

- Fitted units must be heat-resistant up to 95 °C, and adjacent unit fronts up to 70 °C.
- Do not install the appliance behind a decorative door or the door of a kitchen unit. There is a risk of overheating.
- Cut-out work on the units should be carried out before installing the appliance. Remove any shavings. Otherwise, the correct operation of electrical components may be adversely affected.
- The mains socket for the appliance must either be located in the hatched area a or outside of the area where the appliance is installed.
  Any unsecured units must be secured to the wall using a standard bracket b.

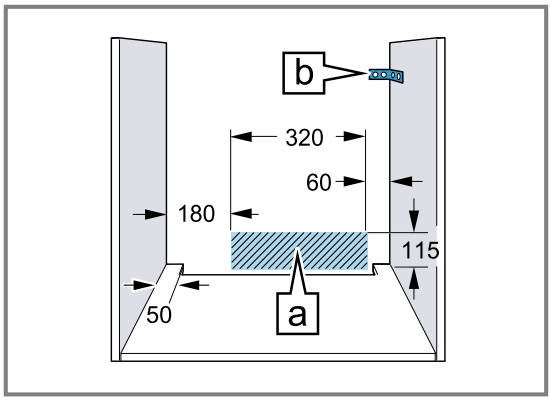

- Wear protective gloves so that you do not cut yourself. Parts that are accessible during installation may have sharp edges.
- Dimensions of the figures in mm.

⚠ WARNING – Danger: Magnetism!

Permanent magnets are used in the control panel or in the controls. They may affect electronic implants, e.g. pacemakers or insulin pumps.

- Wearers of electronic implants must stay at least 10 cm away from the control panel or controls during the installation.

⚠ WARNING – Risk of fire!

It is dangerous to use an extended power cord and non-approved adapters.

- Do not use multiple socket strips.
- Only use extension cables that are certified, have a minimum cross section of 1.5 mm² and comply with the applicable national safety requirements.
- If the power cord is too short, contact customer service.
- Only use adapters approved by the manufacturer.

ATTENTION!

Carrying the appliance by the door handle could break it. The door handle cannot support the weight of the appliance.

- Do not carry or hold the appliance by the door handle.

22.2 Appliance dimensions

You will find the dimensions of the appliance here

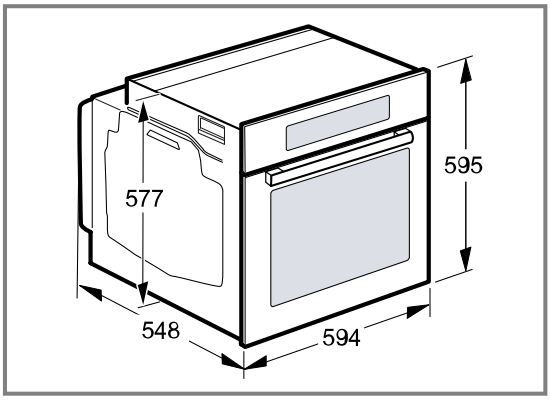

22.3 Installation below a worktop

Observe the installation dimensions and the installation instructions when installing below a worktop.

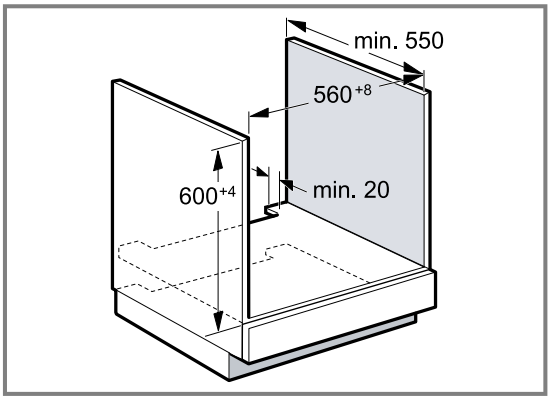

- To ventilate the appliance, the intermediate floor must have a ventilation cut-out.
- The worktop must be secured to the built-in unit.
- Observe any available installation instructions for the hob.

22.4 Installation underneath a hob

If the appliance is installed under a hob, the following minimum dimensions must be adhered to (including substructure, if applicable).

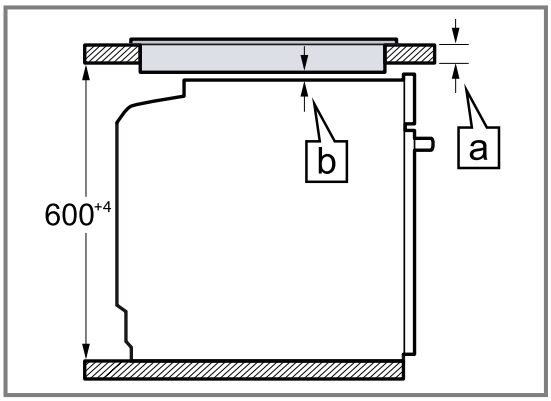

The minimum worktop thickness b a is based on the required minimum clearance a.

Hob type	a raised in mm	a flush in mm	b in mm
Induction hob	37	38	5
Full-surface induction hob	47	48	5
Gas hob	27	38	5
Electric hob	27	30	2

22.5 Installation in a tall unit

Observe the installation dimensions and the installation instructions when installing in a tall unit.

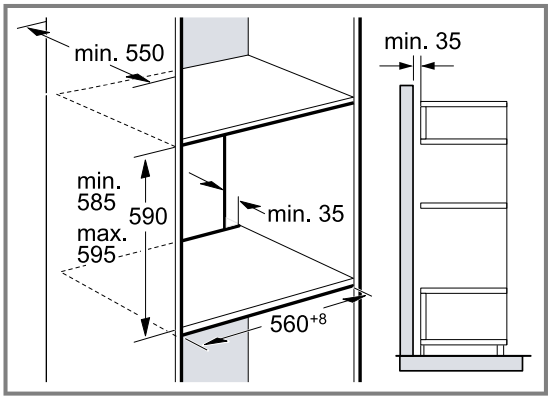

- To ventilate the appliance, the intermediate floors must have a ventilation cut-out.
- If the tall unit has another back panel in addition to the element back panels, this must be removed.
- Only fit the appliance up to a height which allows accessories to be easily removed.

22.6 Corner installation

Observe the installation dimensions and the installation instructions when installing in a corner.

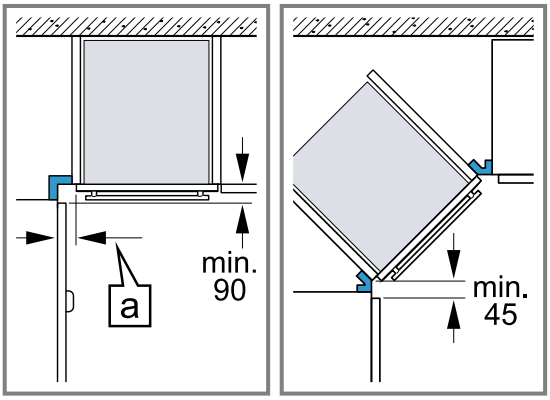

- To ensure that the appliance door can be opened, you must take the minimum dimensions into consideration when installing in a corner. The dimension a is dependent on the thickness of the unit front and the handle.

22.7 Electrical connection

In order to safely connect the appliance to the electrical system, follow these instructions.

- The appliance corresponds to protection class I and must only be operated with a protective earth connection.
- The fuse protection must correspond to the power rating specified on the appliance's rating plate and to local regulations.
- The appliance must be disconnected from the power supply whenever installation work is being carried out.
- The appliance must only be connected using the power cable provided.

- The power cable must be plugged in at the rear of the appliance until you hear a clicking sound. A 3 m power cable can be obtained from the after-sales service.
- The power cable must only be replaced with a cable from the original manufacturer. This is available from after-sales service.
- Contact protection must be ensured during the installation.

Electrically connect the appliance with the protective contact plug

Note: The appliance must only be connected to a protective contact socket that has been correctly installed.

- Insert the plug into the protective contact socket. When the appliance is installed, the mains plug of the power cord must be freely accessible. If free access to the mains plug is impossible, an all-pole isolating switch must be integrated into the permanent electrical installation in accordance with the installation regulations.

Electrically connecting an appliance without a protective contact plug

Note: Only a licensed professional may connect the appliance. Damage caused by incorrect connection is not covered under the warranty.
An all-pole isolating switch must be integrated into the permanent electrical installation according to the installation regulations.

1. Identify the phase and neutral conductors in the socket.
   The appliance may be damaged if it is not connected correctly.
2. Connect the hob in accordance with the connection diagram.
   See the rating plate for the voltage.
3. Connect the wires of the mains power cable according to the colour coding:
   – Green/yellow = Protective conductor ⏚
   – Blue = Neutral conductor
   – Brown = Phase (external conductor)

22.8 Installing the appliance

1. Slide the appliance in fully and centre it.

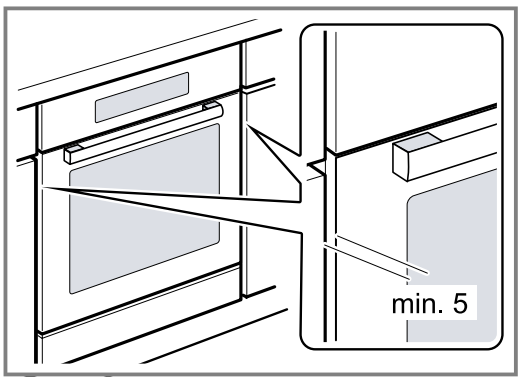

2. Screw the appliance into place.

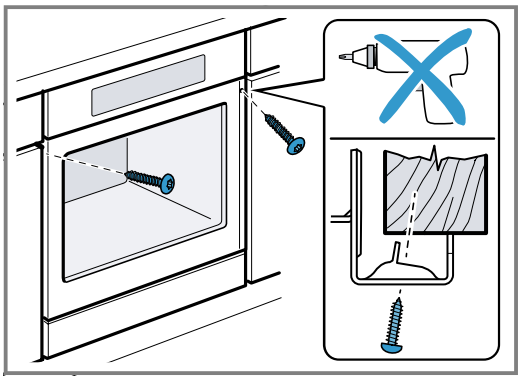

3. For handleless kitchens with vertical bar handle strips:
   – Attach a suitable filling piece ① in order to cover any sharp edges and to guarantee a safe installation.
   – Pre-drill aluminium profiles to establish a screw connection ②.
   – Secure the appliance using a suitable screw ③.

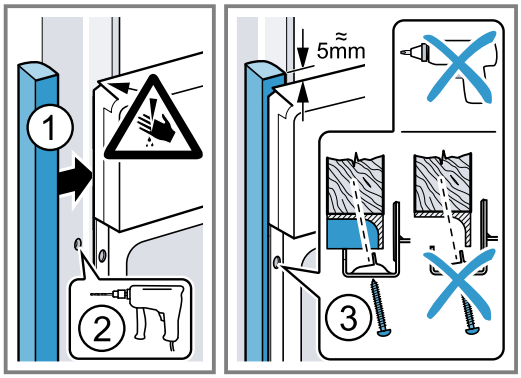

Note: The gap between the worktop and the appliance must not be closed by additional battens.
Thermal insulation strips must not be fitted to the side panels of the surround unit.

22.9 Removing the appliance

1. Disconnect the appliance from the power supply.
2. Undo the fastening screws.
3. Lift the appliance slightly and pull it out completely.

Thank you for buying a Bosch Home Appliance!

Register your new device on MyBosch now and profit directly from:

- **Expert tips & tricks for your appliance**
- **Warranty extension options**
- **Discounts for accessories & spare-parts**
- **Digital manual and all appliance data at hand**
- **Easy access to Bosch Home Appliances Service**

Free and easy registration – also on mobile phones:
www.bosch-home.com/welcome

Looking for help? You'll find it here.

Expert advice for your Bosch home appliances, help with problems or a repair from Bosch experts.
Find out everything about the many ways Bosch can support you:
www.bosch-home.com/service
Contact data of all countries are listed in the attached service directory.

Robert Bosch Hausgeräte GmbH
Carl-Wery-Straße 34
81739 München
GERMANY
www.bosch-home.com

9001680396 (011201)
en

Valid within Great Britain:
Imported to Great Britain by
BSH Home Appliances Ltd.
Grand Union House
Old Wolverton Road
Wolverton, Milton Keynes
MK12 5PT
United Kingdom