BOSCH

Register your new device on MyBosch now and get free benefits: **bosch-home.com/welcome**

MyBosch

Washing machine

WGG244ABSN

[en] User manual and installation instructions

Futher information and explanations are available online:

Table of contents

1 Safety 4
1.1 General information 4
1.2 Intended use 4
1.3 Restriction on user group 4
1.4 Safe installation 5
1.5 Safe use 7
1.6 Safe cleaning and maintenance 9

2 Preventing material damage 10

3 Environmental protection and saving energy 11
3.1 Disposing of packaging 11
3.2 Save energy and conserve resources 11
3.3 Energy saving mode 11

4 Installation and connection 12
4.1 Unpacking the appliance 12
4.2 Contents of package 12
4.3 Requirements for the installation location 12
4.4 Removing the transit bolts 13
4.5 Connecting the appliance 14
4.6 Aligning the appliance 15
4.7 Connecting the appliance to the electricity supply 16

5 Familiarising yourself with your appliance 17
5.1 Appliance 17
5.2 Detergent drawer 17
5.3 Control panel 18

6 Before using for the first time ... 19
6.1 Starting an empty washing cycle 19

7 Display 20

8 Buttons 23

9 Programmes 25

10 Accessories 29

11 Laundry 29
11.1 Preparing the laundry 29

12 Detergents and care products 30

13 Basic operation 30
13.1 Switching on the appliance 30
13.2 Setting a programme 30
13.3 Adjusting the programme settings 30
13.4 Loading laundry 31
13.5 Adding detergent and care product 31
13.6 Starting the programme 31
13.7 Soaking laundry 31
13.8 Adding laundry 31
13.9 Cancelling the programme 32
13.10 Resuming the programme when the programme status is Rinse Hold 32
13.11 Unloading the laundry 32
13.12 Switching off the appliance 32

14 Childproof lock 32
14.1 Activating the childproof lock 32
14.2 Deactivating the childproof lock 32

15 Intelligent dosing system 33
15.1 Starting the programme with intelligent dosing system 33
15.2 Filling the dispensers 33
15.3 Basic dosage 34

16 Basic settings..... 35
16.1 Overview of the basic settings..... 35
16.2 Changing the basic settings..... 36

17 Cleaning and servicing 36
17.1 Cleaning the drum..... 36
17.2 Cleaning the detergent drawer..... 36
17.3 Cleaning the drain pump..... 38

18 Troubleshooting..... 41
18.1 Emergency release 52

19 Transportation, storage and disposal 52
19.1 Removing the appliance 52
19.2 Inserting the transit bolts..... 52
19.3 Using the appliance again 52
19.4 Disposing of old appliance 53

20 Customer Service..... 53
20.1 Product number (E-Nr.) and production number (FD)..... 53

21 Consumption values..... 54

22 Technical data 54

1 Safety

Observe the following safety instructions.

1.1 General information

- Read this instruction manual carefully.
- Keep the instruction manual and the product information safe for future reference or for the next owner.
- Do not connect the appliance if it has been damaged in transit.

1.2 Intended use

Only use this appliance:
- For washing machine-washable fabrics and hand-washable wool in accordance with the care label.
- With tap water and commercially available detergents and care products suitable for washing machines.
- In private households and in enclosed spaces in a domestic environment.
- Up to an altitude of max. 4000 m above sea level.

1.3 Restriction on user group

This appliance may be used by children aged 8 or over and by people who have reduced physical, sensory or mental abilities or inadequate experience and/or knowledge, provided that they are supervised or have been instructed on how to use the appliance safely and have understood the resulting dangers.
Do not let children play with the appliance.
Cleaning and user maintenance must not be performed by children unless they are being supervised.
Keep children under the age of 3 years and pets away from the appliance.

1.4 Safe installation

Take note of the safety instructions when installing the appliance.

⚠ WARNING – Risk of electric shock!

Incorrect installation is dangerous.

- Connect and operate the appliance only in accordance with the specifications on the rating plate.
- Connect the appliance to a power supply with alternating current only via a properly installed socket with earthing.
- The protective conductor system of the domestic electrical installation must be properly installed. The installation must have a sufficiently large cross section.
- When using a residual current circuit breaker, only use a type with the ⊠ mark.
- Never equip the appliance with an external switching device, e.g. a timer or remote control.
- When the appliance is installed, the mains plug of the power cord must be freely accessible. If free access is not possible, an all-pole isolating switch must be installed in the permanent electrical installation according to the installation regulations.
- When installing the appliance, check that the power cable is not trapped or damaged.

If the insulation of the power cord is damaged, this is dangerous.

- Never let the power cord come into contact with hot appliance parts or heat sources.
- Never let the power cord come into contact with sharp points or edges.
- Never kink, crush or modify the power cord.

⚠ WARNING – Risk of fire!

It is dangerous to use an extended power cord and non-approved adapters.

- Do not use extension cables or multiple socket strips.
- Only use adapters and power cords approved by the manufacturer.

- If the power cord is too short and a longer one is not available, please contact an electrician to have the domestic installation adapted.

⚠ WARNING – Risk of injury!

The high weight of the appliance may result in injury when lifted.

- Do not lift the appliance on your own.

If this appliance is not correctly installed in a washer-dryer stack, the installed appliance may fall.

- Only stack the dryer on a washing machine using the connection kit from the dryer manufacturer . No other installation method is permitted.
- Do not install the appliance in a washer-dryer stack if the dryer manufacturer does not offer a suitable connection kit.
- Do not install appliances from different manufacturers and with varying depths and widths in a washer-dryer stack.
- Do not install a washer-dryer stack on a platform; the appliances may tip over.

⚠ WARNING – Risk of suffocation!

Children may put packaging material over their heads or wrap themselves up in it and suffocate.

- Keep packaging material away from children.
- Do not let children play with packaging material.

⚠ CAUTION – Risk of injury!

The appliance may vibrate or move when in use.

- Place the appliance on a clean, even, solid surface.
- Align the appliance using the appliance feet and a spirit level.

If hoses and power cords have been laid incorrectly, this causes a tripping hazard.

- Lay hoses and power cords in such a way that there is no risk of tripping.

If the appliance is moved by holding onto protruding components, such as the appliance door, the parts may break off.

- Do not move the appliance by holding onto protruding parts.

⚠ CAUTION – Risk of cutting!

Touching sharp edges on the appliance may lead to cuts.

- ▸ Do not touch the sharp edges on the appliance.
- ▸ Wear protective gloves when installing and transporting the appliance.

1.5 Safe use

⚠ WARNING – Risk of electric shock!

If the appliance or the power cord is damaged, this is dangerous.

- ▸ Never operate a damaged appliance.
- ▸ Never pull on the power cord to unplug the appliance. Always unplug the appliance at the mains.
- ▸ If the appliance or the power cord is damaged, immediately unplug the power cord or switch off the fuse in the fuse box and turn off the water tap.
- ▸ Call customer services. → *Page 53*

An ingress of moisture can cause an electric shock.

- ▸ Only use the appliance in enclosed spaces.
- ▸ Never expose the appliance to intense heat or humidity.
- ▸ Do not use steam- or high-pressure cleaners, hoses or sprays to clean the appliance.

⚠ WARNING – Risk of harm to health!

Children can lock themselves in the appliance, thereby putting their lives at risk.

- ▸ Do not install the appliance behind a door as this may obstruct the appliance door or prevent it from opening.
- ▸ With redundant appliances, unplug the power cord. Then cut through the cord and damage the lock on the appliance door beyond repair so that the appliance door will no longer close.

⚠ WARNING – Risk of suffocation!

Children may breathe in or swallow small parts, causing them to suffocate.

- ▸ Keep small parts away from children.
- ▸ Do not let children play with small parts.

⚠ WARNING – Risk of poisoning!
Detergents and care products may result in poisoning if consumed.
- If accidentally swallowed, seek medical advice.
- Keep detergents and care products out of the reach of children.

⚠ WARNING – Risk of explosion!
Laundry that has been pretreated with cleaning agents that contain solvents may cause an explosion in the appliance.
- Rinse pretreated laundry thoroughly with water before washing.

⚠ CAUTION – Risk of injury!
The covering plate may break if you stand on or climb onto the appliance.
- Do not stand on or climb onto the appliance.

The appliance may tip over if you sit on or lean against the open door.
- Do not sit on or lean against the appliance door.
- Do not place any objects on the appliance door.

Reaching into the drum while it is still turning may cause hand injuries.
- Wait for the drum to come to a complete stop before reaching inside.

⚠ CAUTION – Risk of scalding!
When you wash at high temperatures, the detergent solution gets hot.
- Do not touch the hot detergent solution.

⚠ CAUTION – Risk of chemical burns!
If the detergent drawer is opened, detergent and care products may spray out from the appliance. Contact with eyes or skin may cause irritation.
- Rinse eyes and/or skin thoroughly with clean water if they come into contact with detergents or care products.
- If accidentally swallowed, seek medical advice.
- Keep detergents and care products out of the reach of children.

1.6 Safe cleaning and maintenance

Take note of the safety instructions when cleaning and performing maintenance work on the appliance.

⚠ WARNING – Risk of electric shock!

Incorrect repairs are dangerous.

- ▸ Repairs to the appliance should only be carried out by trained specialist staff.
- ▸ Only use genuine spare parts when repairing the appliance.
- ▸ If the power cord of this appliance is damaged, it must be replaced by the manufacturer, the manufacturer's Customer Service or a similarly qualified person in order to prevent any risk.

An ingress of moisture can cause an electric shock.

- ▸ Do not use steam- or high-pressure cleaners, hoses or sprays to clean the appliance.

⚠ WARNING – Risk of injury!

The use of non-original spare parts and non-original accessories is dangerous.

- ▸ Only use the manufacturer's original spare parts and original accessories.

⚠ WARNING – Risk of poisoning!

Poisonous fumes may be given off if you use cleaning agents that contain solvents.

- ▸ Do not use cleaning agents that contain solvents.

2 Preventing material damage

Follow these instructions to avoid material damage and damage to the appliance.

ATTENTION!
The functionality of the appliance may be impaired if you use the wrong quantity of fabric softener, detergent, care product or cleaning agent.
- Follow the dosage recommendations from the manufacturer.

Exceeding the maximum load capacity impairs the function of the appliance.
- Observe the maximum load capacity for each programme and do not exceed it.
  → *"Programmes", Page 25*

The appliance is secured for transportation using transit bolts. Transit bolts which have not been removed may result in material damage and damage to the appliance.
- Before starting up the appliance, remove the transit bolts completely and keep them in a safe place.
- Before transport, fit the transit bolts fully in order to prevent damage in transit.

Material damage may be caused if the water inlet hose is connected incorrectly.
- Tighten the screw connections on the water inlet until they are hand-tight.
- Ideally, connect the water inlet hose directly to the water tap, without any additional connecting elements such as adapters, extensions, valves or similar.
- Ensure that the inner diameter of the water tap is at least 17 mm.
- Make sure that the length of the thread on the connection to the water tap is at least 10 mm.

If the water pressure is too high or too low, the appliance may not be able to operate properly.
- Ensure that the water pressure in the water supply system is at least 100 kPa (1 bar) and max. 1000 kPa (10 bar).
- If the water pressure exceeds the maximum value specified, a pressure-reducing valve must be installed between the drinking water connection and the hose set of the appliance.
- Do not connect the appliance to the mixer tap of an unpressurised hot-water boiler.

Modified or damaged water hoses may result in material damage and damage to the appliance.
- Never kink, crush, modify or cut through water hoses.
- Only use the water hoses supplied with the appliance or genuine spare hoses.
- Never re-use water hoses that have been used before.

Operating the appliance using water that is dirty or too hot may lead to material damage and damage to the appliance.
- Only operate the appliance with cold mains water.

Unsuitable cleaning products may damage the surfaces of the appliance.
- Do not use harsh or abrasive detergents.
- Do not use cleaning products with a high alcohol content.
- Do not use hard scouring pads or cleaning sponges.
- Clean the appliance with nothing but water and a soft, damp cloth.

- Remove all detergent residue, spray residue or other residues immediately if they come into contact with the appliance.

3 Environmental protection and saving energy

3.1 Disposing of packaging

The packaging materials are environmentally compatible and can be recycled.

- Sort the individual components by type and dispose of them separately.

3.2 Save energy and conserve resources

If you follow these instructions, your appliance will use less electricity and less water.

Choose programmes with low temperatures and longer wash times and use maximum load capacity.

- ✔ Energy consumption and water consumption is most efficient.

detergent based on the laundry's degree of soiling.

- ✔ For light to normal soiling, a smaller amount of detergent is sufficient. Observe the dosage recommendation from the detergent manufacturer.

Reduce the washing temperature for lightly and normally soiled laundry.

- ✔ At lower temperatures, the appliance consumes less energy. For light to normal soiling, lower temperatures than indicated on the care label are also sufficient.

Set the maximum spin speed if you want to dry the laundry in the tumble dryer afterwards.

- ✔ The drier the laundry, the shorter the programme duration when drying which, in turn, reduces energy consumption. A higher spin speed reduces the residual moisture in the laundry and increases the volume of the spin noise.

Wash the laundry without prewash.

- ✔ Washing with prewash increases the programme duration and increases energy and water consumption.

The appliance has a continuous automatic load adjustment function.

- ✔ Depending on the type of fabric and load capacity, the continuous automatic load adjustment function optimally adjusts the water consumption and programme duration.

The appliance comes with an AquaSensor.

- ✔ During the rinse cycle, the AquaSensor checks the degree of turbidity of the rinsing water, and adjusts the duration and number of rinse cycles accordingly.

3.3 Energy saving mode

If you do not use the appliance for an extended period, it automatically switches to energy-saving mode. Energy-saving mode ends when you use the appliance again.

4 Installation and connection

4.1 Unpacking the appliance

ATTENTION!
Objects remaining in the drum that are not designed for operation with the appliance may cause material damage and damage to the appliance.
- Remove these objects, along with all supplied accessories, from the drum before starting the appliance.

1. Remove any packaging and protective covers completely from the appliance.
   → *"Disposing of packaging", Page 11*
2. Check the appliance for visible damage.
3. Open the appliance door.
   → *"Basic operation", Page 30*
4. Remove any accessories from the drum.
5. Close the appliance door.

4.2 Contents of package

After unpacking all parts, check for any damage in transit and completeness of the delivery.

ATTENTION!
If the appliance is operated with incomplete or defective accessories, the appliance may not be able to operate properly, or this may result in material damage or damage to the appliance.
- Do not operate the appliance with incomplete or defective accessories.
- Replace the accessories in question before operating the appliance.
  → *"Accessories", Page 29*

Note: The appliance has been tested at the factory to check it is in working order. As a result, water stains may remain in the appliance. These marks will disappear after the first wash cycle.

The delivery consists of the following:
- Washing machine
- Accompanying documents
- Transit bolts
  → *"Removing the transit bolts", Page 13*
- Cover caps
- Connection adapter
- Water inlet hose
  → *"Connecting the water inlet hose", Page 14*

4.3 Requirements for the installation location

⚠ **WARNING**
Risk of electric shock!
The appliance contains live parts. Touching live parts is dangerous.
- Do not operate the appliance without a cover cap.

⚠ **WARNING**
Risk of injury!
When using the appliance on a base, the appliance may tip over.
- Always secure the feet of the appliance to a base using the manufacturer's fixing brackets → *Page 29* before using the appliance for the first time.

ATTENTION!
If residual water in the appliance freezes, this may cause damage to the appliance.
- Do not install or operate this appliance anywhere that is liable to experience frost or outdoors.

If the appliance is tilted at an angle greater than 40°, residual water may leak out of the appliance and cause material damage.
- Tilt the appliance carefully.
- Transport the appliance in an upright position.

Installation location	Requirements
Base 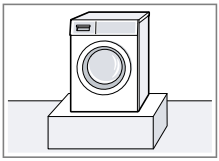	Secure the appliance with fixing brackets → *Page 29*.
Wooden joist floor 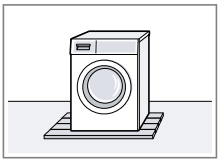	Place the appliance on a water-resistant wooden board (minimum thickness of 30 mm) which is screwed tightly to the floor.
Kitchen unit 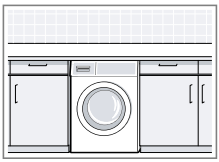	Only install the appliance underneath a continuous worktop that is securely connected to adjacent cabinets. Required niche width: 60 cm.

Installation location	Requirements
Against a wall 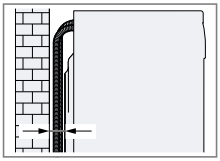	Do not trap the hoses and power cord between the wall and the appliance.

4.4 Removing the transit bolts

The appliance is secured for transportation using transit bolts on the rear of the appliance.

Note: Keep the transit bolt screws and the sleeves in a safe place for future transport → *Page 52*.

1. Pull the hoses out of the holders.

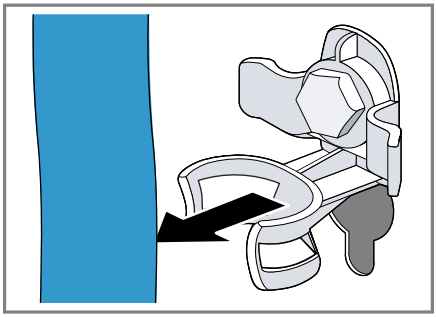

2. Unscrew ① and remove ② all screws for the 4 transit bolts with a WAF 13 wrench.

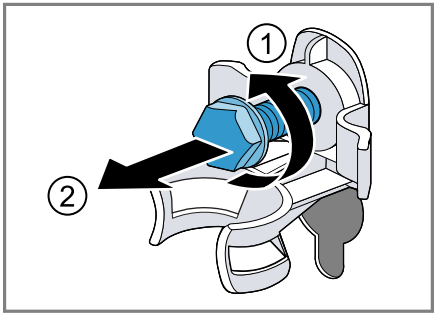

3. Remove the power cable from the holder.

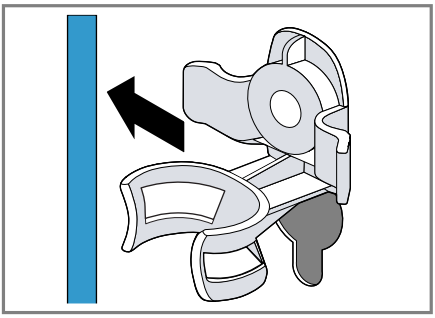

4. Remove the 4 sleeves.

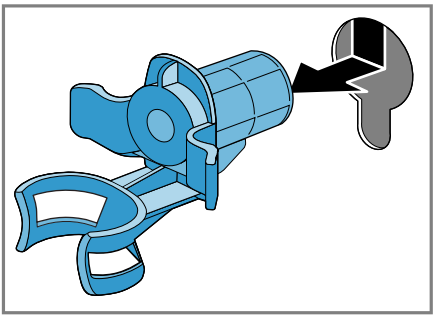

5. Put on the 4 cover caps.

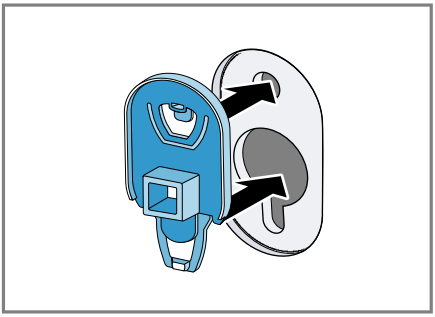

6. Press down on the 4 cover caps.

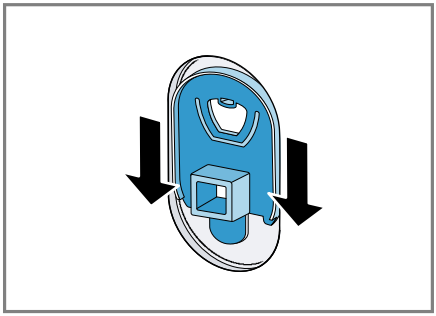

4.5 Connecting the appliance

Connecting the water inlet hose

1. Connect the water inlet hose.

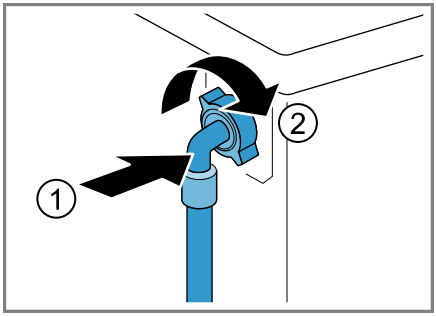

2. Connect the water inlet hose to a tap (26.4 mm = 3/4").

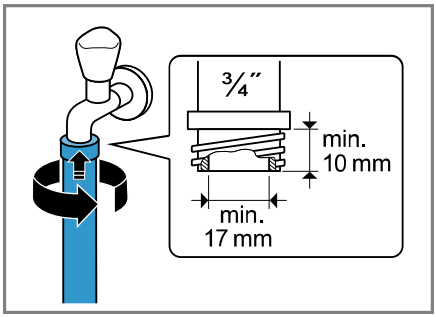

3. When connecting to a 21 mm = ½" tap, first fit the adapter with a sealing washer.

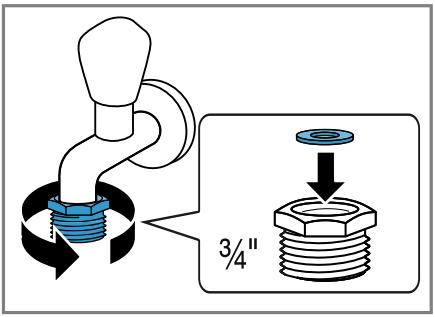

4. Open the water tap carefully and check that the connection points are tight.

Water outlet connection types

This information is intended to help you to connect this appliance to the water outlet.

ATTENTION!
When draining, the water outlet hose is subject to water pressure and may come loose from the installed connection point.
- Secure the water outlet hose against unintentional loosening.

Note: Observe the draining heights. The maximum draining height is 100 cm.

Siphon 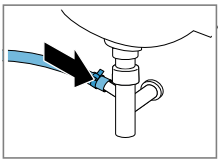	Secure the connection point with a (24–40 mm) hose clamp.
Sink 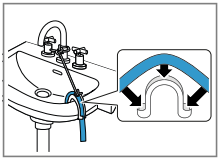	Fix and secure the water outlet hose with an elbow → *Page 29*.
Plastic pipe with rubber sleeve or gully 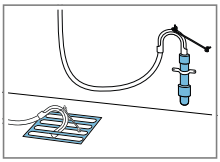	Fix and secure the water outlet hose with an elbow → *Page 29*.

4.6 Aligning the appliance

In order to reduce noise and vibration and to prevent the appliance from moving, align the appliance correctly.

1. Loosen the lock nuts using a WAF 17 wrench by turning it in a clockwise direction.

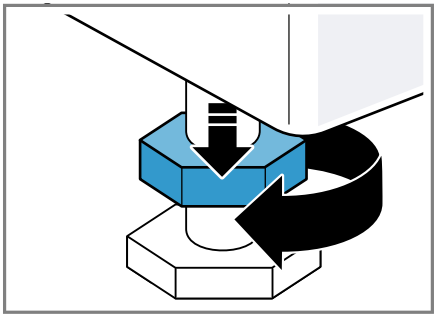

2. To align the appliance, turn the appliance feet. Check that the appliance is level using a spirit level.

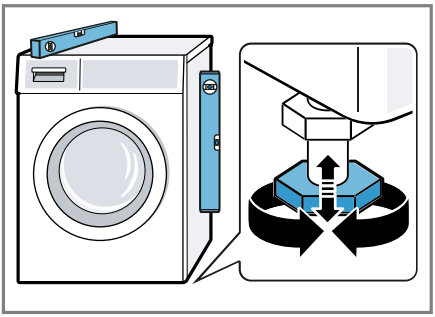

All appliance feet must stand firmly on the ground.

3. Screw the lock nuts tightly against the housing using a WAF 17 wrench.

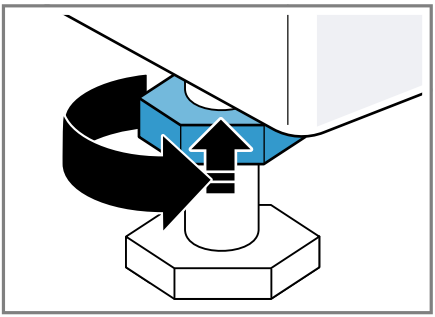

In doing so, hold the foot tight and do not adjust its height.

4.7 Connecting the appliance to the electricity supply

Note: Your electrical domestic installation for this appliance must comply with the local legal provisions and safety regulations, and should include a residual current circuit-breaker.

1. Insert the mains plug of the appliance's power cable in a socket nearby.

   The connection details of the appliance can be found under Technical data → *Page 54*.

2. Check the mains plug is inserted properly.

5 Familiarising yourself with your appliance

5.1 Appliance

You can find an overview of the parts of your appliance here.

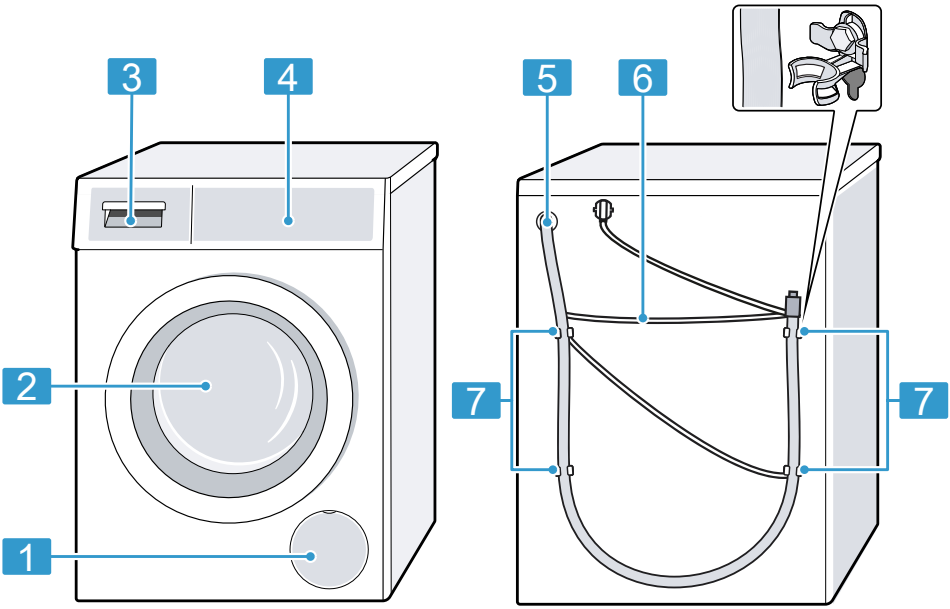

On certain models, specific details such as the colour and shape may differ from those pictured.

1	Maintenance flap for the drain pump → *Page 38*
2	Door
3	Detergent drawer → *Page 17*
4	Control panel → *Page 18*
5	Water outlet hose → *Page 15*
6	Power cord → *Page 16*
7	Transit bolts → *Page 13*

5.2 Detergent drawer

Note: Observe the manufacturer's instructions on the use and dosage of the detergent and care product and the information in the programme descriptions.
→ *"Programmes", Page 25*

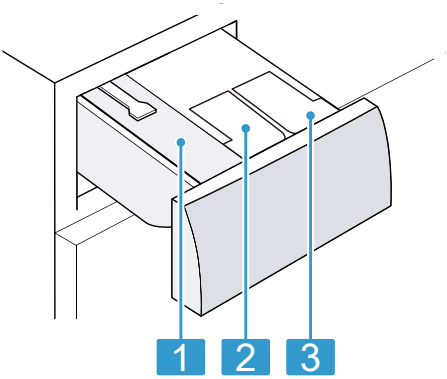

1	Manual dosing compartment
2	❀: Dispenser for fabric softener
3	♢: Dispenser for liquid detergent

5.3 Control panel

You can use the control panel to configure all functions of your appliance and to obtain information about the operating status.

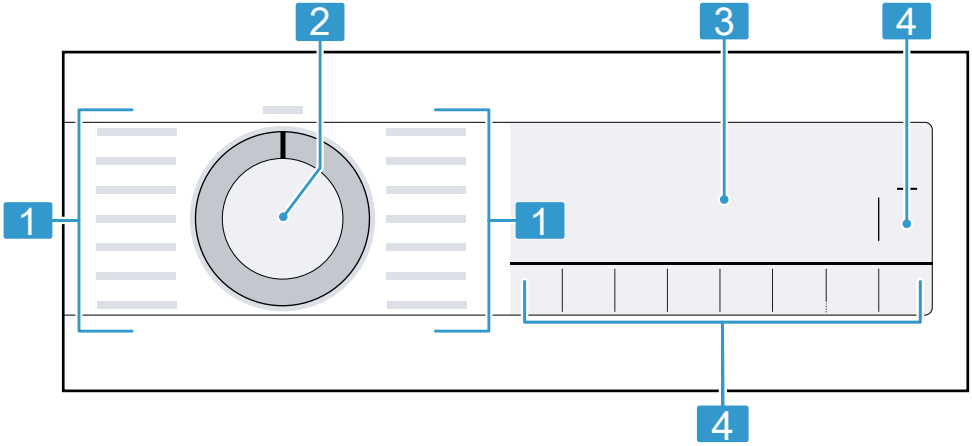

1	Programmes → *Page 25*
2	Programme selector → *Page 30*
3	Display → *Page 20*
4	Buttons → *Page 23*

6 Before using for the first time

Prepare the appliance for use.

6.1 Starting an empty washing cycle

Your appliance was inspected thoroughly before leaving the factory. To remove any residual water, run the first wash cycle without any laundry.

1. Turn the programme selector to **Drum Clean**.
2. Close the door.
3. Pull out the detergent drawer.
4. Pour approx. 1 litre of water into the manual dosing compartment.

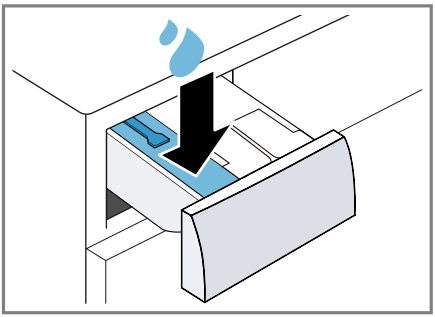

5. Add washing powder to the manual dosing compartment.

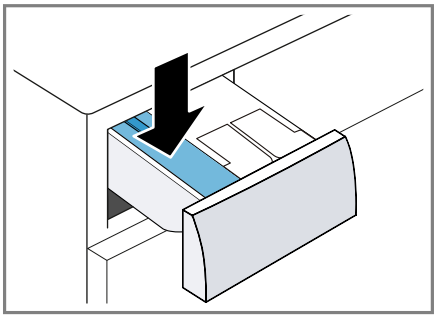

To prevent foaming, use only half of the amount of detergent recommended by the detergent manufacturer for light soiling. Do not use detergent suitable for woollens or delicates.

6. Push in the detergent drawer.
7. Press ▷II (Start/Reload) to start the programme.

✔ The display shows the remaining programme duration.
✔ After the programme has ended, the display shows: "End".

8. Start the first wash cycle or set the programme selector to ○ to switch off the appliance.
→ *"Basic operation", Page 30*

7 Display

The display shows the current settings, options or relevant information.

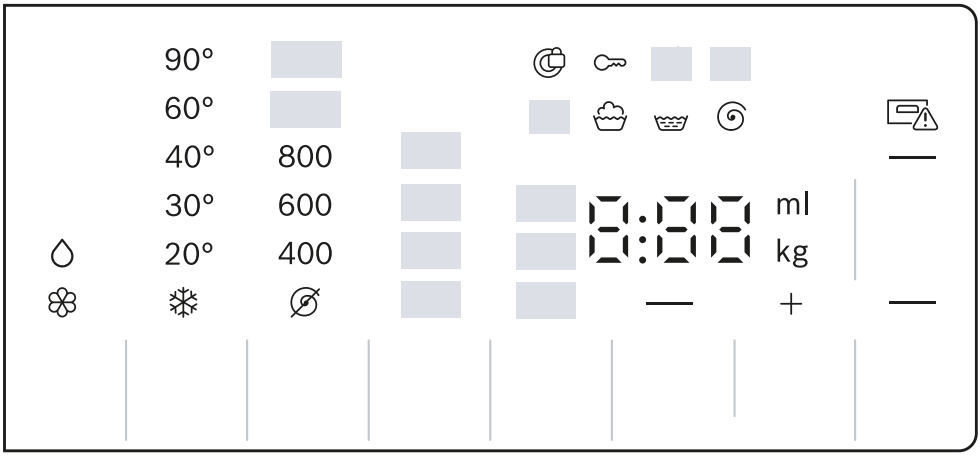

Example: Display

display	Designation	More information
0:40 [1]	Programme duration/programme time remaining	Approximate expected programme duration or programme time remaining.
"10" / + [1]	"Ready in" time	→ *"Buttons", Page 23*
9,0 kg [1]	Recommended load	The maximum load capacity for the selected programme in kg.
- 1400	Spin speed	Set spin speed in rpm. = No final spin, only draining : Rinse Hold, no draining
– 90	Temperature	Set temperature in °C. → *"Buttons", Page 23* (cold)
—	Start/Pause	Start, cancel or pause ■ Lights up: The programme is running and can be cancelled or paused. ■ Flashes: The programme can be started or continued.
	Prewash	Programme status
	Wash	Programme status

[1] Example

display	Designation	More information
	Rinse	Programme status
	Spin	Programme status
End	End of programme	Programme status
	Childproof lock	■ lights up: The childproof lock is activated. ■ flashes: The childproof lock is activated and the appliance has been operated. → *"Deactivating the childproof lock", Page 32*
	Crease-reduction function	The crease-reduction function is activated. → *"Buttons", Page 24*
	Prewash	Prewash is activated. → *"Buttons", Page 24*
	Rinse Hold	Rinse Hold is activated.
	SpeedPerfect	Short wash activated. → *"Buttons", Page 23*
	Blood	The stain type is activated.
	Grass	The stain type is activated.
	Red Wine	The stain type is activated.
	Grease and oil	The stain type is activated.
	Reminder to clean the drum	Flashes: Drum is dirty. Run the Drum Clean programme for cleaning and caring for the drum and the outer tub. → *"Cleaning the drum", Page 36*
	Dispenser for liquid detergent	■ Lights up: The intelligent dosing system for liquid detergent is activated. ■ Flashes: The fill level of the dispenser is below the minimum level. → *"Intelligent dosing system", Page 33* (liquid detergent)
	Dispenser for fabric softener.	■ Lights up: The intelligent dosing system for fabric softener is activated. ■ Flashes: The fill level of the dispenser is below the minimum level. → *"Intelligent dosing system", Page 33* (fabric softener)

[1] Example

display	Designation	More information
50 ml [1]	Basic dosage	Basic dosage for detergent or fabric softener. → *"Basic dosage", Page 34*
	Door	■ Lights up: The door is locked and cannot be opened. ■ Flashes: The door is not closed properly. ■ Off: The door is unlocked and can be opened.
	Tap	■ No water pressure. ■ The water pressure is too low.
	Detergent drawer	The detergent drawer has not been pushed in fully.
E:35 / -10 [1]	Error	Error code, error display, signal.

[1] Example

8 Buttons

The selection of programme settings depends on the programme that is set.

Button	Selection	More information
(Start/Reload)	■ Start ■ Cancel ■ Pause	Start, cancel or pause the programme.
(SpeedPerfect)	■ Activate ■ Deactivate	Activate or deactivate a shorter programme duration. **Note:** Energy consumption increases. The washing result is not affected by this.
(AntiStain)	Multiple selection	Select the type of stain. The temperature, drum movement and soaking time are all adjusted to suit the type of stain.
i-DOS	■ Activate ■ Deactivate ■ Basic dosage	Briefly press the button to activate or deactivate the intelligent dosing system for fabric softener or liquid detergent . Press the button for approx. three seconds to set the basic dosage. → *"Intelligent dosing system", Page 33*
(Finished in)	Up to 24 hours	Set the programme end. The programme duration is already included in the set number of hours. Once the programme has started, the programme duration is displayed.
(Temperature)	– 90 °C	Adjust the temperature in °C.
(Spin)	- 1400 rpm	Adjust the spin speed or deactivate the spin cycle. If is selected, the water is drained and the spin cycle is deactivated. The laundry stays wet inside the drum.
3 sek. (Child Lock 3 sec.)	■ Activate ■ Deactivate	→ *"Childproof lock", Page 32*

Button	Selection	More information
(Prewash)	■ Activate ■ Deactivate	Activate or deactivate prewash, e.g. for washing heavily soiled laundry. **Note:** If the intelligent dosing system is activated, the detergent will be dispensed automatically for the prewash and the main wash. If the intelligent dosing system is deactivated, place the detergent for the prewash directly in the drum.
(Reduced Ironing)	■ Activate ■ Deactivate	Activate or deactivate the reduced creasing programme. In order to reduce creasing in the laundry, the spin cycle and the spin speed are adapted. The laundry is damp enough after washing that it needs to be hung out on a washing line.

9 Programmes

Note: The laundry's care labels provide you with additional information on programme selection.

Programme	Description	Max. load (kg)
Cotton	Wash hard-wearing items made from cotton, linen or blended fabrics. Also suitable as a short programme for normally soiled laundry when you activate ⏲. Programme setting: ■ Max. 90 °C ■ Max. 1400 rpm	9,0 5,0[1]
Eco 40-60	Wash items made from cotton, linen or blended fabrics. **Note:** Fabrics which can be washed from 40 °C 40 up to 60 °C 60 as per the care symbol can be washed together. The washing performance corresponds to the best possible washing performance class according to the legal requirements. For this programme, the washing temperature is automatically adjusted depending on the load size, in order to achieve the best possible energy efficiency with the best possible washing result. You cannot change the washing temperature. Programme setting: **Note:** The temperature cannot be adjusted in this programme and is set automatically. ■ Max. - °C ■ Max. 1400 rpm	9,0
Easy Care	Wash items made from synthetic or blended fabrics. Programme setting: ■ Max. 60 °C ■ Max. 1200 rpm	4,0
Mix	Wash items made from cotton, linen, or synthetic or blended fabrics. Suitable for lightly soiled laundry. Programme setting: ■ Max. 60 °C	4,0

[1] ⏲ activated
[2] Washing not possible

Programme	Description	Max. load (kg)
	■ Max. 1400 rpm	
Delicate/Silk	Wash delicate, washable items made from silk, viscose and synthetic fabrics. Use a detergent that is suitable for delicates or silk. **Note:** Wash especially delicate items or items with hooks, eyelets or clips in a mesh laundry bag. Programme setting: ■ Max. 40 °C ■ Max. 800 rpm	2,0
Wool/Hand-wash	Hand- or machine-washable items that are made from wool or contain wool. To prevent the laundry from shrinking, the drum moves the items very gently with long pauses. Use a detergent that is suitable for wool. Programme setting: ■ Max. 40 °C ■ Max. 800 rpm	2,0
Rinse	Rinse and then spin the laundry, and drain the water. Programme setting: Max. 1400 rpm	–
Spin/Drain	Spin and drain the water. If you only want to drain the water, activate ∅. The laundry is not spun. Programme setting: Max. 1400 rpm	–
Hygiene Plus	Wash hard-wearing items made from cotton, linen or blended fabrics. Suitable for allergy sufferers and for strict hygiene requirements. **Note:** Once the set temperature has been reached, it remains constant throughout the entire washing process. Programme setting: ■ Max. 60 °C ■ Max. 1400 rpm	6,5
Sport	Wash sports and leisure items made from synthetic fibres, microfibre or fleece. Use a detergent that is suitable for sports items. Do not use fabric softener.	2,0

[1] activated
[2] Washing not possible

Programme	Description	Max. load (kg)
	Tip: Use the Easy Care programme to wash heavily soiled laundry. Programme setting: ■ Max. 40 °C ■ Max. 800 rpm	
Automatic 30°C	Wash delicate items made from cotton, or synthetic or blended fabrics. Gentle laundry care. The degree of soiling and the type of fabric are automatically detected. The washing process is adapted. **Note:** The temperature and spin speed cannot be adjusted in this programme and are set automatically. The maximum temperature is 30 °C. The maximum spin speed is 800 rpm.	3,5
Dark Wash	Wash dark-coloured and colour-intense items made from cotton or easy-care fabric, e.g. jeans. Turn laundry inside-out before washing. Use liquid detergent. Programme setting: ■ Max. 40 °C ■ Max. 1200 rpm	4,0
Drum Clean	Cleaning and caring for the drum. Use this programme in the following cases: ■ Before using the appliance for the first time ■ If you regularly wash at temperatures of 40 °C or lower ■ After a prolonged period of non-use Use washing powder or a detergent that contains bleach. Halve the amount of detergent to avoid foaming. Do not use fabric softener. Do not use liquid detergent or detergent that is intended for woollens or delicates. **Note:** The drum cleaning indicator will flash to remind you if you have not used a programme at 60 °C or higher for a long time.	–[2]

[1] activated
[2] Washing not possible

Programme	Description	Max. load (kg)
Rapid 15'/30'	Wash items made from cotton, or synthetic or blended fabrics. Short programme for small items of lightly soiled laundry. The programme duration is approx. 30 minutes. If you wish to reduce the programme duration to 15 minutes, activate ⏲. The maximum load is reduced to 2,0 kg. Programme setting: ■ Max. 40 °C ■ Max. 1200 rpm	4,0

[1] ⏲ activated
[2] Washing not possible

10 Accessories

Use original accessories. These have been made especially for your appliance.

Note: Some accessories are available in other colours. Contact
→ *"Customer Service", Page 53*.

	Use	Order number
Water inlet hose extension	Extend the water inlet hose for cold water or AquaStop (approx. 2.50 m).	WMZ2381
Fixing brackets	Improves the stability of the appliance.	WMZ2200
Longer water inlet hose	Replace the standard water inlet hose with a longer hose (2.20 m).	00353925
Elbow	Secure the water outlet hose in place.	00655300
Platform	Install the appliance at a raised height so that it can be easily loaded and unloaded.	WMZPW20W

11 Laundry

Note: You can find further information in the digital instruction manual by scanning the QR code in the table of contents or on www.bosch-home.com.

11.1 Preparing the laundry

ATTENTION!
Objects remaining in the laundry may damage the laundry and the drum.

- Remove all items from any pockets in your laundry before using the appliance.
- To protect your appliance and the laundry, prepare the laundry beforehand.
  - Empty any pockets
  - Brush sand out of all collars and pockets
  - Close bed covers and cushion covers
  - Close all zips, Velcro fasteners, hooks and eyes
  - Tie cloth belts, apron strings, etc. together or use a laundry bag.
  - Tie together longer drawstrings, and tie cords with solid end-pieces in hoods or trousers
  - Remove curtain hooks and lead strips or use a mesh laundry bag

- Use a mesh laundry bag for small items of laundry, such as children's socks
- Some stubborn or dried-in stains can be removed by washing several times
- Wash large and small items of laundry together
- Do not rub fresh stains but dab them with soapy water
- Separate items of laundry and shake them out, or observe the programme description

12 Detergents and care products

Notes

- You can find further information in the digital instruction manual by scanning the QR code in the table of contents or on www.bosch-home.com.
- Observe the information on safety → *Page 4* and preventing material damage → *Page 10*.

The manufacturer's instructions for use and dosage can be found on the packaging.

Notes

- Only use liquid detergents that are self-flowing
- Do not mix different liquid detergents
- Do not mix detergent and fabric softener
- Do not use products that have expired or are highly congealed
- Do not use products containing solvents, caustic agents or volatile substances (e.g. bleach)
- Use dyes sparingly as salt may damage stainless steel
- Do not use bleaching agents in the appliance
- Do not pour vinegar into the dispensers → *Page 33* of the intelligent dosing system

13 Basic operation

Note: You can find further information in the digital instruction manual by scanning the QR code in the table of contents or on www.bosch-home.com.

13.1 Switching on the appliance

Requirement: The appliance has been correctly installed and connected.
→ *"Installation and connection", Page 12*

- ▸ Turn the programme selector to a programme.
- ✔ An audible function test is carried out.

13.2 Setting a programme

1. Turn the programme selector and set the required programme.
   → *"Programmes", Page 25*
2. If required, adjust the programme settings → *Page 30*.

13.3 Adjusting the programme settings

Requirement: A programme has been set.
→ *"Setting a programme", Page 30*

- ▸ Adjust the programme settings.
  → *"Buttons", Page 23*

Notes

- The programme settings are not saved permanently for the programme.

- The setting is saved if you activate or deactivate the intelligent dosing system.

13.4 Loading laundry

Note: To prevent creasing, note the maximum load for the programmes.
→ *"Programmes", Page 25*

Requirement: The laundry is prepared.
→ *"Laundry", Page 29*

1. Open the door.

   Ensure that the drum is empty.
2. Place the laundry in the drum.
3. Close the door.

   Ensure that there is no laundry trapped in the door.

13.5 Adding detergent and care product

For programmes in which intelligent dosing is not possible or desirable, you can add detergent manually.

Tip: In addition to intelligent dosing, you can also add additional care product for laundry, e.g. stain remover, starch or bleach, to the manual dosing compartment. Do not add any additional detergent to the manual dosing compartment to avoid overdosage and/or foaming.

Note: Observe the information about detergents and care products
→ *Page 30*.

1. Pull out the detergent drawer.
2. Pour in detergent.
   → *"Detergent drawer", Page 17*
3. If required, add the care product.
4. Push in the detergent drawer.

13.6 Starting the programme

Requirement: A programme has been set.
→ *"Setting a programme", Page 30*

- ▸ Press ▷II.
- ✔ The drum rotates and load detection takes place. This can take up to 2 minutes, after which water enters the drum.
- ✔ The display shows either the programme duration or the "Ready in" time.The display shows either the programme duration or the "Ready in" time.
- ✔ After the programme has ended, the display shows: "End".

13.7 Soaking laundry

Note: No additional detergent is required. The washing solution is then used for washing.

1. Start the programme.
2. To pause the programme, after approx. 10 minutes, press ▷II.
3. To resume the programme, after the desired soaking time, press ▷II .

13.8 Adding laundry

After the programme starts, you can remove or add laundry depending on the programme status.

Requirement: A programme has started.
→ *"Starting the programme", Page 31*

1. Press ▷II.

   The appliance pauses.

   Note: If you want to add laundry, follow the instructions on the display.
   → *"Display", Page 22*
2. Open the appliance door.

3. Add or remove laundry.
4. Close the appliance door.
5. Press ▷II.

13.9 Cancelling the programme

1. Press ▷II.
2. Open the appliance door.
   The appliance door remains locked for safety reasons if the temperature and water levels are high.
   – If the temperature is high, start the **Rinse** programme.
   – If the water level is high, start the **Spin** programme or select a suitable programme for draining. → *"Programmes", Page 25*
3. Remove the laundry → *Page 32*.

13.10 Resuming the programme when the programme status is Rinse Hold

Requirements
- Rinse Stop is activated.
- The last rinse cycle of the set programme has ended and the laundry is in the rinsing water.

1. Set the **Spin** programme or a programme for draining the water. → *"Programmes", Page 25*
2. Press ▷II.

13.11 Unloading the laundry

1. Open the appliance door.
2. Remove the laundry.

13.12 Switching off the appliance

1. Turn the programme selector to ○.
2. Turn off the tap.
3. Wipe the rubber gasket dry and remove any foreign objects.

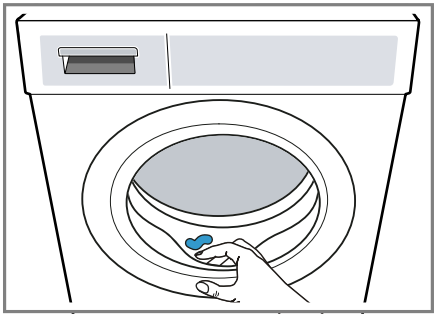

4. Leave the appliance door and detergent drawer open so that residual water can evaporate.

14 Childproof lock

Secure your appliance against being operated unintentionally using the controls.

14.1 Activating the childproof lock

▸ Press and hold the two ⊂⊃ **3 sek.** buttons for approx. 3 seconds.
✔ The display shows ⊂⊃.
✔ The controls are locked.
✔ The childproof lock remains active even after the appliance has been switched off and in the event of a power failure.

14.2 Deactivating the childproof lock

Requirement: To deactivate the childproof lock, the appliance must be switched on.

▸ Press and hold the two ⊂⊃ **3 sek.** buttons for approx. 3 seconds.
✔ ⊂⊃ goes out in the display.

15 Intelligent dosing system

The optimum quantities of liquid detergent and fabric softener are dispensed automatically depending on the programme and settings.

15.1 Starting the programme with intelligent dosing system

If you do not want to dose liquid detergent and fabric softener manually, use the intelligent dosing system. This function is available depending on the selected programme and is activated automatically.

Note
If you are using the intelligent dosing system, do not add additional detergent or fabric softener into the compartment for manual dosing.
→ *"Adding detergent and care product", Page 31*
If you want to dose manually for a set programme, observe the following information:

- Deactivate the intelligent dosing system before starting the programme. The selected settings are retained even after the appliance has been switched off.
  → *"Buttons", Page 23*
- Pour detergent or fabric softener into the compartment for manual dosing.
  → *"Adding detergent and care product", Page 31*
- Activate the intelligent dosing system once the programme has ended.
  → *"Buttons", Page 23*

Requirements

- The laundry is prepared.
  → *"Preparing the laundry", Page 29*
- The laundry is sorted.
- The laundry is placed in the appliance.
  → *"Loading laundry", Page 31*
- The programme is set.
  → *"Setting a programme", Page 30*
- The intelligent dosing system is activated.
  → *"Display", Page 21*
  → *"Display", Page 21*

1. Fill the dispensers → *Page 33*.

   To replace the contents of the dispenser with another product, clean the detergent drawer → *Page 36*.
2. If required, adjust the basic dosage → *Page 34*.
3. If required, adjust the programme settings → *Page 30*.
4. Start the programme → *Page 31*.

✔ After the programme has ended, the display shows: "End".

5. The
   → *"Unloading the laundry", Page 32*.

15.2 Filling the dispensers

If you want to use the intelligent dosing system or if the appliance displays an indication during operation of the appliance, fill the dispensers.

Note: Fill the dispensers only with suitable detergent and care products → *Page 30*.
If you want to add more liquid detergent or fabric softener in the dispenser, use the same product.
If you want to replace the liquid detergent or fabric softener in the dispenser with another product, clean the detergent drawer beforehand.
→ *"Cleaning the detergent drawer", Page 36*

1. Pull out the detergent drawer.
2. Open the dispenser cover.

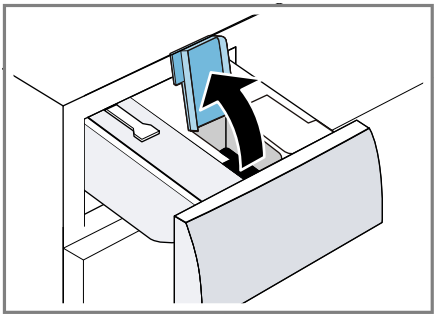

3. Pour liquid detergent ◊ and fabric softener ❀ into the relevant dispensers.
→ *"Detergent drawer", Page 17*

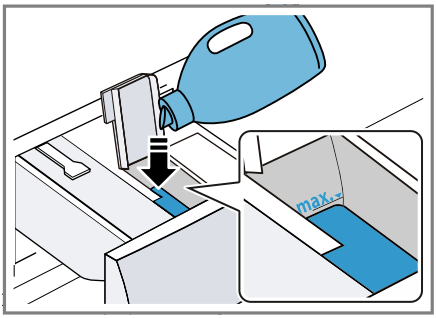

Do not exceed the marking for the maximum filling level when filling.

4. Close the dispenser cover.

Note: To prevent the liquid detergent or fabric softener from drying out, close the dispenser cover immediately after filling.

5. If required, add cleaning aids such as stain remover, water softener or bleach into the compartment for manual dosing.
→ *"Adding detergent and care product", Page 31*
6. Push in the detergent drawer.
7. Adjust the basic dosage
→ *Page 34*.

15.3 Basic dosage

The basic dosage depends on the manufacturer's instructions for the detergent, the water hardness and the degree of soiling of the laundry. Always set a basic dosage that corresponds to the dosage for a standard load of 4.5 kg.

Adjusting the basic dosage

1. Press and hold **i-DOS** for approx. 3 seconds.
✔ The display shows the basic dosage set for ◊.
2. To adjust the basic dosage for ❀, press **i-DOS**.
3. To adjust the setting, press ◷.
4. To end the setting process, wait briefly.

16 Basic settings

You can configure the basic settings for your appliance to meet your needs.

16.1 Overview of the basic settings

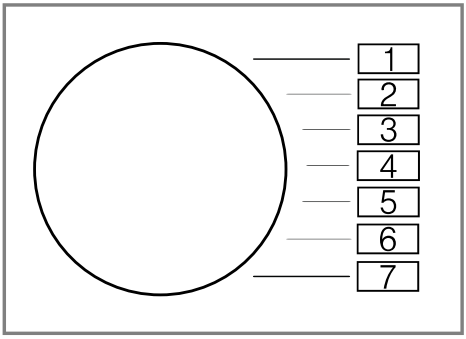

Basic setting	Programme position	Value	Description
End signal	2	0 (off) 1 (quiet) 2 (medium) 3 (loud) 4 (very loud)	Set the volume of the signal at the end of the programme.
Button signal	3	0 (off) 1 (quiet) 2 (medium) 3 (loud) 4 (very loud)	The volume of the audible signal emitted when the buttons are pressed.
Drum cleaning reminder	4	On OFF	Activate or deactivate the reminder to clean the drum.
Programme counter	5	42[1]	Display the number of finished programmes.

[1] Example

16.2 Changing the basic settings

1. Set the programme selector to position 1.

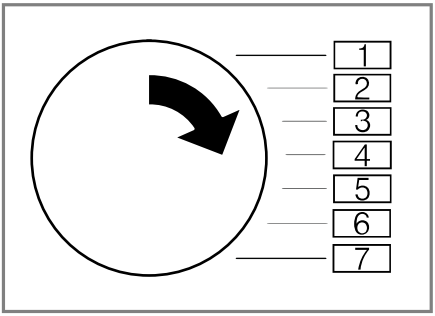

2. Press ⊙ and, at the same time, turn the programme selector to position 2.
✔ The display shows the current value.
3. Set the programme selector to the required position.
→ *"Overview of the basic settings", Page 35*
4. To change the value, press ⏲.
5. To save the changes, switch off the appliance.

17 Cleaning and servicing

To keep your appliance working efficiently for a long time, it is important to clean and maintain it carefully.

Note: You can find further information in the digital instruction manual by scanning the QR code in the table of contents or on www.bosch-home.com.

17.1 Cleaning the drum

⚠ **CAUTION**
Risk of injury!
Permanently washing at low temperatures and a lack of ventilation for the appliance may damage the drum and cause injury.
- Regularly run a programme for cleaning the drum or wash at temperatures of at least 60 °C.
- Leave the appliance to dry after every operation with the door open, and leave the detergent drawer to dry.

- Run the **Drum Clean** programme without laundry and using all-purpose washing powder.

17.2 Cleaning the detergent drawer

If you want to replace the liquid detergent or fabric softener in the dispenser with another product or if the detergent drawer is dirty, clean the detergent dispenser.

ATTENTION!
The pump unit contains electrical components. Electrical components may be damaged if they come into contact with liquids.
- Do not clean the pump unit in the dishwasher and do not immerse it in water.
- Protect the electrical connection on the rear against water, detergent and fabric softener residue.

1. Switch off the appliance.
→ *"Switching off the appliance", Page 32*
2. Pull out the detergent drawer.

3. Press down on the insert and remove the detergent drawer.

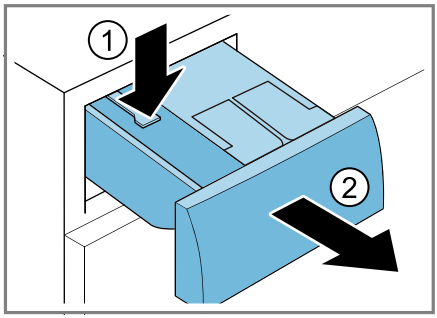

4. Remove the pump unit.

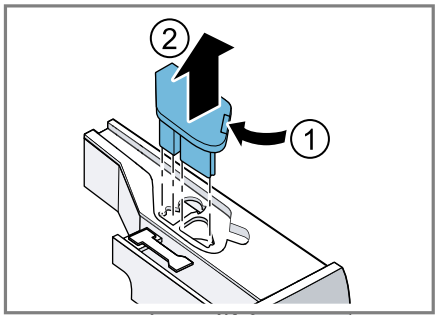

5. Unclip the detergent drawer cover and remove it.

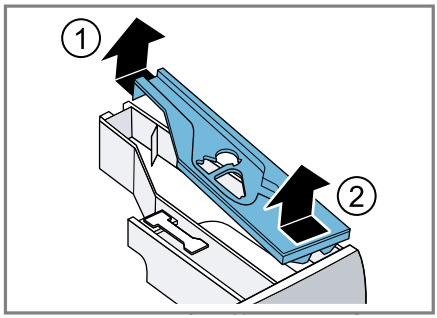

6. Empty the detergent drawer.

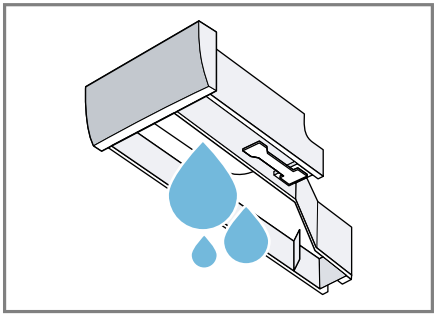

7. Clean the pump unit with a damp cloth.

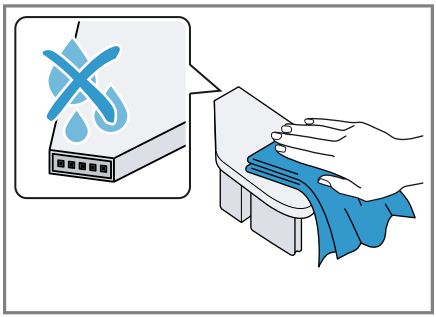

8. Clean the detergent drawer and the cover with a soft, damp cloth or hand shower.

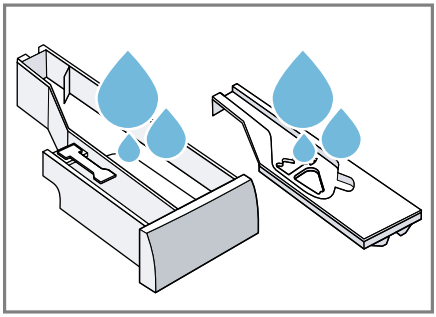

9. Dry the detergent drawer, cover and pump unit and reinsert them.

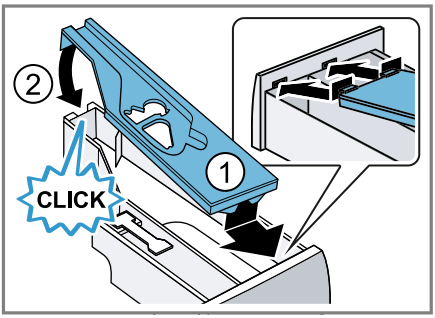

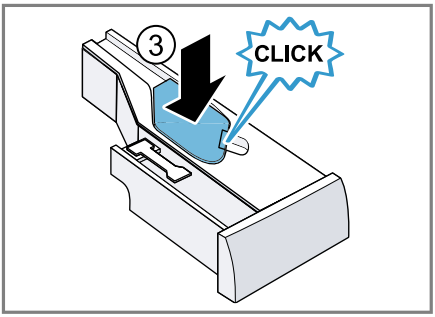

10. Clean the housing of the detergent drawer in the appliance.

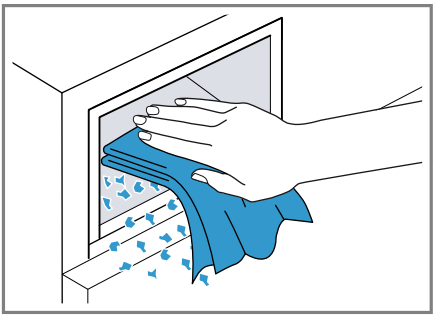

11. Push in the detergent drawer.

17.3 Cleaning the drain pump

Clean the drain pump in the event of faults, e.g. blockages or rattling noises.

Emptying the drain pump

1. Turn off the water tap.
2. Switch off the appliance.
3. Disconnect the appliance's mains plug from the power supply.
4. Open and remove the service flap.

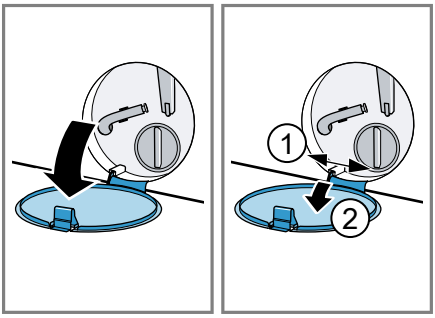

5. Slide a sufficiently large container under the opening.

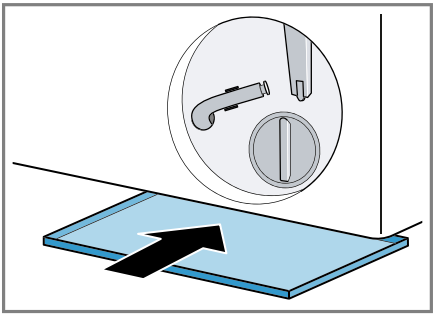

6. Take the drain hose out of the holder.

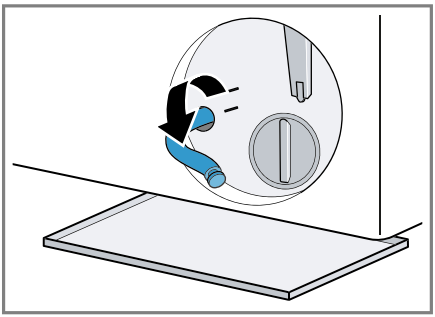

7. ⚠ **CAUTION - Risk of scalding!**
When you wash at high temperatures, the detergent solution gets hot.
- Do not touch the hot detergent solution.

To allow the detergent solution to flow out into the container, remove the sealing cap.

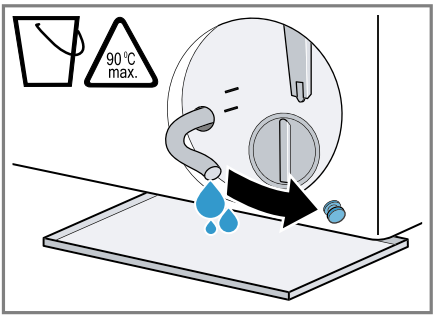

8. Firmly press on the sealing cap.

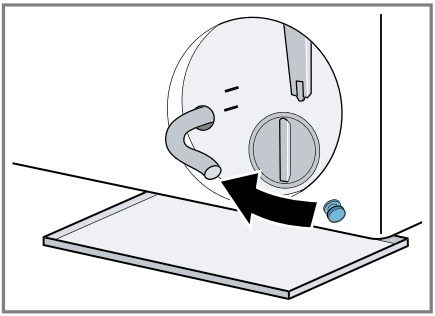

9. Insert the drain hose into the holder.

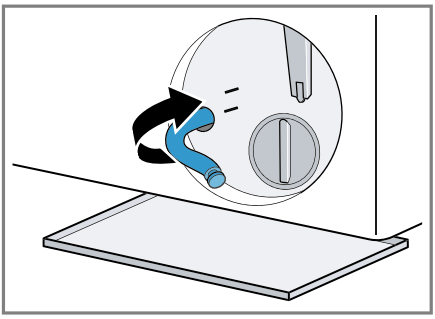

Cleaning the drain pump

Requirement: The drain pump is empty. → *Page 38*

1. Since water may remain in the drain pump, unscrew the pump cap carefully.
   – The filter insert in the pump housing may become stuck due to coarse particles of dirt. Loosen the dirt and remove the filter insert.

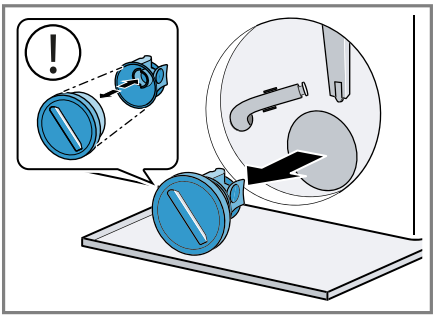

2. Clean the interior, the thread on the pump cap and the pump housing.

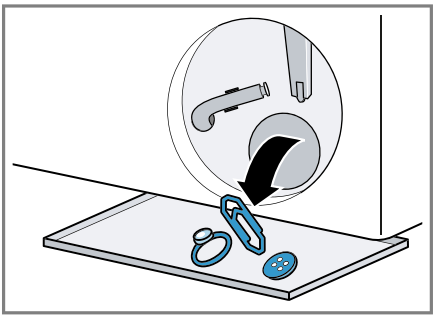

The pump cap is comprised of two parts which can be taken apart for cleaning.

3. Ensure that the impeller in the drain pump can rotate.

4. Insert the pump cap.
   – Ensure that the parts of the pump cap are correctly assembled.

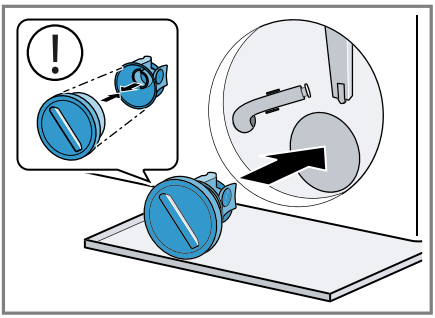

5. Screw the pump cap as far as it will go.

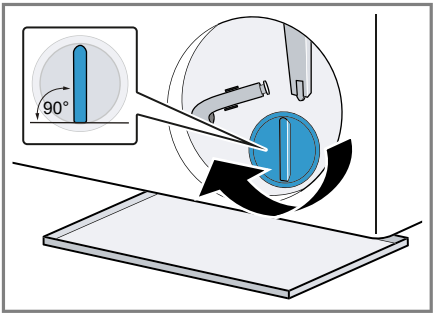

The handle on the pump cap must be in a vertical position.

6. Insert and close the service flap.

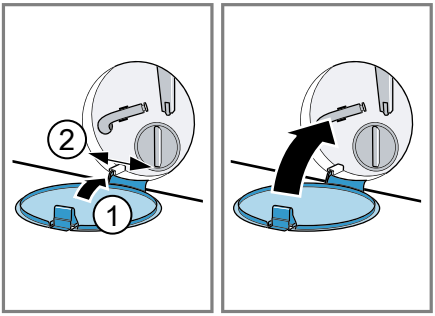

Before the next wash

To prevent unused detergent from flowing straight into the outlet in the next wash, run the **Drain** programme after you have emptied the drain pump.

1. Turn on the water tap.
2. Insert the mains plug.
3. Switch on the appliance.
4. Pour 1 litre of water into the manual dosing compartment.
5. Select a suitable programme for draining.
   → *"Programmes", Page 25*

18 Troubleshooting

You can rectify minor faults on your appliance yourself. Read the troubleshooting information before contacting after-sales service. This will avoid unnecessary costs.

⚠ **WARNING**
Risk of electric shock!
Incorrect repairs are dangerous.
- Repairs to the appliance should only be carried out by trained specialist staff.
- Only use genuine spare parts when repairing the appliance.
- If the power cord of this appliance is damaged, it must be replaced by the manufacturer, the manufacturer's Customer Service or a similarly qualified person in order to prevent any risk.

Fault	Cause and troubleshooting
The display goes out and ▷II flashes.	Energy-saving mode is active ▸ Press any button. ✔ The symbol lights up again.
"E:36 / -10"	Drain pipe or water outlet hose is blocked. ▸ Clean the drain pipe and the water outlet hose.
	Drain pipe or water drain hose is caught or jammed. ▸ Ensure that the drain pipe and water drain hose are not kinked or trapped.
	Drain pump is blocked. ▸ → *"Cleaning the drain pump", Page 38*
	The water outlet hose is connected too high. ▸ Install the water outlet hose at a maximum height of 1 metre.
	Pump cover is not correctly assembled. ▸ Correctly assemble the pump cover.
	Detergent dosage is too high. ▸ Immediate measure: Mix one tablespoon of fabric softener with 0.5 litres of water and pour the mixture into the compartment for manual dosing (not for outdoor clothing, sportswear or items stuffed with down). ▸ If intelligent dosing is activated, reduce the basic dosage → *Page 34*. ▸ If you dose manually, reduce the amount of detergent for the next washing cycle with the same load.

Fault	Cause and troubleshooting
"E:36 / -10"	Unapproved extension installed on the water drain hose. ▸ Remove any unapproved extensions from the water hose. → *"Connecting the appliance", Page 14*
	The pump cap is not fully screwed in. ▸ Ensure that the pump cap is screwed in all the way into the appliance. The handle on the pump cap must be in a vertical position.
"E:10 / -00 / -10 / -20"	The pump for the intelligent dosing system is blocked. **1.** Switch off the appliance. **2.** Clean the pump unit. → *"Cleaning the detergent drawer", Page 36* **3.** Switch the appliance on. **4.** If the display appears again after you clean the pump unit, call customer service. → *"Customer Service", Page 53* **Note:** You can deactivate and manually dose the intelligent dosing system until the fault is rectified. → *"Buttons", Page 23*
"E:60 / -2B"	The unbalanced load detection system has interrupted the spin cycle because the laundry is unevenly distributed. ▸ Redistribute the laundry in the drum. **Note:** Where possible, mix large and small items in the drum. Different sized items of laundry distribute themselves better during the spin cycle.
"E:30 / -10" and/or 🚰	The water pressure is low. No remedial action possible.
	The filters in the water inflow are blocked. ▸ Clean the filters in the water inflow.
	The tap is turned off. ▸ Turn on the tap.
	The water inlet hose is kinked or jammed. ▸ Ensure that the water inlet hose is not kinked or jammed.
	Water level measurement system is defective. **Note:** With the error message, the appliance starts a draining process.

Fault	Cause and troubleshooting
"E:30 / -10" and/or	1. First wait approx. 5 minutes until the drain process ends. 2. To reset the error message, switch the appliance off. 3. Switch the appliance back on. 4. If the error message is displayed again, call customer service. → *"Customer Service", Page 53*
	The detergent drawer has not been pushed in fully. ▸ Push in the detergent drawer until the symbol goes out.
	The pump unit is not inserted. 1. Insert the pump unit into the detergent drawer. → *"Cleaning the detergent drawer", Page 36* 2. Push in the detergent drawer until the symbol goes out.
lights up.	The temperature is too high. ▸ Wait until the temperature has dropped. ▸ → *"Cancelling the programme", Page 32*
	Water level is too high. ▸ Select a suitable programme for draining. → *"Programmes", Page 25*
flashes.	Door is not closed. 1. Close the door. 2. Press to start the programme.
	Laundry is caught in the door. 1. Open the door again. 2. Remove any trapped laundry. 3. Close the door. 4. Press to start the programme.
All other error codes.	Malfunction ▸ Call the after-sales service. → *"Customer Service", Page 53*
"E:30/-20"	Solenoid valve defective. ▸ Call the after-sales service. → *"Customer Service", Page 53*
	Detergent dosage is too high. ▸ If you dose manually, reduce the amount of detergent for the next washing cycle with the same load.
	Additional water is added.

Fault	Cause and troubleshooting
"E:30/-20"	▸ Do not add any extra water to the appliance while it is operating.
The appliance is not working.	The mains plug of the power cord is not plugged in. ▸ Connect the appliance to the power supply.
	The circuit breaker in the fuse box has tripped. ▸ Check the circuit breaker in the fuse box.
	There has been a power cut. ▸ Check whether the lighting in your kitchen or other appliances are working.
The programme does not start.	You have not pressed ▷II. ▸ Press ▷II.
	Door is not closed. 1. Close the door. 2. Press ▷II to start the programme.
	Childproof lock is activated. ▸ → *"Deactivating the childproof lock", Page 32*
	⏲ is activated. ▸ Check whether ⏲ is activated. → *"Buttons", Page 23*
	Laundry is caught in the door. 1. Open the door again. 2. Remove any trapped laundry. 3. Close the door. 4. Press ▷II to start the programme.
	The detergent drawer has not been pushed in fully. ▸ Push in the detergent drawer until the symbol goes out.
	The pump for the intelligent dosing system is blocked. 1. Switch off the appliance. 2. Clean the pump unit. → *"Cleaning the detergent drawer", Page 36* 3. Switch the appliance on. 4. If the display appears again after you clean the pump unit, call customer service. → *"Customer Service", Page 53* **Note:** You can deactivate and manually dose the intelligent dosing system until the fault is rectified. → *"Buttons", Page 23*
	The detergent drawer has not been pushed in fully.

Fault	Cause and troubleshooting
The programme does not start.	▸ Push in the detergent drawer until the symbol goes out.
The door cannot be opened.	The temperature is too high. ▸ Wait until the temperature has dropped. ▸ → *"Cancelling the programme", Page 32*
	Water level is too high. ▸ Select a suitable programme for draining. → *"Programmes", Page 25*
	Power failure. ▸ Open the door using the emergency release. → *"Emergency release", Page 52*
The water is not draining.	Drain pipe or water outlet hose is blocked. ▸ Clean the drain pipe and the water outlet hose.
	Drain pipe or water drain hose is caught or jammed. ▸ Ensure that the drain pipe and water drain hose are not kinked or trapped.
	Drain pump is blocked. ▸ → *"Cleaning the drain pump", Page 38*
	The water outlet hose is connected too high. ▸ Install the water outlet hose at a maximum height of 1 metre.
	Pump cover is not correctly assembled. ▸ Correctly assemble the pump cover.
	Detergent dosage is too high. ▸ Immediate measure: Mix one tablespoon of fabric softener with 0.5 litres of water and pour the mixture into the compartment for manual dosing (not for outdoor clothing, sportswear or items stuffed with down). ▸ If intelligent dosing is activated, reduce the basic dosage → *Page 34*. ▸ If you dose manually, reduce the amount of detergent for the next washing cycle with the same load.
	Unapproved extension installed on the water drain hose. ▸ Remove any unapproved extensions from the water hose. → *"Connecting the appliance", Page 14*
	The pump cap is not fully screwed in.

Fault	Cause and troubleshooting
The water is not draining.	▸ Ensure that the pump cap is screwed in all the way into the appliance. The handle on the pump cap must be in a vertical position.
Water is not flowing in. Detergent is not being dispensed.	You have not pressed ▷II. ▸ Press ▷II.
	The filters in the water inflow are blocked. ▸ Clean the filters in the water inflow.
	The tap is turned off. ▸ Turn on the tap.
	The water inlet hose is kinked or jammed. ▸ Ensure that the water inlet hose is not kinked or jammed.
The spin cycle runs several times.	The unbalanced load detection system eliminates an imbalance by repeatedly redistributing the laundry. ▸ Not a fault – no action required. **Note:** When loading, where possible, place large and small items of laundry together in the drum. Different sized items of laundry distribute themselves better during the spin cycle.
The programme duration changes during the wash cycle.	The programme operation is optimised electronically. This may change the programme duration. ▸ Not a fault – no action required.
	The unbalanced load detection system eliminates an imbalance by repeatedly redistributing the laundry. ▸ Not a fault – no action required. **Note:** When loading, where possible, place large and small items of laundry together in the drum. Different sized items of laundry distribute themselves better during the spin cycle.
	Foam detection system switches on a rinse cycle if foam build-up is too high. ▸ Not a fault – no action required.
No water is visible in the drum.	Water is below the visible area. ▸ Not a fault – no action required. ▸ Do not add any extra water to the appliance while it is operating.
Drum jerks after the programme starts.	This is caused by an internal motor test. ▸ Not a fault – no action required.

Fault	Cause and troubleshooting
Vibrations and movement of the appliance whilst spinning.	Appliance is not correctly aligned. ▸ → *"Aligning the appliance", Page 15*
	The appliance feet are not fixed. ▸ Secure the appliance feet. → *"Aligning the appliance", Page 15*
	Transit bolts have not been removed. ▸ → *"Removing the transit bolts", Page 13*.
Drum rotates, water does not flow in.	Load detection is active. ▸ Not a fault – no action required. **Note:** The load detection can take up to two minutes.
Heavy foam build-up	Detergent dosage is too high. ▸ Immediate measure: Mix one tablespoon of fabric softener with 0.5 litres of water and pour the mixture into the compartment for manual dosing (not for outdoor clothing, sportswear or items stuffed with down). ▸ If intelligent dosing is activated, reduce the basic dosage → *Page 34*. ▸ If you dose manually, reduce the amount of detergent for the next washing cycle with the same load.
i-DOS cannot be actuated.	Intelligent dosing is not intended for this programme. ▸ Not a fault – no action required. → *"Starting the programme with intelligent dosing system", Page 33*
	Programme progress does not allow intelligent dosing. No remedial action possible.
High spin speed not reached.	A low spin speed is selected. ▸ The next time you run a wash cycle, set a higher spin speed.
	is activated. ▸ Select the programmes that are suitable for the type of fabric.
	Unbalance load detection system is using a reduced spin speed to eliminate an unbalance. ▸ Redistribute the laundry in the drum. **Note:** Where possible, mix large and small items in the drum. Different sized items of laundry distribute themselves better during the spin cycle. ▸ Start the **Spin** programme.

Fault	Cause and troubleshooting
The spin programme does not start.	Drain pipe or water outlet hose is blocked. ▸ Clean the drain pipe and the water outlet hose.
	Drain pipe or water drain hose is caught or jammed. ▸ Ensure that the drain pipe and water drain hose are not kinked or trapped.
	The unbalanced load detection system has interrupted the spin cycle because the laundry is unevenly distributed. ▸ Redistribute the laundry in the drum. **Note:** Where possible, mix large and small items in the drum. Different sized items of laundry distribute themselves better during the spin cycle. ▸ Start the **Spin** programme.
Rushing, hissing noise.	Water is flushed under pressure into the detergent drawer. ▸ Not a fault – normal operating noise.
Longer, whirring noise before the start of the wash cycle or fabric softening.	Intelligent dosing system dispenses detergent or care products. ▸ Not a fault – normal operating noise.
Brief whirring noise after switching on the appliance.	Intelligent dosing system carries out a function test. ▸ Not a fault – normal operating noise.
Loud noises during the spin cycle.	Appliance is not correctly aligned. ▸ → *"Aligning the appliance", Page 15*
	The appliance feet are not fixed. ▸ Secure the appliance feet. → *"Aligning the appliance", Page 15*
	Transit bolts have not been removed. ▸ → *"Removing the transit bolts", Page 13*.
Banging noises, rattling in the drain pump.	Foreign bodies have got into the drain pump. ▸ → *"Cleaning the drain pump", Page 38*
Slurping, rhythmical suction noise.	The drain pump is active, the detergent solution is pumped out. ▸ Not a fault – normal operating noise.
Creasing.	The spin speed is too high. ▸ The next time you run a wash cycle, set a lower spin speed.
	The load is too large.

Fault	Cause and troubleshooting
Creasing.	▸ The next time you run a wash cycle, reduce the amount of laundry being loaded.
	Unsuitable programme for the type of fabric. ▸ Select the programmes that are suitable for the type of fabric.
The spin result is not satisfactory. The laundry is too wet/too damp.	A low spin speed is selected. ▸ The next time you run a wash cycle, set a higher spin speed. ▸ Start the **Spin** programme.
	is activated. ▸ Select the programmes that are suitable for the type of fabric.
	Drain pipe or water outlet hose is blocked. ▸ Clean the drain pipe and the water outlet hose.
	Drain pipe or water drain hose is caught or jammed. ▸ Ensure that the drain pipe and water drain hose are not kinked or trapped.
	The unbalanced load detection system has interrupted the spin cycle because the laundry is unevenly distributed. ▸ Redistribute the laundry in the drum. **Note:** Where possible, mix large and small items in the drum. Different sized items of laundry distribute themselves better during the spin cycle. ▸ Start the **Spin** programme.
	Unbalance load detection system is using a reduced spin speed to eliminate an unbalance. ▸ Redistribute the laundry in the drum. **Note:** Where possible, mix large and small items in the drum. Different sized items of laundry distribute themselves better during the spin cycle. ▸ Start the **Spin** programme.
Detergent residue on the damp washing.	Detergents may contain water-insoluble substances that deposit on the laundry. ▸ Start the **Rinse** programme.
	Unsuitable detergent added to the dispenser of the intelligent dosing system. 1. Check whether the detergent used is suitable. → *"Detergents and care products", Page 30*

Fault	Cause and troubleshooting
Detergent residue on the damp washing.	2. Drain the dispenser. → *"Cleaning the detergent drawer", Page 36* 3. Clean the dispenser. 4. Refill the dispenser. → *"Filling the dispensers", Page 33*
	Basic dosage is not correctly adjusted. ▸ If intelligent dosing is activated, reduce the basic dosage → *Page 34*.
Detergent residue on the dry laundry.	Detergents may contain water-insoluble substances that deposit on the laundry. ▸ Brush out the laundry after washing and drying.
	Unsuitable detergent added to the dispenser of the intelligent dosing system. 1. Check whether the detergent used is suitable. → *"Detergents and care products", Page 30* 2. Drain the dispenser. → *"Cleaning the detergent drawer", Page 36* 3. Clean the dispenser. 4. Refill the dispenser. → *"Filling the dispensers", Page 33*
	Basic dosage is not correctly adjusted. ▸ If intelligent dosing is activated, reduce the basic dosage → *Page 34*.
Insufficient cleaning.	Basic dosage not adjusted. ▸ If intelligent dosing is activated, adjust the basic dosage → *Page 34*.
	Detergent or care products have congealed in dispensers of the intelligent dosing system. 1. Check whether the detergent used is suitable. → *"Detergents and care products", Page 30* 2. Drain the dispenser. → *"Cleaning the detergent drawer", Page 36* 3. Clean the dispenser. 4. Refill the dispenser. → *"Filling the dispensers", Page 33*
	Unsuitable detergent added to the dispenser of the intelligent dosing system. 1. Check whether the detergent used is suitable. → *"Detergents and care products", Page 30* 2. Drain the dispenser. → *"Cleaning the detergent drawer", Page 36*

Fault	Cause and troubleshooting
Insufficient cleaning.	**3.** Clean the dispenser. **4.** Refill the dispenser. → *"Filling the dispensers", Page 33*
Water is leaking out at the water inlet hose.	Water inlet hose is not correctly/securely connected. **1.** Connect the water supply hose correctly. → *"Connecting the water inlet hose", Page 14* **2.** Tighten the screw connection.
Water is leaking out at the water outlet hose.	The water outlet hose is damaged. ▸ Replace the damaged water outlet hose.
	Water outlet hose is not connected correctly. ▸ Connect the water outlet hose correctly. → *"Water outlet connection types", Page 15*
Odours have formed in the appliance.	Humidity and detergent residue may promote the formation of bacteria. ▸ → *"Cleaning the drum", Page 36* ▸ If you are not using the appliance, leave the door and detergent drawer open so that residual water can evaporate.

18.1 Emergency release

Releasing the door

Requirement: The drain pump is empty. → *Page 38*

1. **ATTENTION!** Escaping water may cause material damage.
   - Do not open the door if you can see water through the glass.

   Pull the emergency release downwards with a tool and release.

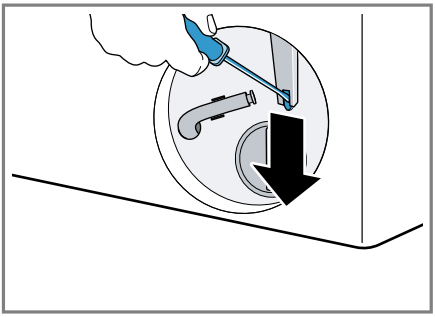

✔ The door lock is released.

2. Insert the maintenance flap and lock it into place.
3. Close the maintenance flap.

19 Transportation, storage and disposal

19.1 Removing the appliance

Note: You can find further information in the digital instruction manual by scanning the QR code in the table of contents or on www.bosch-home.com.

1. Turn off the tap.
2. Empty the water inlet hose.
3. Switch off the appliance.
4. Unplug the appliance's mains plug.
5. Drain the water.
   → *"Cleaning the drain pump", Page 38*
6. Detach the hoses.
7. Empty the dispensers.

19.2 Inserting the transit bolts

Secure the appliance for transportation using transit bolts in order to prevent damage.

1. Use a screwdriver to remove the 4 cover caps.

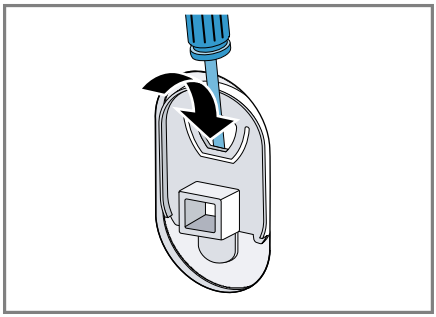

   Keep the cover caps.
2. Install the 4 transit bolts. Refer to the description
   → *"Removing the transit bolts", Page 13* for this and proceed in reverse order.

19.3 Using the appliance again

- For further information, see
  → *"Installation and connection", Page 12* and
  → *"Starting an empty washing cycle", Page 19*.

19.4 Disposing of old appliance

Valuable raw materials can be re-used by recycling.

⚠ **WARNING**
Risk of harm to health!
Children can lock themselves in the appliance, thereby putting their lives at risk.

- ▸ Do not install the appliance behind a door as this may obstruct the appliance door or prevent it from opening.
- ▸ With redundant appliances, unplug the power cord. Then cut through the cord and damage the lock on the appliance door beyond repair so that the appliance door will no longer close.

1. Unplug the appliance from the mains.
2. Cut through the power cord.
3. Dispose of the appliance in an environmentally friendly manner.

   Information about current disposal methods are available from your specialist dealer or local authority.

This appliance is labelled in accordance with European Directive 2012/19/EU concerning used electrical and electronic appliances (waste electrical and electronic equipment - WEEE). The guideline determines the framework for the return and recycling of used appliances as applicable throughout the EU.

20 Customer Service

Function-relevant genuine spare parts according to the corresponding Ecodesign Order can be obtained from Customer Service for a period of at least 10 years from the date on which your appliance was placed on the market within the European Economic Area.

Note: Under the terms of the manufacturer's warranty the use of Customer Service is free of charge.

Detailed information on the warranty period and terms of warranty in your country is available from our after-sales service, your retailer or on our website.
If you contact Customer Service, you will require the product number (E-Nr.) and the production number (FD) of your appliance.
The contact details for Customer Service can be found in the enclosed Customer Service directory or on our website.

20.1 Product number (E-Nr.) and production number (FD)

You can find the product number (E-Nr.) and the production number (FD) on the appliance's rating plate. Depending on the model, the rating plate is located:

- On the inside of the door.
- On the inside of the maintenance flap.
- On the rear of the appliance.

Make a note of your appliance's details and the Customer Service telephone number to find them again quickly.

21 Consumption values

The following information is provided in accordance with the EU Ecodesign Regulation. The values given for programs other than the **Eco 40-60** are indicative only and were determined in accordance with the applicable standard EN60456. The automatic dosing function has been deactivated for this purpose.
Note on the comparison test: Deactivate the automatic dosing function unless this function is the object of the test.

Programme	Load (kg)	Programme duration (h:min)[1]	Energy consumption (kWh/cycle)[1]	Water consumption (l/cycle)[1]	Maximum temperature (°C) 5 mins[1]	Spin speed (rpm)[1]	Residual moisture (%)[1]
Eco 40-60[2]	9,0	3:48	0,870	75,0	38	1351	50,00
Eco 40-60[2]	4,5	2:54	0,370	40,0	27	1351	49,00
Eco 40-60[2]	2,5	2:22	0,180	30,0	23	1351	52,00
Cotton 20 °C	9,0	3:44	0,400	98,0	23	1400	50,00
Cotton 40 °C	9,0	3:44	1,290	98,0	44	1400	50,00
Cotton 60 °C	9,0	3:44	1,750	98,0	60	1400	50,00
Cotton 40 °C +	9,0	4:14	1,330	110,0	44	1400	50,00
Easy Care 40 °C	4,0	2:37	0,800	61,0	44	1200	30,00
Mix 40 °C	4,0	1:05	0,640	44,0	42	1400	53,00
Wool/ Hand-wash 30 °C	2,0	0:41	0,300	48,0	29	800	26,00

[1] Due to the influence of water pressure, hardness and inlet temperature, ambient temperature, type, amount and soiling of laundry, detergent used, fluctuations in the power supply and the selected additional functions, the actual values may deviate from the stated values.
[2] Test programme in accordance with the EU Ecodesign Directive and the EU Energy Labelling Regulation with cold water (15 °C).

22 Technical data

Appliance height	84,8 cm
Appliance width	59,8 cm
Appliance depth	59,0 cm
Appliance depth with door closed	63,6 cm
Appliance depth with door open	107.3 cm

Weight	74,5 kg
Maximum load	9,0 kg
Mains voltage	220-240 V, 50-60 Hz
⊟ Minimum installation protection	10A
Nominal power	2300 W
Power consumption	■ Off mode: 0,15 W ■ Left-on mode: 0,50 W
Water pressure	■ Minimum: 100 kPa (1 bar) ■ Maximum: 1000 kPa (10 bar)
Length of the water inlet hose	150 cm
Length of the water outlet hose	150 cm
Length of the power cord	210 cm

You can find more information about your model online at https://eprel.ec.europa.eu/[1]. This web address is linked to the official EU EPREL product database. Please then follow the instructions on searching for the model. The model identifier is made up of the characters before the slash in the product number (E-Nr.) on the rating plate. Alternatively, you can also find the model identifier in the first line of the EU energy label.

[1] Only applies to countries in the European Economic Area

Thank you for buying a Bosch Home Appliance!

Register your new device on MyBosch now and profit directly from:

- **Expert tips & tricks for your appliance**
- **Warranty extension options**
- **Discounts for accessories & spare-parts**
- **Digital manual and all appliance data at hand**
- **Easy access to Bosch Home Appliances Service**

Free and easy registration – also on mobile phones:
www.bosch-home.com/welcome

Looking for help? You'll find it here.

Expert advice for your Bosch home appliances, help with problems or a repair from Bosch experts.
Find out everything about the many ways Bosch can support you:
www.bosch-home.com/service
Contact data of all countries are listed in the attached service directory.

BSH Hausgeräte GmbH
Carl-Wery-Straße 34
81739 München, GERMANY
www.bosch-home.com

A Bosch Company

9001639387 (020422)
en

Valid within Great Britain:
Imported to Great Britain by
BSH Home Appliances Ltd.
Grand Union House
Old Wolverton Road
Wolverton, Milton Keynes
MK12 5PT
United Kingdom