BOSCH

**Register** your appliance and join the Bosch family of perks: **bosch-home.com/us/mybosch**

MyBosch

# Dishwasher

**SHX9PCL5N**

**[en-us]** Use and Care Manual

## Further information and explanations are available online:

## Table of contents


**1 IMPORTANT SAFETY INSTRUCTIONS ..... 4**
1.1 Safety definitions ..... 4
1.2 General information ..... 4
1.3 Intended use ..... 4
1.4 Restrictive Use ..... 4
1.5 Grounding instructions ..... 4
1.6 Safe use ..... 4
1.7 Risk to children ..... 5
1.8 State of California Proposition 65 Warnings ..... 5

**2 Preventing material damage ..... 6**

**3 Environmental protection and energy-saving ..... 6**
3.1 Saving energy ..... 6
3.2 Zeolith drying Ⓩ ..... 6
3.3 AquaSensor ..... 6
3.4 Sensors ..... 6

**4 Familiarizing yourself with your appliance ..... 7**
4.1 Appliance ..... 7
4.2 Controls ..... 8

**5 Dishwasher Cycles ..... 10**
5.1 Energy Guide ..... 10
5.2 Favorite ☆ ..... 11

**6 Options ..... 11**

**7 Features ..... 12**
7.1 Upper rack ..... 12
7.2 Lower rack ..... 13
7.3 Silverware Basket ..... 13
7.4 Smart Load 3rd rack ..... 13
7.5 Cup shelf ..... 14
7.6 Flip tines ..... 14
7.7 Rack heights ..... 14

**8 Before using for the first time ..... 15**
8.1 Initial use ..... 15

**9 Water softening system ..... 15**
9.1 Overview of water hardness settings ..... 15
9.2 Setting the water softening system ..... 15
9.3 Special Dishwasher Salt ..... 15
9.4 Switching off the water softening system ..... 16

**10 Rinse aid system ..... 16**
10.1 Rinse aid ..... 16
10.2 Setting the amount of rinse aid ..... 16
10.3 Switching the rinse aid system off ..... 17

**11 Detergent ..... 17**
11.1 The correct detergents ..... 17
11.2 Incompatible detergents ..... 17
11.3 Information on Detergent ..... 17
11.4 Adding Detergent ..... 17
11.5 Detergent table ..... 18

**12 Dishware ..... 18**
12.1 Damage to glass and dishware ..... 18
12.2 Loading dishware ..... 19
12.3 Removing dishware ..... 19
12.4 Loading patterns ..... 19

**13 Basic Operation ..... 20**
13.1 Protection against unintentional operation ..... 20
13.2 Switching on the appliance ..... 21
13.3 Setting a cycle ..... 21
13.4 Setting options ..... 21
13.5 Setting the time delay ..... 21
13.6 Starting the wash cycle ..... 21
13.7 Interrupting the wash cycle ..... 21
13.8 Terminating the wash cycle ..... 21
13.9 Switching off the appliance ..... 21

**14 Basic settings ..... 22**
14.1 Overview of the basic settings ..... 22
14.2 Changing the basic settings ..... 23

**15 Home Connect® ..... 23**
15.1 Home Connect® quick start ..... 24
15.2 Home Connect® settings ..... 24
15.3 Remote Start ..... 24
15.4 Remote Diagnostics ..... 24
15.5 Software update ..... 24
15.6 Data Protection ..... 24

**16 Cleaning and maintenance ..... 25**
16.1 Cleaning the tub ..... 25
16.2 Cleaning agent ..... 25
16.3 Tips on appliance care ..... 25
16.4 Filter system ..... 25
16.5 Cleaning spray arms ..... 26

**17 Troubleshooting ..... 28**

**18 Transportation, storage and disposal ..... 37**
18.1 Removing the appliance ..... 37
18.2 Vacation and Storage ..... 37
18.3 Transporting the appliance ..... 37
18.4 Disposal of your old appliance ..... 37

**19 Customer Service ..... 38**
19.1 Model number (E-Nr.), production number (FD) and consecutive numbering (Z-Nr.) ..... 38

**20 Technical specifications..... 39**
20.1 Information regarding Free and Open Source Software..... 39

**21 STATEMENT OF LIMITED PRODUCT WARRANTY..... 39**
21.1 What this warranty covers & Who it applies to..... 39
21.2 How long the warranty lasts ..... 39
21.3 Extended Warranty ..... 39
21.4 Repair/replace as your exclusive remedy..... 40
21.5 Out of warranty product..... 40
21.6 Warranty exclusions..... 40
21.7 Obtaining warranty service..... 41
21.8 Product information..... 41

# IMPORTANT SAFETY INSTRUCTIONS
# READ AND SAVE THESE INSTRUCTIONS

Read all instructions carefully before use. These precautions will reduce the risk of electrical shock, fire and injury to persons. When using kitchen appliances, basic safety precautions must be followed including those in the following pages.

## 1.1 Safety definitions

Here you can find explanations of the safety signal words used in this manual.

**WARNING**
This indicates that death or serious injuries may occur as a result of non-observance of this warning.

**CAUTION**
This indicates that minor or moderate injuries may occur as a result of non-observance of this warning.

***NOTICE:***
This indicates that damage to the appliance or property may occur as a result of non-compliance with this advisory.

**Note:** This alerts you to important information and/or tips.

## 1.2 General information

To reduce the risk of fire, electrical shock, or serious injury, observe the following.

- Read and understand all instructions before using the appliance.
- Keep the provided documents in a safe place for future reference or for the next owner.
- Do not connect the appliance if it has been damaged in transit.
- Severe product damage and/or injury could result from the use of unqualified service technicians or non-original parts. All repairs must be performed by an authorized service provider using only original equipment factory replacement parts.
- NSF/ANSI 184 Certified residential dishwashers are not intended for licensed food establishments.

## 1.3 Intended use

Only use this appliance:

- for cleaning household dishware.
- For normal household use and in enclosed spaces in a residential environment.
- Up to an altitude of 8200 ft (2500 m) above sea level.

## 1.4 Restrictive Use

This appliance is not intended for use by persons (including children) with reduced physical, sensory or mental capabilities, or lack of experience and knowledge, unless they have been given supervision or instruction concerning use of the appliance by a person responsible for their safety.

## 1.5 Grounding instructions

This appliance must be grounded to a metal, permanent wiring system or an equipment grounding conductor must be run with the circuit conductors and connected to the equipment grounding terminal or lead on the dishwasher. See the Installation Instructions included with this dishwasher for more information on electrical requirements.

**WARNING**
Improper connection of the equipment grounding conductor can result in risk of electric shock.

- ▶ This appliance must be grounded. In the event of a malfunction or breakdown, grounding will reduce the risk of electric shock by providing a path of least resistance for electric current. This appliance is equipped with a cord having an equipment-grounding conductor. Check with a qualified electrician or authorized service representative if you are in doubt whether the appliance is properly grounded.

## 1.6 Safe use

Follow these safety instructions when using the appliance.

**WARNING**
To reduce the risk of serious injury, observe the following.

- ▶ Read all instructions before using this dishwasher.
- ▶ Use this dishwasher only for its intended function, which is the washing of household dishware and kitchenware rated as dishwasher safe.
- ▶ Only use detergents or rinsing agents recommended for use in a dishwasher, and keep them out of the reach of children.
- ▶ Do not abuse, sit or stand on the door or dish racks of the dishwasher.

# IMPORTANT SAFETY INSTRUCTIONS
READ AND SAVE THESE INSTRUCTIONS

**WARNING**
Under certain conditions, hydrogen gas may be produced in a hot water system that has not been used for two weeks or more. Hydrogen gas is explosive.

- Before using a dishwasher that is connected to a hot water system that has been unused for two weeks or longer, turn on all hot water faucets and let the water flow from each for several minutes. This will release any accumulated hydrogen gas. As the gas is explosive, do not smoke or use an open flame during this time.

**WARNING**
To avoid risk of electric shock, observe the following.

- Only use the appliance in enclosed residential space according to the installation manual.
- Never expose the appliance to intense heat or humidity.
- Do not use any steam cleaners or high-pressure cleaners to clean this appliance. If not followed, excess moisture can accumulate.

**WARNING**
The blow opening of the Zeolith container becomes hot and can cause burns.

- Never touch the blow opening of the Zeolith container.

**WARNING**
To avoid risk of injury, when loading items to be washed, observe the following.

- Locate sharp items so they are not likely to damage the door seal.
- Load knives and other sharp utensils with their handles up to reduce the risk of cut-type injuries.
- Do not wash plastic items unless they are marked "dishwasher safe" or the equivalent. For plastic items not so marked, check the manufacturer's recommendations.
- Do not operate your dishwasher unless all enclosure panels are in place.
- Do not tamper with or override controls and interlocks.

**WARNING**
For safe care and operation of your appliance, observe the following.

- Follow the safety instructions and directions for use on the detergent and rinse aid product labels.
- Do not use harsh chemicals such as bleach-based products to clean your dishwasher. Some bleach-based products can damage your dishwasher and may present health hazards!
- Always use caution when opening the door during or following a wash cycle as hot water or steam may escape. Do not fully open the door until water noises have stopped and steam has subsided.
- To avoid floor damage and possible mold growth, do not allow wet areas to remain around or under the dishwasher.

***NOTICE:***
Water and power shut off

- It is highly recommended for the end user to become familiar with the procedure to shut off the incoming water supply and the procedure to shut off the incoming power supply. See the installation instructions or contact your installer for more information.

## 1.7 Risk to children

Follow these safety instructions if there are children in your home.

**WARNING**
To reduce risk of injury to children, observe the following.

- Do not allow children to play in or on the dishwasher.
- When children become old enough to operate the appliance, it is the responsibility of the parents/legal guardians to ensure the children are instructed in safe practices by qualified persons.
- Remove the dishwasher door to the washing compartment when removing an old dishwasher for service or discarding.

## 1.8 State of California Proposition 65 Warnings

This product may contain a chemical known to the State of California, which can cause cancer or reproductive harm. Therefore, the packaging of your product may bear the following label as required by California:

**STATE OF CALIFORNIA PROPOSITION 65 WARNING:**

**WARNING**
Cancer and Reproductive Harm - **www.P65Warnings.ca.gov**

# 2 Preventing material damage

***NOTICE:***
Harsh chemicals such as bleach-based products can damage your dishwasher.
- Do not use harsh chemicals such as bleach-based products to clean your dishwasher.

Certain cleaning products may damage the appliance.
- Do not use a steam cleaner.
- So as not to scratch the finish on the appliance, do not use sponges with a rough surface or abrasive cleaning agents.

Avoid stainless steel polish
- Do not use stainless steel polish on an anti-fingerprint finish or a black stainless finish.

Escaping water vapor can damage cabinetry.
- When the program ends, let the appliance cool down a bit before opening the door.

Protect your appliance from the elements.
- Protect against freezing to avoid possible damage to the fill valve. Damage caused by freezing is not covered by the warranty.

Special salt for dishwashers can damage the tub due to corrosion.
- To make sure that any special salt that escapes is washed out of the tub, add the special salt to the dispenser for special salt immediately before the program starts.

Detergent may damage the water softening system.
- Only fill the dispenser of the water softening system with special dishwasher salt.

# 3 Environmental protection and energy-saving

## 3.1 Saving energy

If you follow these instructions, your appliance will use less power and water.

Use the Normal program.
- ✔ The Normal program is energy-efficient and environmentally friendly.
  → *"Dishwasher Cycles", Page 10*

Change the sensor setting to the default.
- ✔ Consumption is reduced.
  → *"Sensors", Page 6*

Zeolith drying automatically helps to save energy.
- ✔ → *"Zeolith drying Ⓩ", Page 6*

## 3.2 Zeolith drying Ⓩ

The appliance features a Zeolith container. Zeolith drying lets you save energy.
Zeolite is a mineral that can store moisture and energy and then release them again.
During dishwashing energy is used to heat up the washing water and dry the mineral.
During the drying phase, moisture from the interior of the dishwasher is stored in the mineral and heat is released. The heat is blown out into the interior of the dishwasher with dry air. This speeds up and improves drying.
Therefore, zeolith drying is very efficient.

**Note:** To avoid impairing Zeolith drying performance, do not position dishware parts directly in front of the intake opening or the blow opening of the Zeolith container.
Do not position heat-sensitive dishware parts directly in front of the blow opening of the Zeolith container.
→ *"Appliance", Page 7*

## 3.3 AquaSensor

The AquaSensor is an optical measuring device (light barrier) which measures the turbidity of the washing water. You can save water with the AquaSensor.
The operation of the AquaSensor depends on the selected cycle. If the soiling level is high, the washing water is drained off and replaced with fresh water. If the soiling level is lower, the washing water is used in the next rinse, so reducing water consumption by 3-6 liters. In the Auto cycles the temperature and run time are additionally adjusted to the level of soiling.

## 3.4 Sensors

The sensors adjust the cycle sequence and strength in the Auto cycles depending on the level and type of soiling. The sensor has different sensitivity levels that can be changed in the basic settings.

| Sensor setting | Description |
|---|---|
| SE:00 | Optimal setting for mixed loads and heavily soiled dishware. Saves both energy and water. |
| SE:01 | Adjusts the cycle strength for effective removal of food remnants even with low soiling levels. Energy and water consumption are adjusted accordingly. |
| SE:02 | Adjusts the cycle strength for difficult conditions of use, e.g. stubborn dried-on food remnants. Recommended setting when using organic or ecological detergents containing low levels of active agents. Energy and water consumption are adjusted accordingly. |

# 4 Familiarizing yourself with your appliance

## 4.1 Appliance

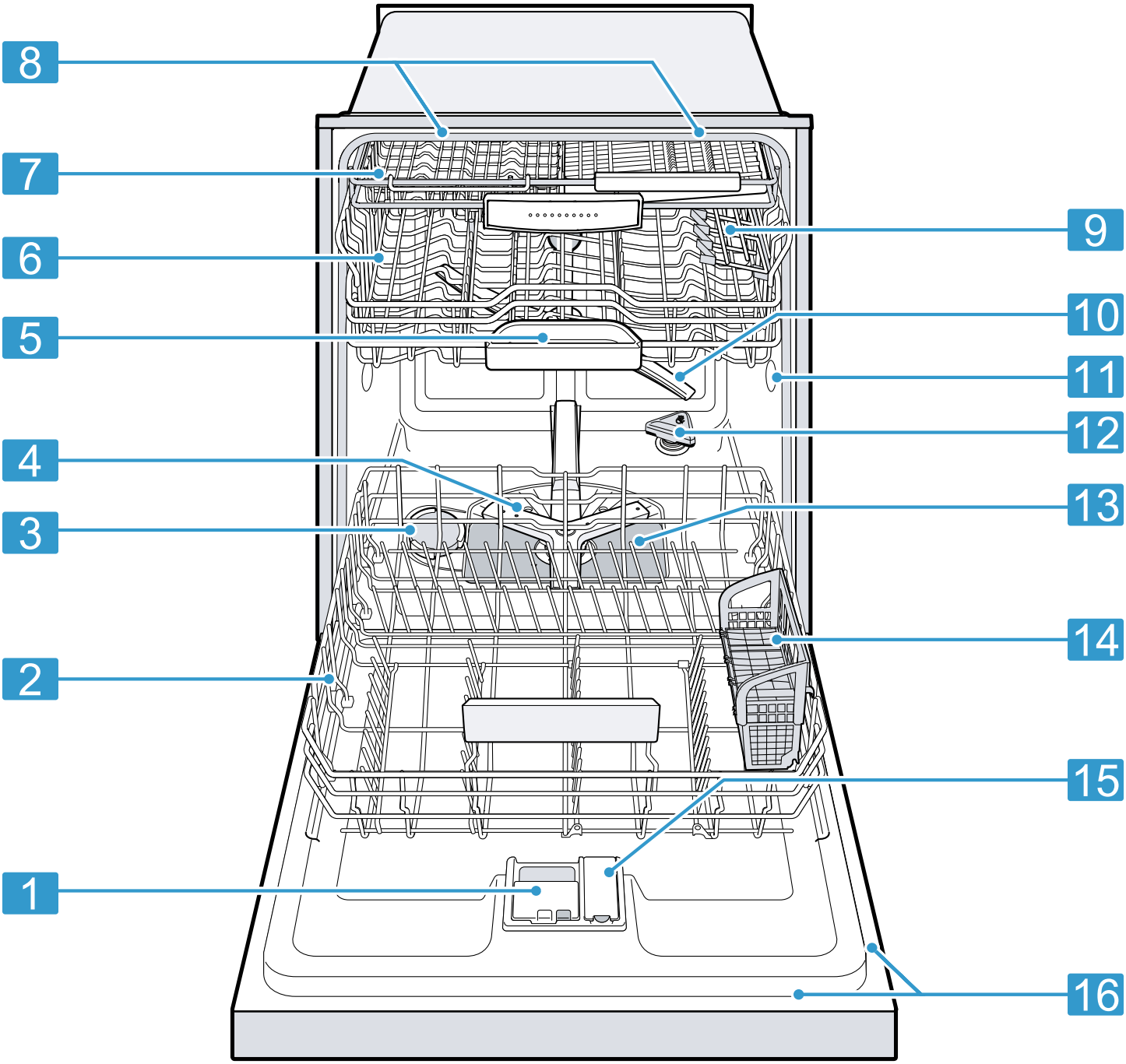


| | | |
|---|---|---|
| 1 | Detergent dispenser | Add detergent to the detergent dispenser. |
| 2 | Lower rack | Lower rack → *Page 13* |
| 3 | Dispenser for special salt | Add special salt to the dispenser for special salt.<br>→ *"Water softening system", Page 15* |

[1] Depending on the appliance specifications

| | | |
|---|---|---|
| 4 | Lower spray arm | The lower spray arm washes the dishware in the lower rack.<br>If the dishware has not been washed properly, clean the spray arms. |
| 5 | Detergent tab collecting tray | During the wash cycle, detergent tabs automatically drop out of the detergent dispenser into the tab collecting tray, where they can dissolve fully. |
| 6 | Upper rack | Upper rack → *Page 12* |
| 7 | Smart Load 3rd rack | → *"Smart Load 3rd rack", Page 13* |
| 8 | EmotionLight | Interior lighting of the appliance.<br>→ *"Overview of the basic settings", Page 22* |
| 9 | Cup shelf[1] | Cup shelf → *Page 14* |
| 10 | Upper spray arm | The upper spray arm washes the dishware in the upper rack.<br>If the dishware has not been washed properly, clean the spray arms. |
| 11 | Intake opening of the Zeolith container | The intake opening is required for Zeolith drying → *Page 6*. |
| 12 | Blow opening of the Zeolith container | The blow opening is required for Zeolith drying → *Page 6*. |
| 13 | Filter system | Filter system → *Page 25* |
| 14 | Silverware basket | Silverware basket |
| 15 | Dispenser for rinse aid | Rinse aid is added to the dispenser for rinse aid.<br>→ *"Rinse aid system", Page 16* |
| 16 | Rating plate | Rating plate with E number and FD number → *Page 38*.<br>You will need this data to contact Customer service → *Page 38*. |

[1] Depending on the appliance specifications

## 4.2 Controls

You can use the control panel to configure all functions of your appliance and to obtain information about the operating status.

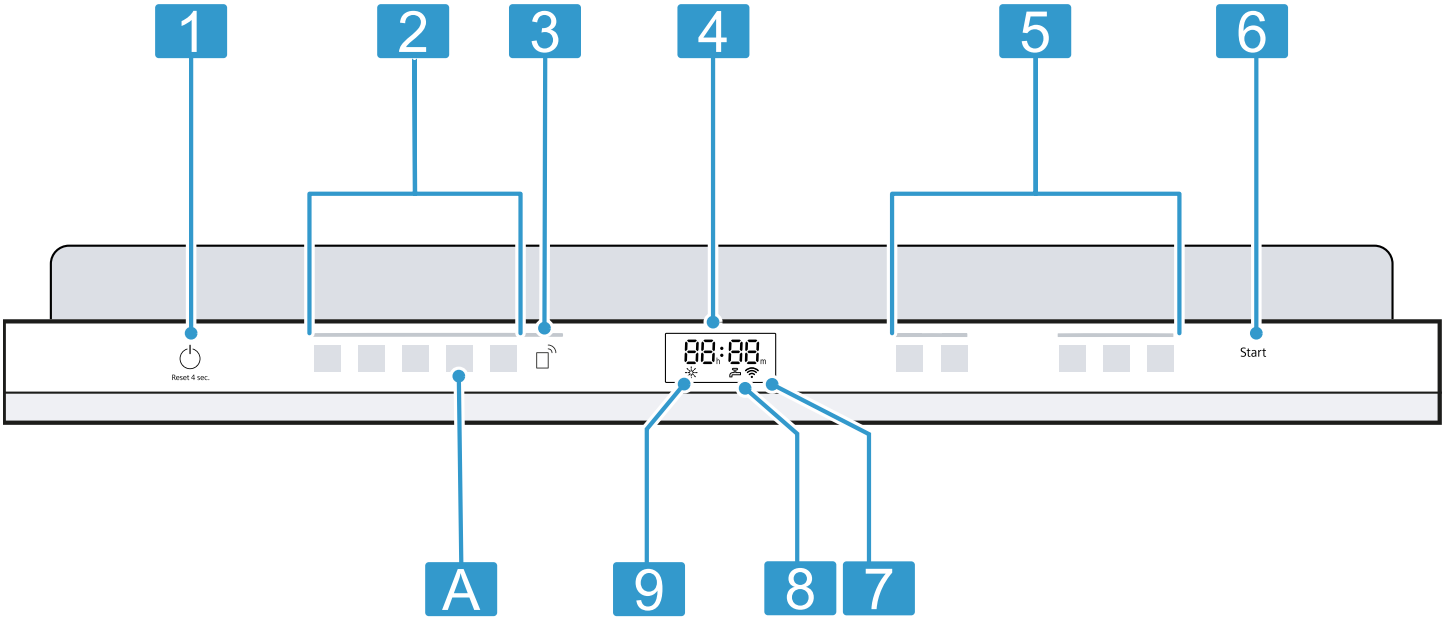

| | | |
|---|---|---|
| A | Button A | If you press A for approx. 3 seconds, you can open the basic settings.<br>→ *"Changing the basic settings", Page 23* |
| 1 | ON/OFF button and reset button Reset 4 sec. | Switching on the appliance<br>Switching off the appliance<br>Terminating the wash cycle → *Page 21* |
| 2 | Cycle buttons | Cycles → *Page 10* |
| 3 | Remote Start | → *"Remote Start", Page 24* |
| 4 | Display | The display shows information about the remaining run time or basic settings. You can change the basic settings via the display and the setting buttons.<br>→ *"Changing the basic settings", Page 23* |
| 5 | Cycle buttons and options | Cycles → *Page 10*<br>Options → *Page 11* |
| 6 | Start button Start | Starting the wash cycle → *Page 21* |
| 7 | WLAN display | Home Connect → *Page 23* |
| 8 | Water supply display | Display for water supply |
| 9 | Rinse aid refill indicator | Rinse aid system<br>→ *"Adding rinse aid", Page 16* |

# 5 Dishwasher Cycles

Below is an overview of the different cycles available on your dishwasher.
The running time may vary depending on the cycle selected. The running time depends on the water temperature, the quantity of dishware, the level of dirt and the option selected. The running time will change if the rinse aid system is switched off or rinse aid needs to be added. The consumption values relate to normal conditions and a water hardness of 16 - 20 °E. Different influencing factors such as water temperature or pipe pressure may result in deviations.

| Cycle | Purpose | Cycle sequence | Usage<br>1) Hour/min.<br>2) Electrical/kWH<br>3) Water/gal |
|---|---|---|---|
| Heavy | Dishware:<br>■ Washing pots and pans, non-fragile dishware and silverware<br>Level of soiling:<br>■ Removing stubborn burned or dried on food remnants containing starch and protein. | Intensive<br>■ Pre-Rinse<br>■ Cleaning 151 °F – 160 °F<br>■ Intermediate rinse<br>■ Final rinse 151 °F<br>■ Drying | ■ 1) 2:05 - 2:20<br>■ 2) 1.110 - 1.140<br>■ 3) 4.9 - 6.4 |
| Auto | Dishware:<br>■ Cleaning mixed dishware and silverware.<br>Level of soiling:<br>■ Removing common household food remnants lightly dried-on. | Sensor controlled:<br>■ Optimized by sensors depending on the soiling of the rinse water.<br>■ More intensive washing in the back half of the lower rack. | ■ 1) 1:45 - 2:05<br>■ 2) 0.820 - 0.860<br>■ 3) 3.4 - 5.4<br>**Note:** The displayed cycle time indicates an average value. |
| Normal | Dishware:<br>■ Cleaning mixed dishware and silverware.<br>Level of soiling:<br>■ Removing common household food remnants lightly dried-on. | Most economical cycle:<br>■ Pre-Rinse<br>■ Cleaning 113 °F – 146 °F<br>■ Intermediate rinse<br>■ Final rinse 136 °F<br>■ Drying | ■ 1) 2:10 - 2:35<br>■ 2) 0.700 - 0.990<br>■ 3) 2.4 - 6.4 |
| Speed 60® | Dishware:<br>■ Cleaning mixed dishware and silverware.<br>Level of soiling:<br>■ Removing common household food remnants lightly dried-on. | Time-optimized:<br>■ Cleaning 122 °F<br>■ Intermediate rinse<br>■ Final rinse 158 °F<br>■ Drying | ■ 1) 1:00<br>■ 2) 0.840<br>■ 3) 3.8 |
| Favorite | - | - | ■ 1) 1:45 - 2:05<br>■ 2) 0.820 - 0.860<br>■ 3) 3.4 - 5.4 |

## 5.1 Energy Guide

The Energy Guide label was based on the Normal soil sensing cycle.
The unit was tested without any rinse aid (liquid) in the rinse aid dispenser. A single dose of detergent was inserted into the detergent dispenser, with no detergent being used in the prewash. The unit was not subjected to truncated testing per the definitions in the test procedure. We recommend that dish loads such as the one in the energy certification test have the rack position set in the

highest position. Recommended for daily, regular or typical use to completely wash a full load of normally soiled dishes.

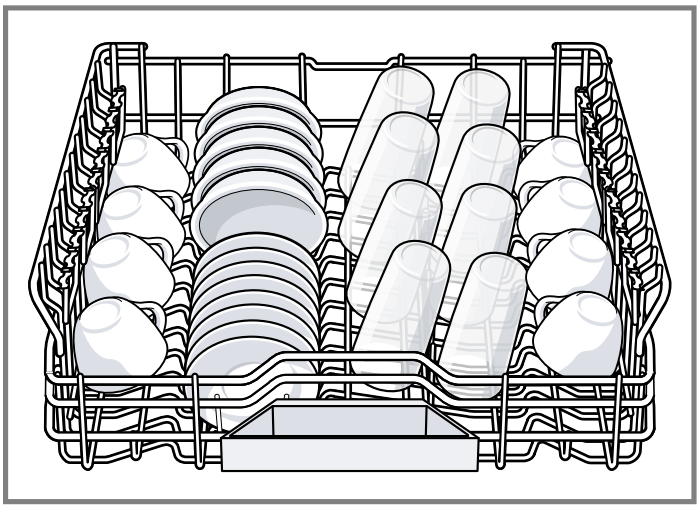

## 5.2 Favorite ☆

With this function, you can save a combination of a Cycle and an Option.
You can save the selected Cycle and Option combination via the Home Connect app or on the appliance.
When programs have been downloaded to the appliance, the name of the program will be displayed in the app. The display alternately shows "AP:P" and the remaining running time.

**Tip:** You can use the Home Connect app to download additional Cycles and Options and save them. [1]

**Save Favorite ☆ on the appliance.**

1. Press ON/OFF.
2. Press the right cycle button.
3. Press the button for the relevant options.
4. Press Favorite button for 3 seconds.

✔ The selected cycle and option will flash.
✔ The Favorite button flashes.
✔ The program combination is saved.

**Tip:** To reset the cycle, either use the Home Connect app or reset your appliance back to the factory settings.
→ *"Overview of the basic settings", Page 22*

# 6 Options

Here is an overview of the different options available on your dishwasher.

| Option | Use |
|---|---|
| Crystal Dry | Patented technology thoroughly dries dishes and plastics such as baby bottles and food storage containers. Natural minerals transform moisture into heat up to 176F/80C to get dishes, even plastics, 60% drier.<br>Extends drying time. |
| sanitize<br>Sanitize | ■ To ensure a higher hygiene status for the appliance and dishware, the temperature is increased and maintained for an extra-long period.<br>■ Especially suitable for cleaning chopping boards or baby bottles.<br>■ Continuous use of this option improves the hygiene status.<br>■ This will increase the run time and energy consumption.<br>■ When the cycle has ended, the display shows "SAnI". |
| front<br>front | ■ The lower spray arm provides intensive cleaning for dishware in the front of the lower rack.<br>■ Place dirty, hard to clean dishware in the front of the lower rack, e.g. casserole dishes, pots and pans.<br>■ This intensive cleaning may increase water and energy consumption.<br>■ The run time is extended. |
| back<br>back | ■ The lower spray arm provides intensive cleaning for dishware in the back of the lower rack.<br>■ Place dirty, hard to clean dishware in the back of the lower rack, e.g. casserole dishes, pots and pans.<br>■ This intensive cleaning may increase water and energy consumption.<br>■ The run time is extended. |
| custom<br>custom | ■ Using the Home Connect® app, customize the 4 zones and the cleaning intensity level.<br>■ Maximum 3 light wash zones recommended.<br>The settings made for this function remain saved until you redefine the zones in the bottom basket via the Home Connect® app.<br>If you do not specify any zone via the Home Connect® app, all 4 zones in the lower rack will then be activated with the lower spray arm for efficient and intensive cleaning. |

[1] Depending on the appliance specifications

**WARNING**

Concerning dishware sanitation, be aware of the following.

- Only sanitizing cycles have been designed to meet the requirements for soil removal and sanitation efficacy. There is no intention, either directly or indirectly, to imply that all cycles on a certified machine have passed the sanitization performance test.

# 7 Features

You can find an overview of the possible features of your appliance and how to use them here.
These features depend on your appliance model.

## 7.1 Upper rack

Arrange cups, glasses, and small tableware items in the top rack.

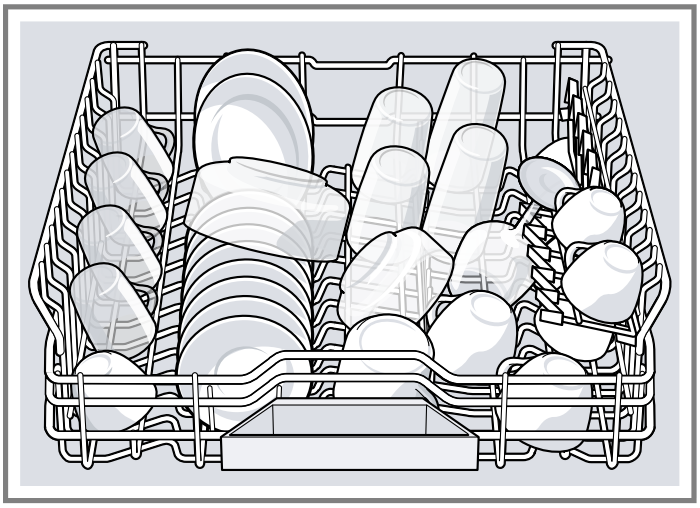

You can adjust the height of the upper rack to make room for larger items.

### Adjusting upper rack with RackMatic®

To wash large items in the racks, adjust the shelf height of the upper rack.

1. Pull out the upper rack.
2. To prevent the rack from suddenly dropping down, hold the side of the rack by the top edge.
3. Press in the right and left hand levers on the outside of the rack.

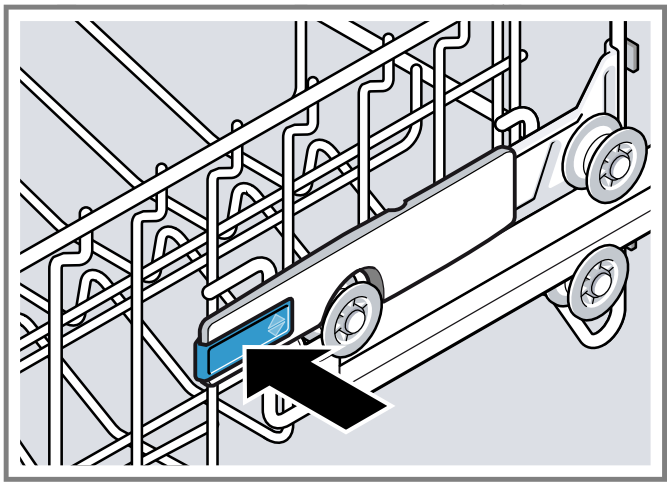

4. Raise or lower the rack evenly to the right level.

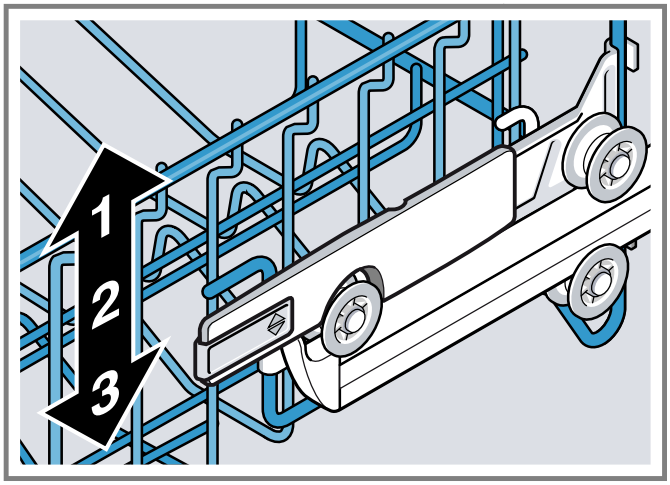


Check that the rack is level on both sides.

5. Release the levers.

✔ The rack clicks into position.

6. Slide the rack in.

## 7.2 Lower rack

Arrange pans and plates in the lower rack.

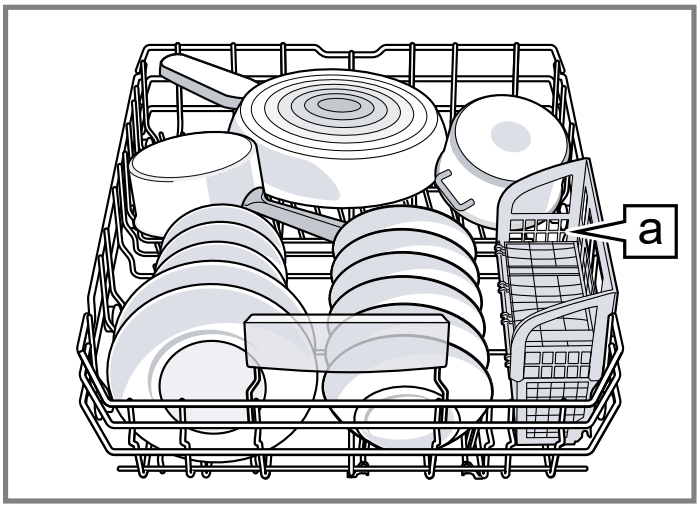


Silverware basket [a][1]

## 7.3 Silverware Basket

Arrange the silverware in the silverware basket, ensuring that the items are not nestled together and with the sharp points down.

**WARNING**

The sharp points and edges of knives and other sharp utensils can cause serious injury.

- Load knives and other sharp utensils with edges down. Do not allow children to handle or play near knives and sharp utensils

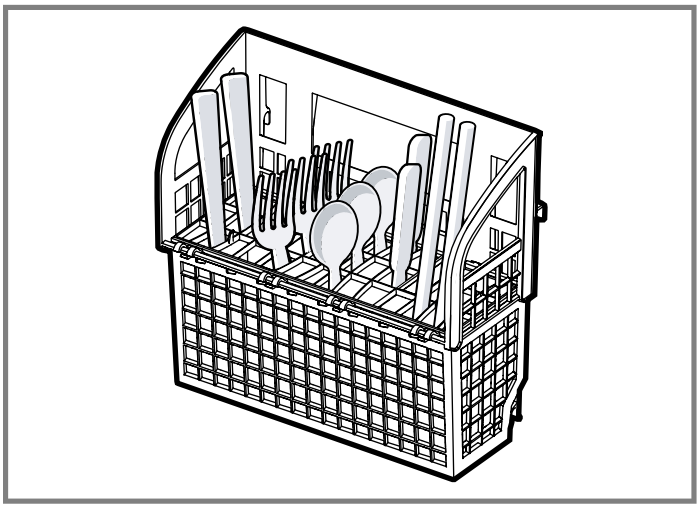

## 7.4 Smart Load 3rd rack

Use the Smart Load 3rd rack to wash items of silverware that are lightly soiled as well as small items of dishware, e.g. small cups, bowls or cooking utensils.

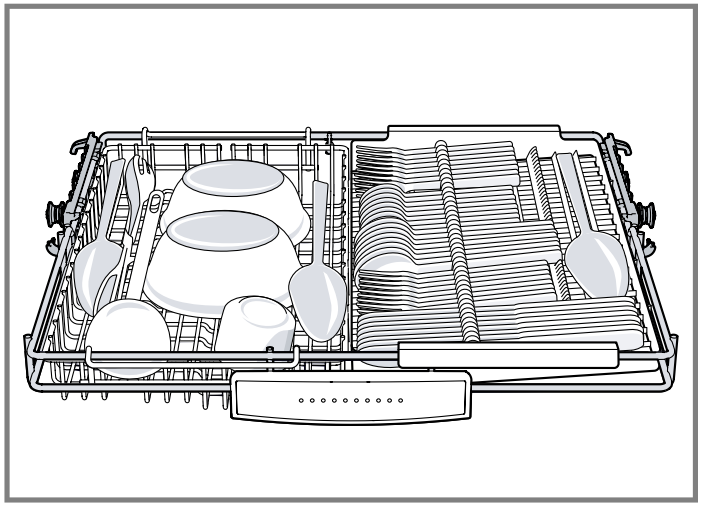

### Exchanging the Smart Load 3rd rack inserts

You can exchange the inserts to have two wire inserts for bowls and cooking tools or two plastic inserts for silverware.

- Simply remove one modular insert and replace with another.

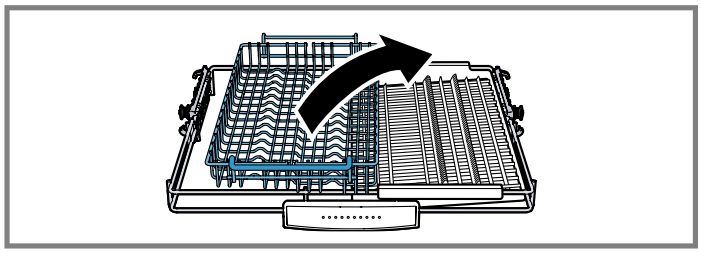

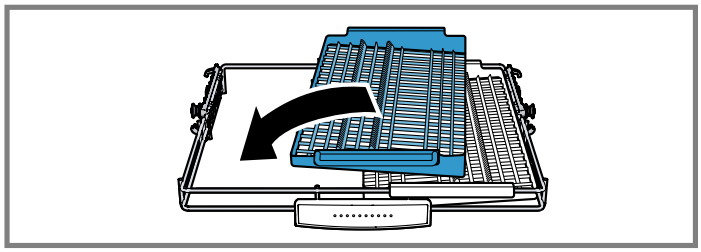

[1] Depending on the appliance specifications

## 7.5 Cup shelf

Use the cup shelf and the space underneath for small cups and glasses or for large items of silverware, e.g. cooking spoons or serving cutlery.

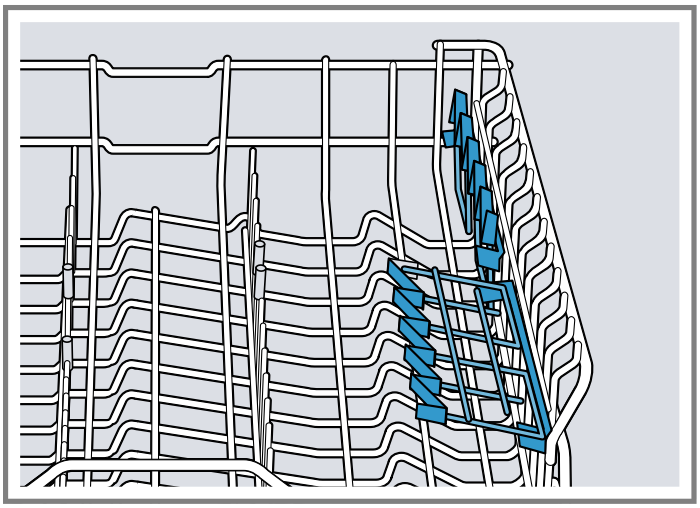

If you do not need the cup shelf, you can fold it up.

## 7.6 Flip tines

Use the flip tines to position dishware securely, e.g. plates.

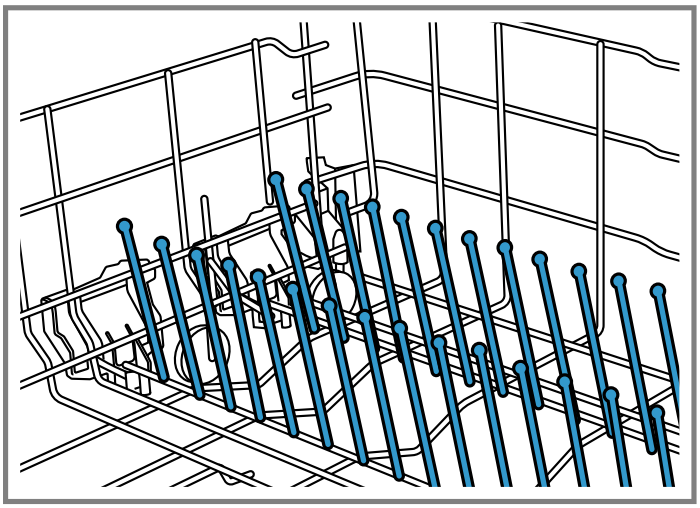

You can fold the tines down to arrange pans, bowls and glasses better.[1]

### Folding down the tines[1]

If you do not need the tines, fold them down.

1. Push the lever forward ① and fold down the tines ②.

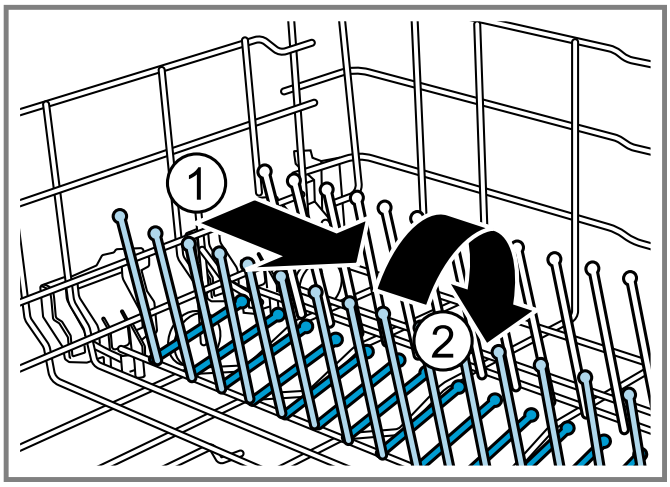


2. To use the tines again, fold them back up.

✔ The tines click into position.

## 7.7 Rack heights

Set the racks at the right height.

| Setting | Upper rack | Lower rack |
|---|---|---|
| 1 max. ø | 18 cm / 7" | 33 cm / 13" |
| 2 max. ø | 20.5 cm / 8" | 30.5 cm / 12" |
| 3 max. ø | 23 cm / 9" | 28 cm / 11" |

**Tip:** If you remove the 3rd rack, you can place large items of dishware in the lower rack.

[1] Depending on the appliance specifications

# 8 Before using for the first time

## 8.1 Initial use

Before the first use, or after a factory reset, you will need to configure the settings.

**Tip:** Connect your appliance to a mobile device. You can conveniently change all settings using the Home Connect® app.
→ *"Home Connect® quick start", Page 24*

**Requirement:** The appliance has been installed and connected.

1. Add special salt.
2. Add rinse aid. → *Page 16*
3. Switch on the appliance.
4. Set the water softening system.
5. Set the amount of rinse aid.
6. Add detergent.
7. Start the Program with the highest cleaning temperature without dishware.

   To remove any marks from water or other residues, we recommend you operate the appliance without dishware before using it for the first time.

**Tip:** You can change these settings and other Basic settings at any time.

# 9 Water softening system

Hard water leaves limescale on dishware as well as the washing tank, and parts of the appliance may become blocked.
To ensure good dishwashing results, you can treat the water with special salt and the water softening system. To avoid damage to the appliance, water with a hardness above 9 °E must be softened.

## 9.1 Overview of water hardness settings

You can find an overview of the water hardness values that can be selected here.
You can find out how hard your water is from your local water company or by using a water hardness tester.

| Water hardness °E | Hardness range | mmol/l | Setting value |
|---|---|---|---|
| 0 - 8 | soft | 0 - 1.1 | H:00 |
| 9 - 10 | soft | 1.2 - 1.4 | H:01 |
| 11 - 12 | medium | 1.5 - 1.8 | H:02 |
| 13 - 15 | medium | 1.9 - 2.1 | H:03 |
| 16 - 20 | medium | 2.2 - 2.9 | H:04 |
| 21 - 26 | hard | 3.0 - 3.7 | H:05 |
| 27 - 38 | hard | 3.8 - 5.4 | H:06 |
| 39 - 62 | hard | 5.5 - 8.9 | H:07 |

**Note:** Set the water hardness determined on your appliance.
→ *"Setting the water softening system", Page 15*
With a water hardness of 0 - 8 °E you can dispense with special salt for dishwashers and switch off the water softening system.
→ *"Switching off the water softening system", Page 16*

## 9.2 Setting the water softening system

Set the water hardness on your appliance.

1. Determine the water hardness and the appropriate setting value.
   → *"Overview of water hardness settings", Page 15*
2. Press ON/OFF.
3. To open the basic settings, press the A button for 3 seconds.
4. Press Start repeatedly until the right water hardness has been set.

   The value H:00 is set at the factory.
5. To store the settings, press the A button for 3 seconds.

## 9.3 Special Dishwasher Salt

You can use special dishwasher salt to soften the water.

### Adding dishwasher salt

If the salt refill indicator lights up, add special dishwasher salt to the dispenser for salt just before the cycle starts.
The amount of special dishwasher salt required depends on the water hardness. The higher the water hardness, the greater the amount of salt required.

***NOTICE:***
Detergent may damage the water softening system.
- Only fill the dispenser of the water softening system with special dishwasher salt.

Special salt for dishwashers can damage the tub due to corrosion.
- To make sure that any special salt that escapes is washed out of the tub, add the special salt to the dispenser for special salt immediately before the program starts.

1. Unscrew the lid of the salt dispenser and remove.

2. Before the first use: Fill the dispenser full with water.
3. **Note:** Only use special salt specified for dishwashers.
   Do not use salt tablets.
   Do not use table salt.

   Add the special dishwasher salt to the dispenser.

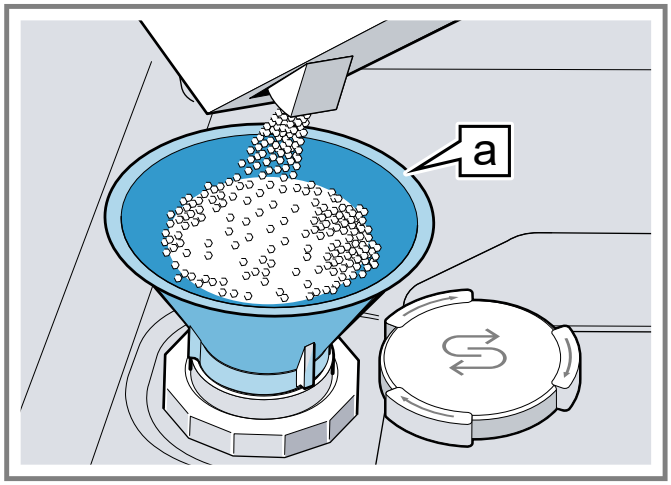


   Funnel

   Fill the dispenser completely with the salt. The water in the dispenser is displaced and forced out.
4. Place the lid back on the dispenser and turn to close.

## 9.4 Switching off the water softening system

If you do not need to use the water softening system, e.g. you already have a whole house water softening system, you can turn the system off.

**Note**
To avoid damage to the appliance, only switch off the water softening system in the following cases:

- The water hardness is max. 26 °E and you are using combined detergents with salt replacement substances. According to manufacturers, combined detergents with salt replacement substances can generally only be used up to a water hardness of 26 °E without adding special salt.
- The water hardness is 0 - 8 °E. You can omit special salt.

1. Press ON/OFF.
2. To open the basic settings, press the A button for 3 seconds.
3. Press Start repeatedly until the display shows H:00.
4. To store the settings, press the A button for 3 seconds.

✔ The water softening system is switched off and the salt refill indicator is deactivated.

# 10 Rinse aid system

## 10.1 Rinse aid

For optimum drying results, use rinse aid.
Only use rinse aid intended for household dishwashers.

### Adding rinse aid

If the rinse aid refill indicator lights up, fill the dispenser with rinse aid. Only use rinse aid intended for household dishwashers.

1. Press the catch on the lid of the dispenser for rinse aid ① and lift ②.

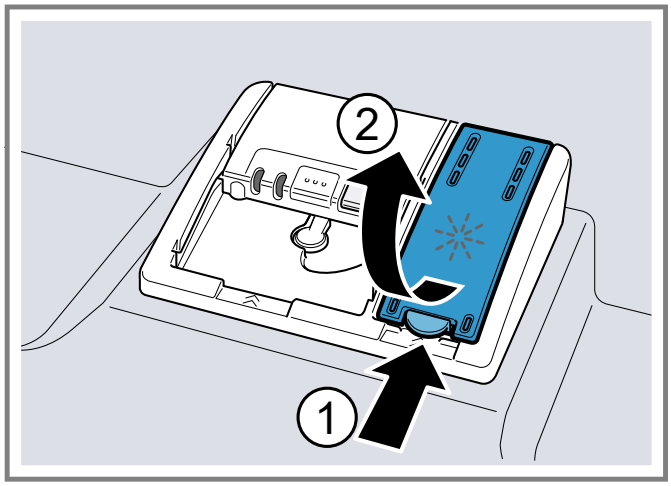


2. Add rinse aid up to the max mark.

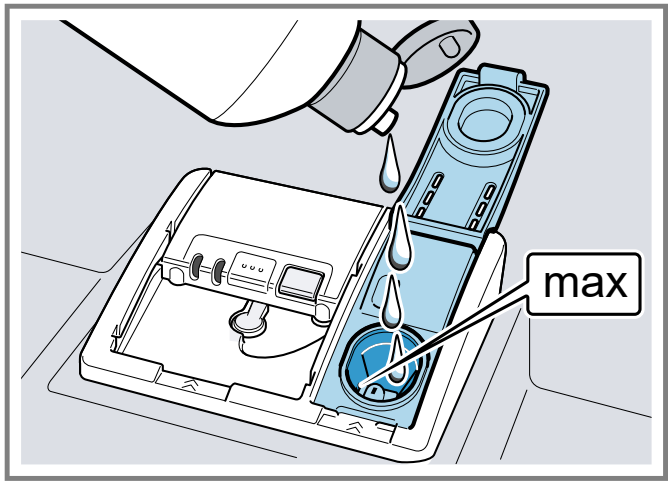


3. If rinse aid spills out, remove it from the tub.

   Spilled rinse aid can cause excessive frothing during the wash cycle.
4. Close the lid of the dispenser for rinse aid.

✔ The lid clicks into position.

## 10.2 Setting the amount of rinse aid

If there are streaks or water spots on dishware, change the amount of rinse aid.

1. Press ON/OFF.
2. To open the basic settings, press the A button for 3 seconds.
3. Press A repeatedly until the display shows the value set at the factory r:05.
4. Press Start repeatedly until the right amount of rinse aid has been set.
   – A low setting adds less rinse aid during the wash cycle and reduces streaking on dishware.

– A higher setting adds more rinse aid during the wash cycle, reduces water spots and improves the drying result.

5. To store the settings, press the A button for 3 seconds.

### 10.3 Switching the rinse aid system off

If you choose not to use rinse aid, you can turn the rinse aid system off.

**Tip:** Rinse aid within a combination detergent has limited effectiveness. You will generally get better results using a separate rinse aid.

1. Press ON/OFF.
2. To open the basic settings, press the A button for 3 seconds.
3. Press A repeatedly until the display shows the value set at the factory r:05.
4. Press Start repeatedly until the display shows r:00.
5. To store the settings, press the A button for 3 seconds.

✔ The rinse aid system is switched off and the rinse aid refill indicator is deactivated.

## 11 Detergent

Find out which detergents are suitable for your appliance.

### 11.1 The correct detergents

Only use detergents that are made for dishwashers, either basic or combination detergents.
For the best washing and drying results, use a separate detergent, then add Special salt and Rinse aid → *Page 16* separately.
Modern, powerful detergents mainly use a low-alkaline formulation with enzymes. Enzymes break down starch and remove protein. Oxygen-based bleaching agents are generally used to remove colored stains, e.g. tea or ketchup.

**Note:** Follow the manufacturer's instructions for each detergent.

| Detergent | Description |
|---|---|
| Tabs | Tabs are perfect for all cleaning functions and do not need to be measured out.<br>However, with shorter Cycles → *Page 10* sometimes tabs do not dissolve entirely and leave residues of detergent. This may reduce its effectiveness. |
| Powder detergent | Powder detergent is recommended for shorter cycles. The dosage can be adjusted to the level of soiling. |
| Liquid detergent | Liquid detergent works faster and is recommended for shorter cycles without a pre-rinse.<br>Sometimes liquid detergent may leak out despite the detergent dispenser being closed. This is not a problem, just remember the following:<br>■ Only choose a cycle without PreRinse.<br>■ Do not use the Delay Start option.<br>The dosage can be adjusted to the level of soiling. |

### 11.2 Incompatible detergents

Do not use a detergent which is not designated for dishwasher use or contains chlorine.

| Detergent | Description |
|---|---|
| Liquid hand soap | Liquid hand soap can cause increased frothing and damage the appliance. |
| Detergent containing chlorine | This may leave chlorine residue on dishware. |

### 11.3 Information on Detergent

Follow the instructions on detergents in everyday use.

- Detergents marked as "ecological" (environmentally friendly) generally contain lower levels of active agents or none at all. The cleaning effect may be reduced.
- Adjust the rinse aid and the water softening system settings in accordance with the detergent or combination detergent in use.
- According to manufacturers, combination detergents with salt replacement substances can only be used up to a certain water hardness, usually 26 °E, without adding special salt. For the best washing and drying results we recommend using special salt from a water hardness of 17 °E.
- Any rinse aid component of a combination detergent has limited effectiveness. You will have better results using a separate rinse aid.
- To prevent sticking, only touch detergents in a water-soluble pouch with dry hands and only ever place them in a dry detergent dispenser.
- Even if the rinse aid and special salt refill indicators light up, the wash cycles will run properly with combination detergents.
- Use tablets with enhanced drying results.

### 11.4 Adding Detergent

1. To open the detergent dispenser, press the locking latch.

2. Add the detergent to the dry detergent dispenser.

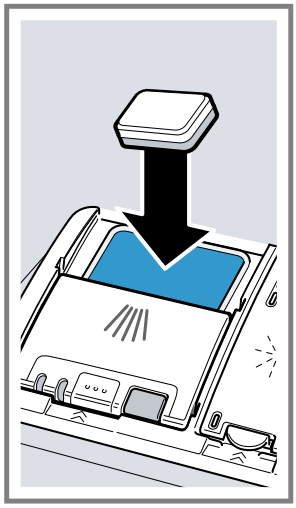

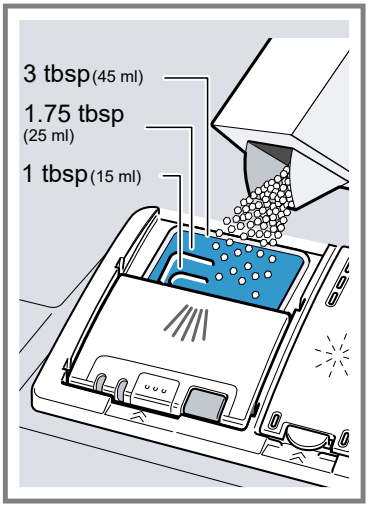


If you are using tablets, one is enough. Insert the tablets in a horizontal position.
If you are using powder or liquid detergent, follow the manufacturer's instructions and quantities for dosage in the detergent dispenser.
1.5 to 1.75 Tbsp (20 ml – 25 ml) detergent is sufficient for normal soiling. If dishware is only lightly soiled, slightly less than the amount of detergent specified is usually sufficient.

3. Close the lid of the detergent dispenser.

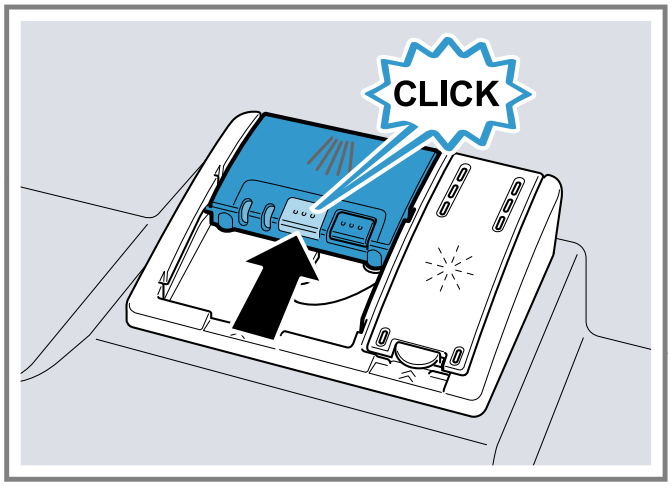


✔ The lid clicks into position.
✔ The detergent dispenser will open automatically at the optimum time during the cycle. Powder or liquid detergent will spread around the washing tank and dissolve there. Tablets will fall into the tablet collecting tray and dissolve in the right dosage. In order to ensure that tablets can dissolve evenly, do not place any other objects in the tablet collecting tray.

## 11.5 Detergent table

Detergent amount guidelines

**Note:** This dishwasher provides the optimum cleaning performance without the use of a prewash detergent and further enhances our standards of sustainability and efficiency.

| | |
|---|---|
| Auto | 1.75 Tbsp (25 ml) or 1 tab |
| Normal | 1.75 Tbsp (25 ml) or 1 tab |
| Heavy | 3 Tbsp (45 ml) or 1 tab |
| Speed 60® | 1 Tbsp (15 ml) |

# 12 Dishware

Only wash dishware that is suitable for dishwashers.

**Note:** Decorated glassware and parts made of aluminum or silver may fade or discolor with dishwashing. Delicate types of glass may turn cloudy after a few wash cycles.

## 12.1 Damage to glass and dishware

Only put glasses and china in the dishwasher if they are labeled dishwasher-safe. Avoid damage to glass and dishware.

| Cause | Recommendation |
|---|---|
| The following types of dishes are not dishwasher-safe:<br>▪ Wooden utensils and dishes<br>▪ Decorative glassware, antique dishes and artistic hand-made pottery<br>▪ Plastic parts that are not heat-resistant<br>▪ Dishes made from copper or tin<br>▪ Dishes soiled with ash, wax, grease or paint<br>▪ Very small items of dishware | Only put dishes in the dishwasher if they are labeled dishwasher-safe. |
| The chemical composition of the detergent causes damage. | Use a detergent labeled as gentle to dishes. |
| Highly caustic alkaline or highly acidic cleaning solutions, in particular commercial or industrial cleaners, are not safe to use in the dishwasher with aluminum. | If you use highly caustic alkaline or highly acidic cleaning solutions, in particular commercial or industrial cleaners, do not put anything aluminum in the dishwasher. |
| The water temperature of the cycle is too high. | Select a cycle with lower temperatures.<br>After the cycle has ended, take glassware and silverware out of the appliance without delay. |
| The water temperature of the cycle is too high and the water is too soft. | Select a cycle with lower temperatures.<br>Use detergent with glass protection. |

| Cause | Recommendation |
|---|---|
| | Adjust the water hardness setting on your dishwasher. → *"Setting the water softening system", Page 15* |

## 12.2 Loading dishware

Arrange dishware correctly to optimize the dishwashing result and prevent damage to both dishware and the appliance. The noise level may also vary depending on the items placed in your dishwasher.

***NOTICE:***
Avoid dishwasher damage
- Do not load the dishwasher with paper products, plastic bags, packing materials or anything other than normal, dishwasher safe dishware and kitchenware.

**Tips**
- Using the appliance allows you to save energy and water compared to doing dishes by hand.
- See our website for examples of how to load your appliance efficiently.
- To save energy and water, load the machine with the number of place settings specified (standard load with dishes and silverware).
- For better washing and drying results, position items with curves or recesses at an angle so water can run off.

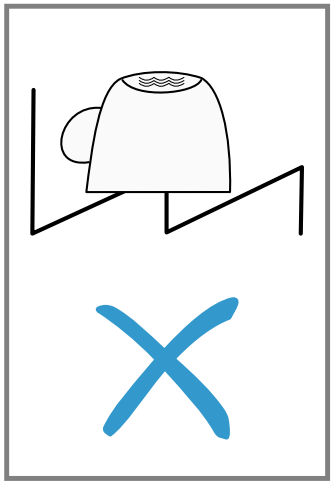

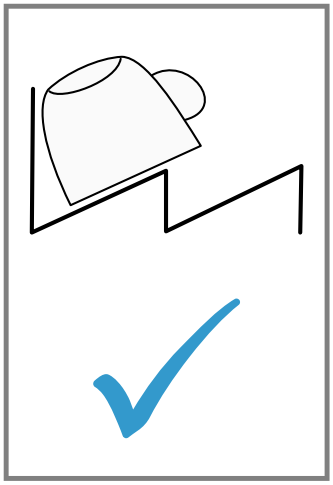

1. Remove large remnants of food from dishware.

   To save resources, do not pre-rinse dishware under running water.
2. Observe the following when arranging dishware:
   - Put heavily soiled dishware in the lower rack, e.g. pans. The more powerful spray jet ensures that the dishwashing result will be better.
   - To avoid damage to dishware, arrange it so it is stable and cannot tip over.
   - To avoid injury, arrange silverware with the points and sharp edges facing down.
   - Position containers with the openings facing down so no water can collect in them.
   - Do not block the spray arms - make sure that they can turn freely.
   - Do not place small parts in the collecting tray and do not block it with dishware so as not to obstruct the lid of the detergent dispenser.

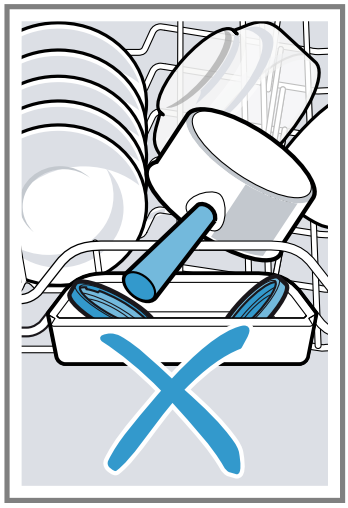

## 12.3 Removing dishware

**⚠ CAUTION**
Dishes can be very hot immediately after the cycle ends.
- Open the door slightly and allow dishes to cool for a few minutes before unloading.

1. To prevent water dripping onto dishware, unload it starting at the bottom and working up.
2. Check the washing tank and accessories for soiling and clean if necessary.
   → *"Cleaning and maintenance", Page 25*

## 12.4 Loading patterns

Recommended loading patterns.

**16 place settings:**
Lower rack

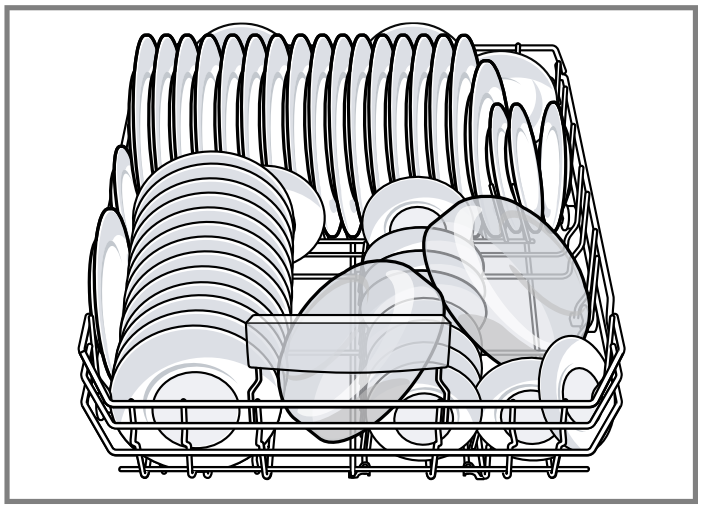

Upper rack

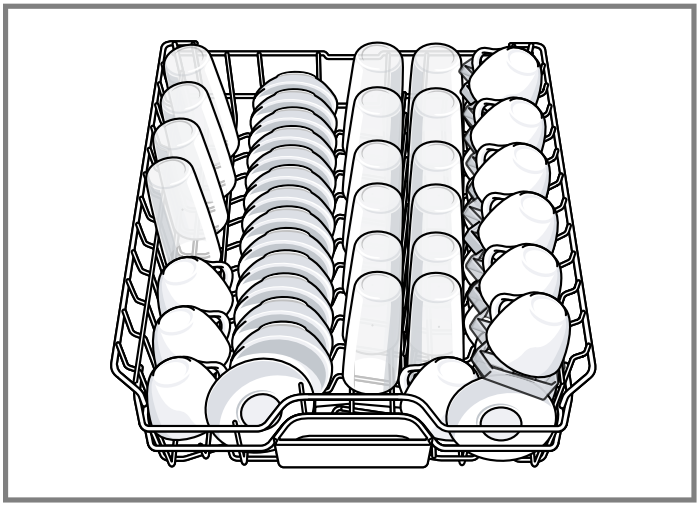

Upper rack

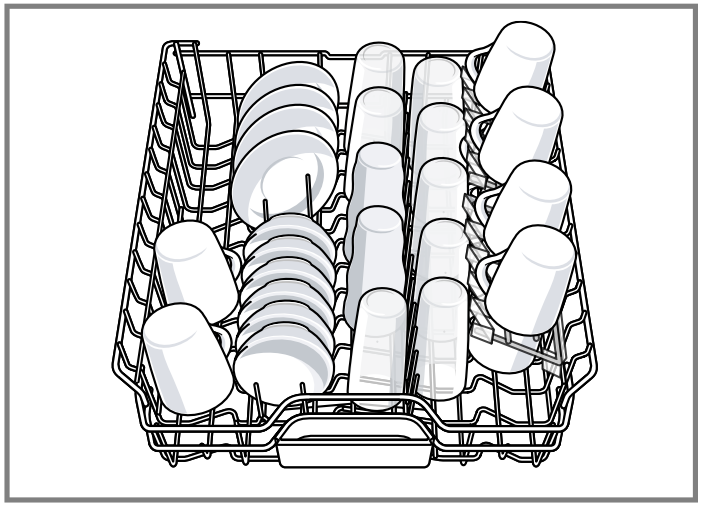

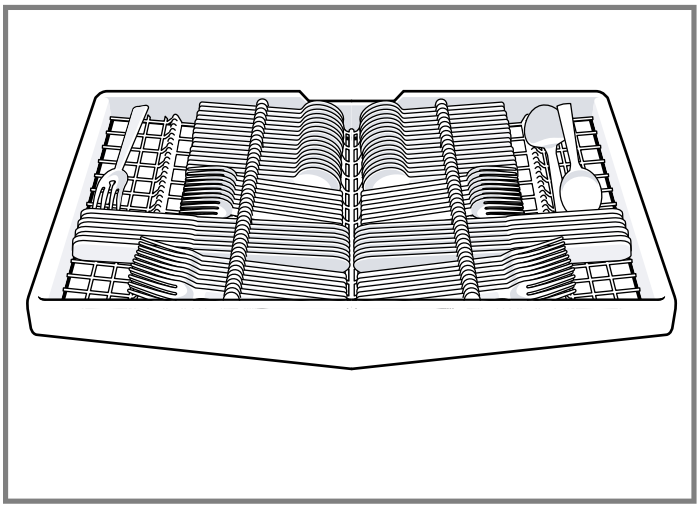

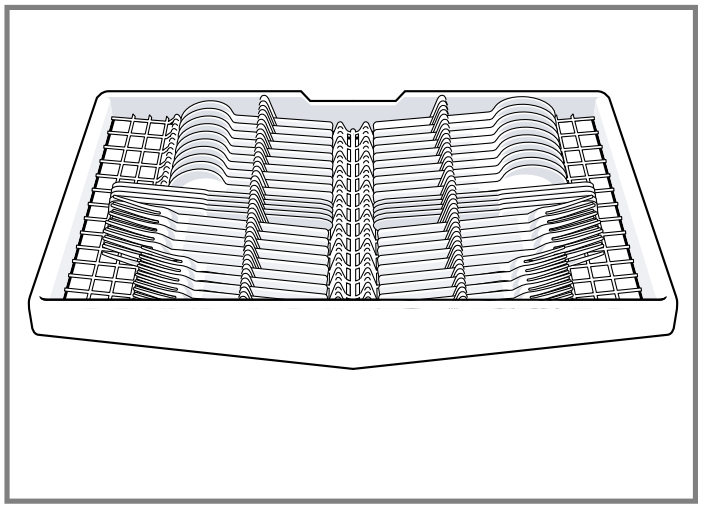

**Additional loading patterns for 10 place settings:**
Lower rack

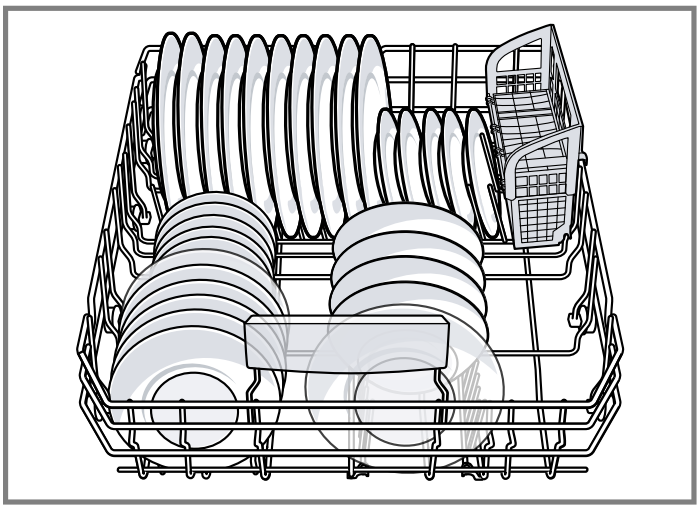

# 13 Basic Operation

## 13.1 Protection against unintentional operation

Your dishwasher has a built in feature to help prevent unintentional operation, e.g. by children. After starting the appliance, the door has to be closed within 4 seconds, otherwise the operation will be paused. If this occurs, follow the steps below to restart your dishwasher.

1. For top button controls: Press Start and close the door.
2. For front button controls: Close the door and press Start.

✔ The wash cycle will resume.

**Notes**

- Unintentional operation is activated when:
  - Pressing Start to begin a wash cycle
  - Setting Delay time and pressing Start
  - Opening the door while Delay time is active
  - Opening the door during a wash cycle.
- This feature cannot be deactivated.

## 13.2 Switching on the appliance

- Touch ON/OFF with a short 1 second touch.

  The cycle last selected and the option last selected will be set by default.
  The buttons on the appliance are touch sensitive and only require a quick, gentle touch.
  If you do not perform any actions on the appliance for 10 minutes, it will automatically switch off.

## 13.3 Setting a cycle

To adjust the wash cycle to the soiling level of the dishware, select a suitable program.

- Press the right cycle button.
- ✔ The cycle is set and the cycle button flashes.
- ✔ The remaining run time of the cycle appears on the display.

## 13.4 Setting options

You can set options to complete the chosen wash program.

**Note:** The available options depend on which program is selected.

- Press the button for the relevant option.
- ✔ The option is set and the option button flashes.

## 13.5 Setting the time delay

You can delay the start of the wash cycle via the Home Connect® app.

- Open the Home Connect® app and select the appliance.

  In the settings, you can use the time delay function to delay the start of the wash cycle.

## 13.6 Starting the wash cycle

- Press Start.
- ✔ The wash cycle has ended when the display shows "00h:00m".

**Notes**

- If you want to add more dishware while the appliance is running, do not use the collecting tray as a handle for the upper rack. You might touch the partially dissolved tablet.
- You can only change a cycle in progress if you can cancel it first.
  → *"Terminating the wash cycle", Page 21*
- To save energy, the appliance switches off automatically 10 minutes after the end of the wash cycle. If you open the appliance door immediately after the wash cycle has ended, the appliance will switch off after 4 seconds.

## 13.7 Interrupting the wash cycle

1. Press On/Off.

   The program is saved and the appliance switches off.
2. Press On/Off.
3. Press Start to resume the wash cycle.

## 13.8 Terminating the wash cycle

To end a cycle early or to switch from one that has already started, you will need to cancel it first.

- Press Reset 4 sec. for approx. 4 seconds.
- ✔ All displays light up.
- ✔ As soon as the displays are off, the display shows "00h:01m" and the residual water is pumped out.
- ✔ The cycle is cancelled and ends after approx. 1 minute.

## 13.9 Switching off the appliance

⚠ **CAUTION**

To avoid risk of injury, always use caution when opening the door during or following a wash cycle as hot water or steam may escape.

- Do not fully open the door until water noises have stopped and steam has subsided.

1. Please note the information on Preventing Material Damage → *Page 6*.
2. Press On/Off.

# 14 Basic settings

You can configure the basic settings for your appliance to meet your needs.

## 14.1 Overview of the basic settings

The basic settings depend on the features of your appliance.

| Basic setting | Display text | Selection | Description |
|---|---|---|---|
| W. hardness | H:00 [1] | H:00 - H:07 | Set the water softening system to your water hardness.<br>→ *"Setting the water softening system", Page 15*<br>Level H:00 switches the water softening system off. |
| Rinse aid disp. | r:05 [1] | r:00 - r:06 | Set the amount of rinse aid.<br>→ *"Setting the amount of rinse aid", Page 16*<br>Switch the rinse aid system off with level r:00. |
| Sensor setting | SE:00 [1] | SE:00 - SE:02 | Set the water sensor for identifying soiling.<br>→ *"Sensors", Page 6* |
| Extra Dry | d:00 [1] | d:00 - d:01 | The temperature is increased during the final rinse, which improves the drying result. This may increase the run time slightly.<br>**Note:** Not suitable for delicate items of dishware.<br>Switch Extra Dry on "d:01" or off "d:00". |
| EmotionLight | EL:02 [1] | EL:00 - EL:02 | Interior lighting.<br>■ With the setting "EL:00", the interior lighting is switched off.<br>■ With the setting "EL:01", the interior lighting can be activated via the ON/OFF ON/OFF button.<br>■ With the setting "EL:02", the interior lighting goes on when you open the appliance door.<br>When the appliance door is opened, the interior lighting switches off automatically after 10 minutes. |
| TimeLight® | S:01 [1] | S:00 - S:01 | Switch TimeLight on or off.<br>While the wash cycle is running, status information (delay time, cycle indicator or time remaining) is projected onto the floor below the appliance door. If the base panel is pulled forward or if the appliance is installed at eye level with the cabinet front fitted flush, the display is not visible.<br>Level "S:00" switches TimeLight off. |

[1] Factory setting (may vary according to model)

| Basic setting | Display text | Selection | Description |
|---|---|---|---|
| Start cycle | SP:00 [1] | SP:00 - SP:01 | Set a default cycle for when the appliance is switched on.<br>■ With the setting "SP:00", the last cycle selected and the last additional function selected are set by default when the appliance is switched on.<br>■ With the setting "SP:01", the standard cycle is set by default when the appliance is switched on. |
| Signal volume | SL:02 [1] | SL:00 -SL:03 | Adjusting the signal volume.<br>Level "SL:00" switches the signal tone off. |
| Button volume | bL:02 [1] | bL:00 - bL:03 | Set the button volume during operation.<br>Level "bL:00" switches the button tones off. |
| Wi-Fi | Cn:00 | Cn:00 - Cn:01 | Switch the wireless network connection on or off.<br>Level "Cn:00" switches the wireless network connection off.<br>The basic setting is not available until you have connected the appliance with the Home Connect® app.<br>→ *"Home Connect® ", Page 23* |
| Remote Start | rc:01 | rc:00 - rc:02 | Activate or deactivate<br>→ *"Remote Start", Page 24*.<br>The following settings are possible:<br>■ With the setting "rc:00", the option is permanently deactivated.<br>■ With the setting "rc:01", the option can be selected via the remote start button.<br>→ *"Activating Remote Start", Page 24*<br>■ With the setting "rc:02", the option is permanently activated.<br>The basic setting is not available until you have connected the appliance with the Home Connect® app.<br>→ *"Home Connect® ", Page 23* |
| Factory setting | rE: | Starting with Start<br>Y:ES<br>Confirming with Start | Restore changed settings to the factory settings.<br>The settings for initial use must be configured. |

[1] Factory setting (may vary according to model)

## 14.2 Changing the basic settings

**Tip:** Connect your appliance to a mobile device. You can conveniently change all settings using the Home Connect® app.
→ *"Home Connect® quick start", Page 24*

1. Press ON/OFF.
2. To open the basic settings, press the A button for 3 seconds.
   → *"Controls", Page 8*
3. Press the A button repeatedly until the display shows the required setting.
4. Press Start repeatedly until the display shows the right value.
   You can change one or more settings.
5. To store the settings, press the A button for 3 seconds.

# 15 Home Connect®

This appliance is network-capable. Connecting your appliance to a mobile device lets you control its functions via the Home Connect® app.
The Home Connect® services are not available in every country. The availability of the Home Connect® function depends on the availability of Home Connect® services in your country. You can find information on this at: www.home-connect.com.

To be able to use Home Connect®, you must first set up the connection to the WLAN home network (Wi-Fi [1]) and to the Home Connect® app.

The Home Connect® app guides you through the entire registration process. Follow the instructions in the Home Connect® app to implement the settings.

**Tips**

- Consult the Home Connect® documents supplied.
- Follow the instructions in the Home Connect® app as well.

**Note:** Also note the safety information in this instruction manual and ensure that it is also observed when operating the appliance using the Home Connect® app.

## 15.1 Home Connect® quick start

Connect your appliance to a mobile device quickly and easily.

### Setting up the Home Connect® app

1. Install the Home Connect® app on your mobile device.
2. Start the Home Connect® app and set up access for Home Connect®.

   The Home Connect® app guides you through the entire registration process.

### Setting up Home Connect®

**Requirements**

- The Home Connect® app is installed on your mobile device.
- The appliance receives signals from the WLAN home network (Wi-Fi) at its installation location.
- The appliance door is closed.

1. Open the Home Connect® app and scan the following QR code.

2. Follow the instructions in the Home Connect® app.

## 15.2 Home Connect® settings

Adapt Home Connect® to your needs.
You can find the Home Connect® settings in the basic settings for your appliance. Which settings the display shows will depend on whether Home Connect® has been set up and whether the appliance is connected to your home network.

## 15.3 Remote Start

You can use the Home Connect® app to start the appliance with your mobile device.

**Tip:** If you select "rc:02" in the Basic settings → *Page 23* of this function, the function is permanently activated, and you can start your appliance with a mobile device at any time.

### Activating Remote Start

When you have selected "rc:01" in the basic settings of this function, activate the function on your appliance.

**Requirements**

- The appliance is connected to your WLAN home network.
- The appliance is connected to the Home Connect® app.
- "rc:01" is selected in the Basic settings → *Page 23* of this function.
- A program is selected.

▸ Press remote start.

If you open the appliance door, the function is automatically deactivated.

✔ remote start button lights up.

**Tip:** To deactivate the function, press remote start.

## 15.4 Remote Diagnostics

The Customer Service can access your appliance via Remote Diagnostics if you ask them to do so, if your appliance is connected to the Home Connect® server and if Remote Diagnostics is available in the country where you are using the appliance.

**Tip:** Further information and details about the availability of Remote Diagnostics in your country can be found in the Service/Support section of your local website: www.home-connect.com.

## 15.5 Software update

You can use this function to update the software of your appliance, e.g. for optimization, troubleshooting or safety-relevant updates.
The Home Connect® app informs you about available software updates.

## 15.6 Data Protection

Please see the information on data protection.
The first time your appliance is registered on a home network connected to the Internet, your appliance will transmit the following types of data to the Home Connect® server (initial registration):

- Unique appliance identification (consisting of appliance codes as well as the MAC address of the installed Wi-Fi communication module).
- Security certificate of the Wi-Fi communication module (to ensure a secure data connection).

[1] Wi-Fi is a registered trade mark of the Wi-Fi Alliance.

- The current software and hardware version of your appliance.
- Status of any previous reset to factory settings.

This initial registration prepares the Home Connect® functions for use and is only required when you want to use the Home Connect® functions for the first time.

**Note:** Please note that the Home Connect® functions can be utilized only with the Home Connect® app. Information on data protection can be called up in the Home Connect® app.

# 16 Cleaning and maintenance

To keep your appliance working efficiently for a long time, it is important to clean and maintain it carefully.

## 16.1 Cleaning the tub

**WARNING**

Using detergents containing chlorine may result in harm to health.

- Never use detergents containing chlorine.

1. Remove any heavy soiling in the interior with a damp cloth.
2. Add detergent to the detergent dispenser.
3. Select the program with the highest temperature.
4. Start the program without dishware. → *Page 21*

## 16.2 Cleaning agent

Only use suitable cleaning agents to clean your appliance. → *"Preventing material damage", Page 6*

## 16.3 Tips on appliance care

Follow the tips on appliance care to make sure your appliance functions properly at all times.

| Action | Benefit |
|---|---|
| Regularly wipe the door seals, the front of the dishwasher and the control panel using a damp cloth and dishwashing liquid. | This ensures the parts of the appliance will remain clean and hygienic. |
| If the appliance is not going to be used for a while, leave the door slightly ajar. | This will prevent unpleasant odors. |

## 16.4 Filter system

The filter system removes coarse soiling from the dishwashing cycle.

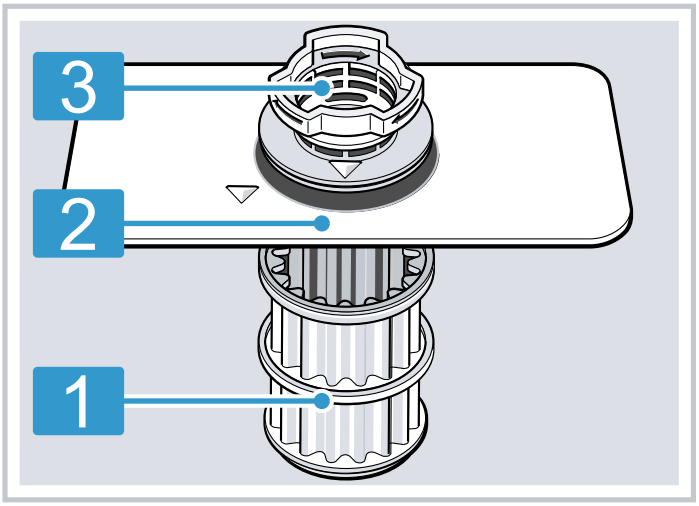


| | |
|---|---|
| 1 | Micro filter |
| 2 | Fine filter |
| 3 | Coarse filter |

### Cleaning filters

Debris in the dishwashing water may block the filters.

1. Check the filters for residue after each wash.
2. Rotate the spray arm to the side, out of the way of the filter.
3. Turn the coarse filter counterclockwise ① and remove the filter system ②. Make sure that no foreign objects fall into the sump.

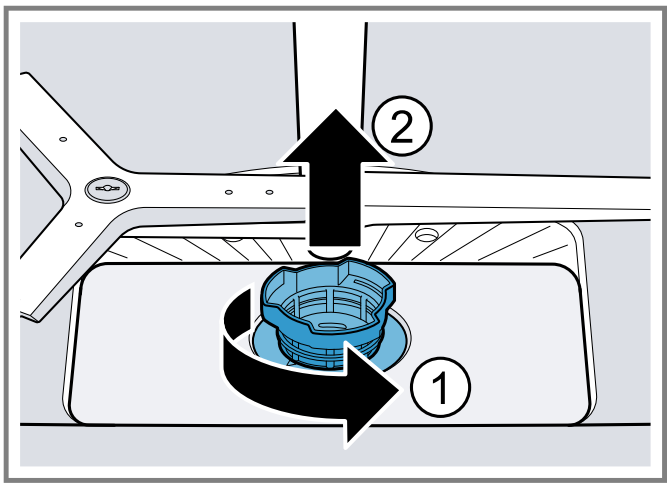

4. Pull down the micro filter to remove.

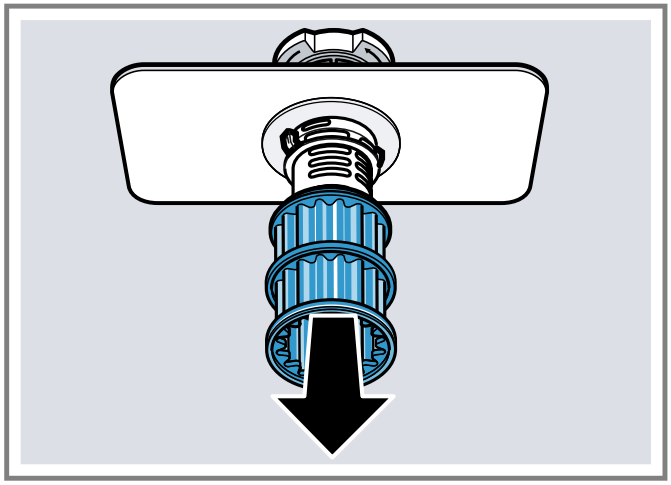

5. Press the locking catches together ①and lift the coarse filter out ②.

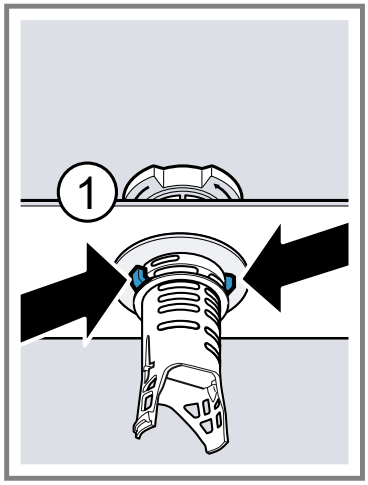


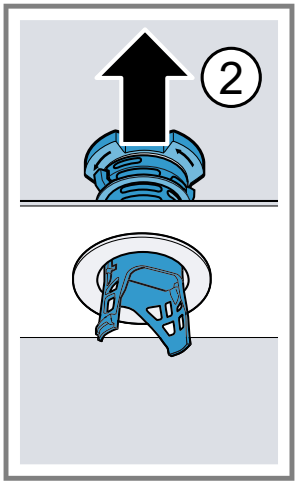


6. Clean the filter elements under running water.

   Carefully clean the rim of dirt between the coarse and fine filter.

7. Reassemble the filter system.

   Make sure that the locking catches on the coarse filter click into position.

8. Insert the filter system into the appliance and turn the coarse filter clockwise.

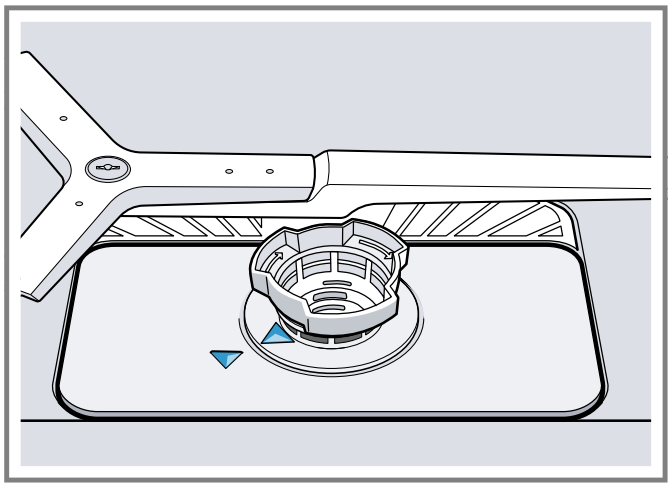

   Make sure that the arrow markings match up.

9. The spray arm will automatically return to the correct position when starting, so it's not necessary to reposition the spray arm to the front.

## 16.5 Cleaning spray arms

Limescale and debris in the dishwashing water may block the nozzles and bearings on the spray arms. Clean the spray arms regularly.

1. Unscrew the upper spray arm ① and pull down to remove ②.

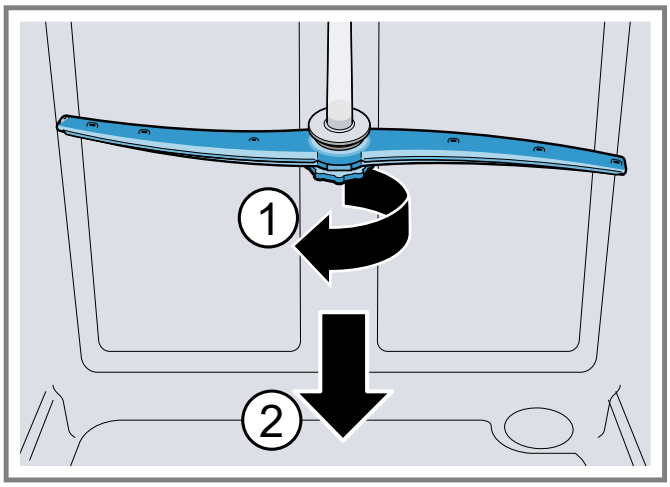


2. Check that the lower spray arm is at the 6 o'clock position.

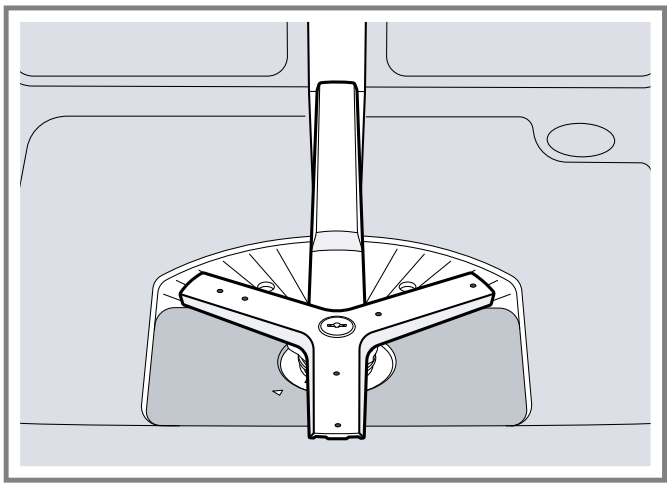

3. Hold the spray arm in the center and lift straight up to remove.

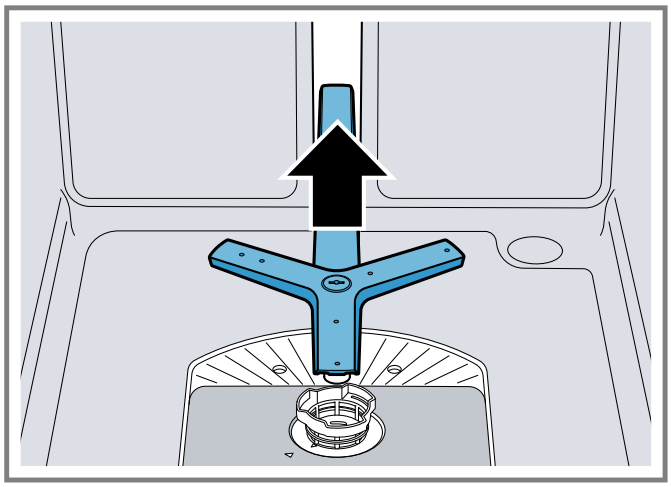

4. Check the outlet nozzles on the spray arms for blockages under running water and remove any foreign objects.
5. Reinsert the lower spray arm by first setting it in the 6 o'clock position, then push down until it clicks.
6. Insert the upper spray arm and screw firmly in place.

# 17 Troubleshooting

You can eliminate minor issues on your appliance yourself. Please read the information on eliminating issues before contacting Customer Service. This may avoid unnecessary repair costs.

| Issue | Cause and troubleshooting |
|---|---|
| E:20-60 lights up alternately. | Appliance has detected that the heating element is calcified.<br>1. Descale the appliance.<br>2. Operate the appliance with the Water softening system.[1] |
| E:21-30 lights up alternately. | Intake opening of Zeolith container is covered by items of dishware.<br>▸ Rearrange the dishware in the appliance so the Intake opening of the Zeolith container → *Page 7* is no longer obstructed. |
| E:30-00 lights up alternately. | Water protection system is activated.<br>1. Turn off the water faucet.<br>2. Call customer service → *Page 38*. |
| E:31-00 lights up alternately. | Water protection system is activated.<br>1. Turn off the water faucet.<br>2. Call customer service → *Page 38*. |
| E:32-00 lights up alternately or indicator for water supply lights up. | Inlet hose is kinked.<br>▸ Install the inlet hose without kinks. |
| | Water faucet is turned off.<br>▸ Turn on the faucet. |
| | Water faucet is clogged or calcified.<br>▸ Turn on the faucet.<br>The flow rate must be at least 10 l/min when the water supply is open. |
| | Filters in the water connection of the supply or AquaStop hose are blocked.<br>1. Switch off the appliance.<br>2. Pull out the power cord plug.<br>3. Turn off the water faucet.<br>4. Unscrew the water connection.<br>5. Remove the filter from the supply hose.<br> 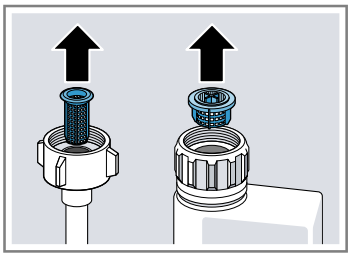 <br>6. Clean the filter.<br>7. Reinsert the filter in the supply hose.<br>8. Screw the water connection back on.<br>9. Check the water connection for leaks.<br>10. Restore the power supply.<br>11. Switch the appliance on. |
| E:34-00 lights up alternately. | Water is continuously running into the appliance.<br>1. Turn off the water faucet.<br>2. Call customer service → *Page 38*. |

[1] Depending on the appliance specifications

| Issue | Cause and troubleshooting |
|---|---|
| E:61-02 lights up alternately. | Not an appliance error. The drain pump cover is loose or a foreign object is blocking the pump.<br>▸ Secure the cover of the drain pump so it clicks into place or clean the drain pump. |
| E:61-03 lights up alternately.<br>Water is not draining. | Not an appliance error. Garbage disposal is still plugged or the drain hose is kinked.<br>▸ Check that the garbage disposal plug is removed and that the drain hose is not kinked. |
| | Not an appliance error. The drain pump cover is loose or a foreign object is blocking the pump.<br>▸ Secure the cover of the drain pump so it clicks into place or clean the drain pump. |
| | Not an appliance error. High loop is missing and/or debris flushed back into drain hose and blocked it.<br>▸ Be sure there is a high loop in the drain hose and that no debris has flushed back into the hose. |
| E:61-60 lights up alternately. | There is a technical error.<br>▸ Contact the after-sales service.<br>→ *"Customer Service", Page 38* |
| E:90-01 lights up alternately. | Power voltage is too low.<br>There is no problem with the appliance.<br>1. Call an electrician.<br>2. Have the power voltage and electrical installation checked by an electrician. |

| Issue | Cause and troubleshooting |
|---|---|
| E:92-10 lights up alternately. | Spray arm rotation of the lower spray arm is blocked.<br>▸ Arrange the dishware so that it does not obstruct spray arm rotation of the lower spray arm. |
| | Lower spray arm is not correctly fitted.<br>▸ Fit the lower spray arm correctly. |
| E:92-40 lights up alternately. | Filters are soiled or blocked.<br>▸ Clean the filters.<br>→ *"Cleaning filters", Page 25* |
| A different error code appears in the display window.<br>E:01-00 to E:90-10 | There is a technical issue.<br>1. Press ON/OFF.<br>2. Pull out the power cord plug of the appliance or switch off the breaker.<br>3. Wait at least 2 minutes.<br>4. Insert the power cord plug of the appliance in a power outlet or switch on the breaker.<br>5. Switch the appliance on.<br>6. If the problem occurs again:<br>– Press ON/OFF.<br>– Turn off the water faucet.<br>– Pull out the power cord plug.<br>– Contact customer service → *Page 38* and give the error code. |
| Dishware is not dry. | No rinse aid used or dosage set too low.<br>1. Add Rinse aid → *Page 16*.<br>2. Set the amount of rinse aid to be dispensed.<br>→ *"Setting the amount of rinse aid", Page 16* |
| | Cycle or cycle option has no drying phase, or drying phase is too short.<br>▸ Select a wash cycle with drying. → *Page 10*<br>Some option buttons decrease the drying result. |
| | Water collects in recesses of dishware or silverware. |

| Issue | Cause and troubleshooting |
|---|---|
| Dishware is not dry. | ▸ Position dishware at an angle where possible.<br> 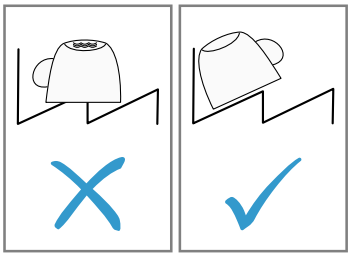 |
| | The combined detergent used has a poor drying performance.<br>**1.** Use rinse aid to improve drying performance.<br>**2.** Use a different combined detergent with a better drying performance. |
| | Extra Dry/intensive drying not activated to improve drying performance.<br>▸ Activate Extra Dry/intensive drying. |
| | Dishware removed too early or drying process not yet ended.<br>**1.** Wait until the program ends.<br>**2.** Only remove dishware 30 minutes after the program has ended. |
| | Rinse aid used has a limited drying performance.<br>▸ Use a name-brand rinse aid.<br>Eco products may have limited effectiveness. |
| Silverware is not dry. | Silverware not arranged properly in the silverware basket or silverware drawer. Droplets can form on the contact points of silverware.<br>**1.** Arrange silverware individually where possible. → *Page 19*<br>**2.** Avoid points of contact. |
| Appliance interior still wet after wash cycle. | Not an error. Condensation drying creates water droplets in the tub. This is normal. Moisture in the air condenses on the inside walls of the appliance, runs off, and is pumped out.<br>No action required. |
| Food remnants are left on dishware in the upper rack. | Dishware in the upper rack was placed too close together or upper rack is overfilled.<br>▸ Arrange dishware in the upper rack with sufficient space in between. Position large items of dishware at an angle, e.g. pans and ovenproof dishes. |
| Food remnants on dishware. | Dishware was placed too close together or rack is overfilled.<br>**1.** Arrange dishware with sufficient space in between.<br>The spray jets must reach the surfaces of the dishware.<br>**2.** Avoid points of contact. |
| | Spray arm rotation of the lower spray arm is blocked.<br>▸ Arrange dishware so it does not obstruct spray arm rotation. |
| | Spray arm nozzles are blocked.<br>▸ Clean the Spray arms. |
| | Filters are dirty.<br>▸ Clean the filters.<br>→ *"Cleaning filters", Page 25* |
| | Filters are inserted incorrectly and/or not engaged.<br>**1.** Insert the filters properly.<br>→ *"Filter system", Page 25*<br>**2.** Twist filters into place. |
| | Selected wash cycle is too light.<br>▸ Select a more intensive wash program.<br>▸ Adjust the sensitivity of the sensors.<br>→ *"Sensors", Page 6* |

| Issue | Cause and troubleshooting |
|---|---|
| Food remnants on dishware. | Dishware has been precleaned too intensively. Then the sensors choose a lighter cycle. Stubborn remnants cannot be entirely removed.<br>▸ Only remove large remnants of food and do not pre-rinse dishware.<br>▸ Adjust the sensitivity of the sensors.<br>→ *"Sensors", Page 6* |
| | Tall narrow containers in corner areas are not rinsed out adequately.<br>▸ Do not position tall narrow containers at too great an angle or in corner areas. |
| | Upper rack on right and left not set to same height.<br>▸ Set the upper rack on the left and right to the same height.<br>→ *"Upper rack", Page 12* |
| Detergent residue in the appliance | Lid of the detergent dispenser is blocked by items of dishware and will not open.<br>**1.** Arrange dishware in the upper rack so the tab collecting tray is not obstructed by dishware.<br>→ *"Loading dishware", Page 19*<br>Items of dishware are blocking the dispenser lid.<br>**2.** Do not place dishware or fragrance dispensers in the tab collecting tray. |
| | The lid of the detergent dispenser is blocked by the tab and will not open.<br>▸ Position the tab in the detergent dispenser crosswise, not vertically. |
| | Tabs are used in the quick or short cycle. There is not enough time for the tab to dissolve.<br>▸ Select a more intensive Wash cycle or use Powder detergent. |
| | Detergent may lose its cleaning or dissolving ability after being stored a long time, or the detergent is clumped together.<br>▸ Change your Detergent. |
| Water spots on plastic parts. | Droplet formation on plastic surfaces is unavoidable due to the laws of physics. Water spots are visible after drying.<br>▸ Select a more intensive program.<br>▸ Position dishware at an angle.<br>→ *"Loading dishware", Page 19*<br>▸ Use rinse aid.<br>→ *"Rinse aid", Page 16*<br>▸ Set the water softening system higher.<br>→ *"Setting the water softening system", Page 15* |
| Wipeable or water-soluble coatings inside the appliance or on the door. | There is detergent residue. These coatings cannot generally be removed with chemicals.<br>▸ Change your Detergent.<br>▸ Scrub the appliance by hand. |
| | White coating is deposited inside the appliance.<br>**1.** Adjust the water softening system correctly.<br>→ *"Setting the water softening system", Page 15*<br>In most cases you will need to increase the setting.<br>**2.** If necessary, change your detergent. |
| | Special salt dispenser is not screwed tight.<br>▸ Screw the special salt dispenser tight. |
| There are stubborn white coatings on the dishware, inside the appliance or on the door. | There is detergent residue. These coatings cannot generally be removed with chemicals.<br>▸ Change your Detergent.<br>▸ Scrub the appliance by hand. |
| | Hardness range is set incorrectly or the water hardness is too high. |

| Issue | Cause and troubleshooting |
|---|---|
| There are stubborn white coatings on the dishware, inside the appliance or on the door. | ▸ Set the Water softening system to the water hardness or add special salt. |
| | 3in1/organic/eco detergent is not effective enough.<br>▸ Set the Water softening system to the water hardness and use separate detergents (name brand, special salt, rinse aid). |
| | Too little detergent is being used.<br>▸ Increase the amount of detergent used or change Detergent . |
| | Selected wash cycle is too light.<br>▸ Select a more intensive wash program.<br>▸ Adjust the sensitivity of the sensors.<br>→ *"Sensors", Page 6* |
| Tea residue or lipstick marks on dishware. | Dishwashing temperature is too low.<br>▸ Select a program with a higher dishwashing temperature. |
| | Too little detergent is being used or is unsuitable.<br>▸ Use a suitable Detergent and follow the manufacturer's instructions for the amount to be used. |
| | Dishware has been precleaned too intensively. Then the sensors choose a lighter cycle. Stubborn remnants cannot be entirely removed.<br>▸ Only remove large remnants of food and do not pre-rinse dishware.<br>▸ Adjust the sensitivity of the sensors.<br>→ *"Sensors", Page 6* |
| There are colored coatings (blue, yellow, brown) inside the appliance or on stainless steel dishware that are difficult or impossible to remove. | The formation of films is due to substances contained in vegetables (cabbage, celery, potatoes, noodles, etc.) or tap water (manganese).<br>▸ Clean the appliance.<br>You can remove coatings with Mechanical cleaning → *Page 25* or a machine cleaning product. It may not always be possible to completely remove coatings but they are harmless to health. |
| | The formation of films is due to metal components on silver or aluminum dishware.<br>▸ Clean the appliance.<br>You can remove coatings with Mechanical cleaning → *Page 25* or a machine cleaning product. It may not always be possible to completely remove coatings but they are harmless to health. |
| There are colored deposits (yellow, orange, brown) that are ey to remove inside the appliance (mainly at the bottom). | The formation of films is due to ingredients of food remnants and tap water (limescale), "soaplike".<br>1. Check the setting of the water softening system.<br>→ *"Setting the water softening system", Page 15*<br>2. Add special salt.<br>3. If you are using combined detergents (tabs), activate the water softening system.<br>Follow the information on detergents. |
| Plastic parts inside the appliance are discolored. | Plastic parts inside the appliance may become discolored over the life of the dishwasher.<br>▸ Discoloration may come about and will not impair functioning of the appliance. |
| Plastic parts are discolored. | Dishwashing temperature is too low.<br>▸ Select a program with a higher dishwashing temperature. |
| | Dishware has been precleaned too intensively. Then the sensors choose a lighter cycle. Stubborn remnants cannot be entirely removed.<br>▸ Only remove large remnants of food and do not pre-rinse dishware.<br>▸ Adjust the sensitivity of the sensors.<br>→ *"Sensors", Page 6* |

| Issue | Cause and troubleshooting |
|---|---|
| There are removable streaks on glasses, glassware with a metallic appearance and silverware. | Amount of rinse aid to be dispensed is set too high.<br>▸ Set the rinse aid system to a lower setting.<br>→ *"Setting the amount of rinse aid", Page 16* |
| | No rinse aid has been added.<br>▸ Add rinse aid.<br>→ *"Adding rinse aid", Page 16* |
| | There is detergent residue in the final rinse. Lid of detergent dispenser is blocked by dishware and will not open fully.<br>1. Arrange dishware in the upper rack so the tab collecting tray is not obstructed by dishware.<br>→ *"Loading dishware", Page 19*<br>Items of dishware are blocking the dispenser lid.<br>2. Do not place dishware or fragrance dispensers in the tab collecting tray. |
| | Dishware has been precleaned too intensively. Then the sensors choose a lighter cycle. Stubborn remnants cannot be entirely removed.<br>▸ Only remove large remnants of food and do not pre-rinse dishware.<br>▸ Adjust the sensitivity of the sensors.<br>→ *"Sensors", Page 6* |
| Irreversible clouding of glassware. | Glasses are not dishwasher-proof, only suitable for dishwashers.<br>▸ Use dishwasher-proof glasses.<br>Glasses are usually only suitable for cleaning in a dishwasher, i.e. long-term wear or long-term changes must be expected.<br>▸ Avoid a lengthy steam phase (standing time after wash cycle ends).<br>▸ Use a program with a lower temperature.<br>▸ Set the softening system to the water hardness.<br>→ *"Setting the water softening system", Page 15*<br>▸ Use detergent with a glass protection component. |
| Detergent residue is present in the detergent dispenser or the tab collecting tray. | Spray arms were blocked by dishware so detergent was not rinsed out.<br>▸ Check that the spray arms are not blocked and can rotate freely. |
| | Detergent dispenser was damp when detergent was added.<br>▸ Only add detergent to the detergent dispenser when dry. |
| Excessive formation of foam occurs. | Hand soap got in the rinse aid dispenser.<br>▸ Immediately add rinse aid to the dispenser.<br>→ *"Adding rinse aid", Page 16* |
| | Rinse aid has been spilled.<br>▸ Remove the rinse aid with a cloth. |
| | Detergent or machine care product used causes excessive foaming.<br>▸ Change the brand of detergent. |
| Connection to home network is not established. | WLAN on router is not active.<br>▸ Check the wireless network connection of your router. |
| WLAN display is flashing. | Connection to home network is not available.<br>▸ Activate the wireless network connection on your router. |
| Home Connect cannot be implemented correctly. | Home Connect set incorrectly.<br>▸ Please consult the documents supplied for Home Connect®. |
| | There is a technical error.<br>▸ Please consult the information on support in the documents supplied for Home Connect®. |
| Special salt refill indicator lights up. | Insufficient special salt.<br>▸ Add Special salt. |

| Issue | Cause and troubleshooting |
|---|---|
| Special salt refill indicator lights up. | Sensor does not detect special salt tablets.<br>▸ Do not use special salt tablets. |
| Refill indicator for special salt does not light up. | Water softening system is switched off.<br>▸ Set the water softening system.<br>→ *"Setting the water softening system", Page 15* |
| Refill indicator for rinse aid lights up. | No rinse aid.<br>1. Add Rinse aid → *Page 16*.<br>2. Set the amount of rinse aid to be dispensed.<br>→ *"Setting the amount of rinse aid", Page 16* |
| Refill indicator for rinse aid does not light up. | Rinse aid system is switched off.<br>▸ Set the amount of rinse aid.<br>→ *"Setting the amount of rinse aid", Page 16* |
| All LEDs light up or flash. | Electronics have detected a fault.<br>1. Press the main switch button for approx. 4 seconds.<br>→ *"Controls", Page 8*<br>The appliance is reset and restarted.<br>2. If the problem occurs again:<br>– Switch off the appliance.<br>– Unplug the power plug or switch off the circuit breaker in the fuse box.<br>– Wait at least 2 minutes.<br>– Switch on the circuit breaker in the fuse box or plug in the power plug.<br>– Switch on the appliance.<br>3. If the problem occurs again:<br>– Contact customer service.<br>→ *"Customer Service", Page 38* |
| UP appears on the display. | A software update is available.<br>▸ Press the remote start button to install the software update.<br>✔ After a successful software update, "Suc" appears on the display for a few seconds. |
| Water is left in the appliance at the end of the program. | Filter system or area under the filters is blocked.<br>1. Clean the Filters → *Page 25*.<br>2. Clean the Drain pump → *Page 36*. |
| | Program has not yet ended.<br>▸ Wait until the program ends or terminate the program with **Reset**.<br>▸ → *"Terminating the wash cycle", Page 21* |
| Appliance cannot be switched on or operated. | Software update is taking place.<br>▸ Wait until the software update has finished. |
| | Appliance functions have failed.<br>1. Pull out the power cord plug or switch off the breaker.<br>2. Wait at least 2 minutes.<br>3. Connect the appliance to the power supply.<br>4. Switch the appliance on. |
| Appliance does not start. | The breaker has tripped.<br>▸ Check the relevant breaker. |
| | Power cord is not inserted.<br>1. Check whether the power outlet is working.<br>2. Check whether the power cord plug is properly inserted in the power outlet and on the rear of the appliance. |
| | Appliance door is not closed properly. |

| Issue | Cause and troubleshooting |
|---|---|
| Appliance does not start. | ▸ Close the appliance door. |
| Wash cycle starts up automatically. | You did not wait until the cycle ended.<br>▸ → *"Terminating the wash cycle", Page 21* |
| Appliance stops during the cycle or cuts out. | Appliance door is not closed properly.<br>▸ Close the appliance door. |
| | Power and/or water supply has been interrupted.<br>1. Check the power supply.<br>2. Check the water supply. |
| | Upper rack is pressing against inner door and preventing appliance door from being closed securely.<br>▸ Check whether the rear panel of the appliance is being pressed in by a power outlet or a hose holder that has not been removed.<br>▸ Arrange the dishware so that no parts project beyond the rack and prevent the appliance door from closing properly. |
| Appliance door cannot be closed. | Door lock has been activated.<br>▸ Close the appliance door with greater force. |
| | Door cannot be closed due to installation method.<br>▸ Check whether the appliance has been installed properly.<br>When closed, the appliance door, its decor or attached parts should not knock against adjacent cabinets or the worktop. |
| Lid on the detergent dispenser cannot be closed. | Detergent dispenser or lid are blocked by sticky detergent residue.<br>▸ Remove detergent residue. |
| Filling valves making knocking noises. | Caused by the domestic installation. No fault present in the appliance. Does not affect functioning of the appliance.<br>▸ Can only be remedied in the home installation. |
| Noise level varies | The noise level can vary, depending on what kind of dishes are loaded and where they are placed.<br>▸ Make sure the dishware is loaded in the most secure way, resting on the tines and not hitting each other.<br>→ *"Loading dishware", Page 19* |
| | Spray arm is striking dishes.<br>▸ Arrange dishware so the spray arms do not strike dishware. |
| | With a small load the water jets directly strike against the tub.<br>▸ Distribute the dishware evenly.<br>▸ Load the appliance with more dishware. |
| | Light items of dishware move about during the wash cycle.<br>▸ Position light items of dishware securely. |

## 17.1 Clean drain pump

Large food remnants or foreign objects can block the drain pump. As soon as the dishwashing water no longer drains properly, the drain pump must be cleaned.

**⚠ CAUTION**

There may be some sharp debris, such as glass fragments, blocking the drain pump.

▸ Use caution when removing parts for cleaning.

1. Disconnect the appliance from the power supply.
2. Remove the upper and lower rack.
3. Remove the filter system.
4. Scoop out any water.
   Use a sponge if necessary.

5. Pry the pump cover off using a spoon and grip it by the crosspiece.

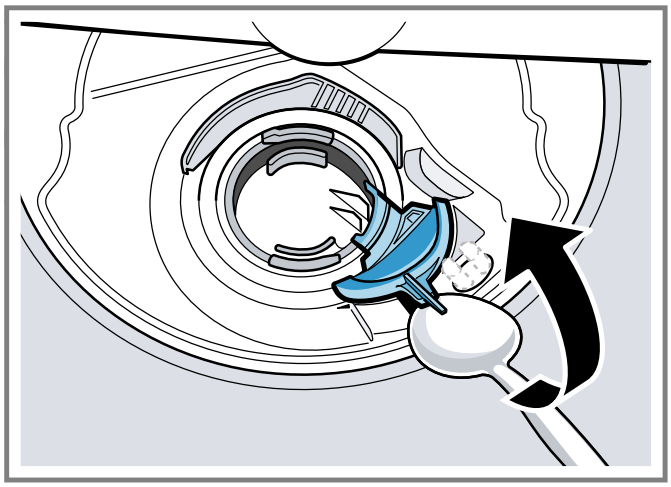

6. Lift the pump cover diagonally inward and take it out.
✔ Now you can reach the impeller with your hand.
7. Remove any food remnants or foreign objects in the area of the impeller.
8. Insert the pump cover ① and press down ②.

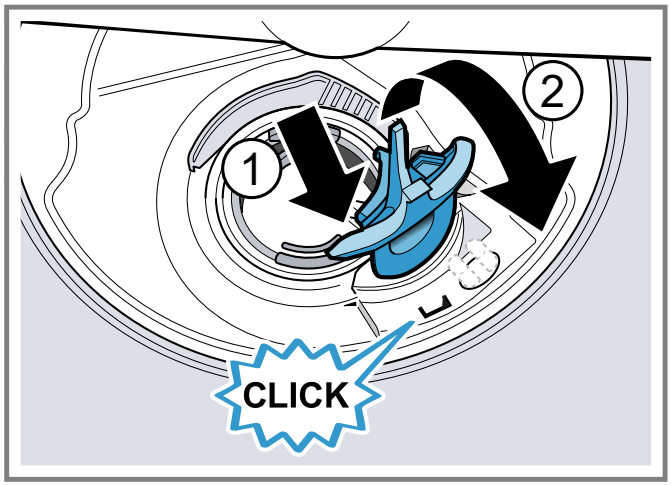


✔ The pump cover clicks into position.
9. Install the filter system.
10. Insert the upper and lower rack.

# 18 Transportation, storage and disposal

## 18.1 Removing the appliance

1. Disconnect the appliance from the power supply.
2. Turn off the water faucet.
3. Detach the drain connection.
4. Detach the water connection.
5. Loosen any screws fastening the appliance to cabinet parts.
6. Remove the base panel if fitted.
7. Pull the appliance out carefully, along with the hose behind it.

## 18.2 Vacation and Storage

***NOTICE:***

Preparing your unit for vacation

- Before leaving for vacation during warmer weather, besides turning off the main valve, also turn off water supply at the nearest point to the dishwasher. During colder weather, please follow the instructions for winterizing your unit below.

Winterizing your unit

- If your dishwasher will be unused for an extended period of time in a location that experiences freezing temperatures (vacation home or through a vacation period), have your dishwasher winterized by an authorized service provider.

## 18.3 Transporting the appliance

To avoid damage to the appliance, empty it before transporting.

**Note:** Always transport the dishwasher upright to prevent residual water getting into the machine's controls and damaging the appliance.

1. Remove dishware from the appliance.
2. Secure loose parts.
3. Turn the water faucet on.
4. Switch on the appliance.
5. Select the cycle with the highest temperature.
6. Start the cycle. → *Page 21*
7. To drain the appliance, terminate the cycle after approx. 4 minutes.
   → *"Terminating the wash cycle", Page 21*
8. Switch off the appliance.
9. Turn off the water faucet.
10. To empty the residual water out of the appliance, detach the supply hose and let the water drain out.

## 18.4 Disposal of your old appliance

Environmentally sound disposal allows valuable raw materials to be recycled.

⚠ **WARNING**

Avoid a risk of entrapment upon disposal.

- Unplug the appliance from the power outlet.
- Cut the power cord and remove the door upon discarding the appliance.

- Check your local area for large appliance recycling programs.

# 19 Customer Service

With any warranty repair, we will make sure your appliance is repaired by an authorized service provider using genuine replacement parts. We use only genuine replacement parts for all repairs.
Detailed information on the warranty period and terms of warranty can be found in the Statement of Limited Product Warranty, from your retailer, or on our website.
If you contact Customer Service, you will need the model number (E-Nr.), the production number (FD) and the consecutive numbering (Z-Nr.) of your appliance.
USA:
1-800-944-2904
www.bosch-home.com/us/owner-support/get-support
www.bosch-home.com/us/shop
CA:
1-800-944-2904
www.bosch-home.ca/en/service/get-support
www.bosch-home.ca/en/service/cleaners-and-accessories
For assistance with connecting to Home Connect®, you can also view instructions here:
www.home-connect.com/us/en/help-support/set-up

## 19.1 Model number (E-Nr.), production number (FD) and consecutive numbering (Z-Nr.)

You can find the model number (E-Nr.), the production number (FD) and the consecutive numbering (Z-Nr.) on the appliance's rating plate.
The rating plate is located inside the appliance door.
Making a note of your appliance's details and the Customer Service telephone number will enable you to find them again quickly.

# 20 Technical specifications

| | |
|---|---|
| Weight | Max.: 60 kg/132 lbs |
| Voltage | 120 V, 60 Hz |
| Power rating | 1440 W |
| Fuse | 12 A |
| Water pressure | ■ Min. 7.25 psi (50 kPa)<br>■ Max. 145 psi (1000 kPa) |
| Inlet rate | Min. 2.6 gal/min |
| Water temperature | Cold water.<br>Hot water max.: 140 °F/ (60 °C) |
| Load capacity | 16 place settings |

## 20.1 Information regarding Free and Open Source Software

This product includes software components that are licensed by the copyright holders as free or open source software.
The applicable license information is stored on your home appliance. You can also access the applicable license information via your Home Connect® app: "Profile -> Legal information -> License Information".[1] You can download the license information on the brand product website. (Please search on the product website for your appliance model and additional documents). Alternatively, you can request the relevant information from ossrequest@bshg.com or BSH Hausgeräte GmbH, Carl-Wery-Str. 34, 81739 Munich, Germany.
The source code will be made available to you on request. Please send your request to ossrequest@bshg.com or BSH Hausgeräte GmbH, Carl-Wery-Str.34, 81739 Munich, Germany.
Subject: „OSSREQUEST“
The cost of performing your request will be charged to you. This offer is valid for three years from the date of purchase or at least as long as we offer support and spare parts for the relevant appliance.

# 21 STATEMENT OF LIMITED PRODUCT WARRANTY

## 21.1 What this warranty covers & Who it applies to

The limited warranty provided by BSH Home Appliances (“Bosch“) in this Statement of Limited Product Warranty applies only to the Bosch appliance sold to you (“Product“), provided that the Product was purchased:

- For your normal, household (non-commercial) use, and has in fact at all times only been used for normal household purposes.
- New at retail from a BSH authorized dealer or directly from BSH (not a display, "as is", or previously returned model), and not for resale, or commercial use.
- Within the United States or Canada, and has at all times remained within the country of original purchase.

The warranties stated herein apply to the original purchaser of the product warranted herein and to each succeeding owner of the product purchased for ordinary home use during the term of the warranty.
Please make sure to register your Product; while not necessary to effectuate warranty coverage, it is the best way for Bosch to notify you in the unlikely event of a safety notice or product recall.

## 21.2 How long the warranty lasts

Bosch warrants that the Product is free from defects in materials and workmanship for a period of three hundred and sixty-five (365) days from the date of the original delivery. The foregoing timeline begins to run upon the date of the original delivery, and shall not be stalled, tolled, extended, or suspended, for any reason whatsoever. This Product is also warranted to be free from **cosmetic** defects in material and workmanship (such as scratches of stainless steel, paint/porcelain blemishes, chips, dents, or other damage to the finish) of the Product, for a period of thirty (30) days from the date of delivery or closing date for new construction. This **cosmetic** warranty excludes slight color variations due to inherent differences in painted and porcelain parts, as well as differences caused by kitchen lighting, product location, or other similar factors. This **cosmetic** warranty specifically excludes any display, floor, “As Is”, or “B” stock appliances.

## 21.3 Extended Warranty

BSH also provides these additional limited warranties:

- 5 year limited warranty on electronics: BSH will repair or replace any BSH microprocessor or printed circuit board if it proves to be defective in materials or workmanship (excludes labor charges).

[1] Depending on the appliance specifications

- 5 year limited warranty on dish racks: BSH will replace the upper or lower dish rack (excluding rack components), if the rack proves defective in materials or workmanship (excludes labor charges).
- Lifetime warranty against stainless steel rust through: BSH will repair or replace your dishwasher with the same model or a current model that is substantially equivalent or better in functionality, if the inner liner should rust through (excludes labor charges).
- BSH will repair or replace the stainless steel door if the door should rust through (excludes labor charges).

## 21.4 Repair/replace as your exclusive remedy

During this warranty period, Bosch or one of its authorized service providers will repair your Product without charge to you (subject to certain limitations stated herein) if your Product proves to have been manufactured with a defect in materials or workmanship. If reasonable attempts to repair the Product have been made without success, then Bosch will replace your Product (upgraded models may be available to you, in Bosch's sole discretion, for an additional charge). Nothing in this warranty requires damaged or defective parts to be replaced with parts of a different type or design than the original part. All removed parts and components shall become the property of Bosch at its sole option. All replaced and/or repaired parts shall assume the identity of the original part for purposes of this warranty and this warranty shall not be extended with respect to such parts. Bosch's sole liability and responsibility hereunder is to repair manufacturer-defective Product only, using a Bosch authorized service provider during normal business hours. For safety and property damage concerns, Bosch highly recommends that you do not attempt to repair the Product yourself, or use a non-authorized service provider; Bosch will have no responsibility or liability for damage resulting from repairs or work performed by a non-authorized service provider. Authorized service providers are those persons or companies that have been specially trained on Bosch products, and who possess, in Bosch's opinion, a superior reputation for customer service and technical ability (note that they are independent entities and are not agents, partners, affiliates or representatives of Bosch). Nevertheless, taking your product to be serviced by a repair shop that is not affiliated with or an authorized dealer of Bosch will not void this warranty. Also, using third-party parts will not void this warranty. Notwithstanding the foregoing, Bosch will not incur any liability, or have responsibility, for the Product if it is located in a remote area (more than 100 miles from an authorized service provider) or is reasonably inaccessible, hazardous, threatening, or treacherous locale, surroundings, or environment; in any such event, if you request, Bosch would still pay for labor and parts and ship the parts to the nearest authorized service provider, but you would still be fully liable and responsible for any travel time or other special charges by the service company, assuming they agree to make the service call. Further, to the extent you have installed the Product in a difficult-to-access location or have otherwise installed temporary or permanent fixtures that create barriers to accessing or removing the Product, Bosch will not incur any liability for, or have responsibility, for work or costs associated with moving the Product or otherwise creating access to the Product in order to repair or replace it. All such costs shall be your sole responsibility.

## 21.5 Out of warranty product

Bosch is under no obligation, at law or otherwise, to provide you with any concessions, including repairs, prorates, or Product replacement, once this warranty has expired.

## 21.6 Warranty exclusions

The warranty coverage described herein excludes all defects or damage that are not the direct fault of Bosch, including without limitation, one or more of the following:

- Use of the Product in anything other than its normal, customary and intended manner (including without limitation, any form of commercial use, use or storage of an indoor product outdoors, use of the Product in conjunction with air or water-going vessels).
- Any party's willful misconduct, negligence, misuse, abuse, accidents, neglect, improper operation, failure to maintain, improper or negligent installation, tampering, failure to follow operating instructions, mishandling, unauthorized service (including selfperformed "fixing" or exploration of the appliance's internal workings).
- Adjustment, alteration or modification of any kind.
- A failure to comply with any applicable state, local, city, or county electrical, plumbing and/or building codes, regulations, or laws, including failure to install the product in strict conformity with local fire and building codes and regulations.
- Ordinary wear and tear, spills of food, liquid, grease accumulations, or other substances that accumulate on, in, or around the Product.
- Any external, elemental and/or environmental forces and factors, including without limitation, rain, wind, sand, floods, fires, mud slides, freezing temperatures, excessive moisture or extended exposure to humidity, lightning, power surges, structural failures surrounding the appliance, and acts of God.
- Service calls to correct the installation of your Product, to instruct you how to use your Product, to replace house fuses or correct house wiring or plumbing.
- Removal and replacement of trim or decorative panels that interfere with servicing the Product.
- Damage or defects caused by labor or parts installed by any non-authorized service provider, unless approved by Bosch before service is performed.

In no event shall Bosch have any liability or responsibility whatsoever for damage to surrounding property, including cabinetry, floors, ceilings, and other structures or objects around the Product. Also excluded from this warranty are Products, on which the serial numbers have been altered,

defaced, or removed; service visits to teach you how to use the Product, or visits where there is nothing wrong with the Product; correction of installation problems (you are solely responsible for any structure and setting for the Product, including all electrical, plumbing or other connecting facilities, for proper foundation/flooring, and for any alterations including without limitation cabinetry, walls, floors, shelving, etc.); and resetting of breakers or fuses
TO THE EXTENT ALLOWED BY LAW, THIS WARRANTY SETS OUT YOUR EXCLUSIVE REMEDIES WITH RESPECT TO PRODUCT, WHETHER THE CLAIM ARISES IN CONTRACT OR TORT (INCLUDING STRICT LIABILITY, OR NEGLIGENCE) OR OTHERWISE. THIS WARRANTY IS IN LIEU OF ALL OTHER WARRANTIES, WHETHER EXPRESS OR IMPLIED. ANY WARRANTY IMPLIED BY LAW, WHETHER FOR MERCHANTABILITY OR FITNESS FOR A PARTICULAR PURPOSE, OR OTHERWISE, SHALL BE EFFECTIVE ONLY FOR THE PERIOD THAT THIS EXPRESS LIMITED WARRANTY IS EFFECTIVE. IN NO EVENT WILL THE MANUFACTURER BE LIABLE FOR CONSEQUENTIAL, SPECIAL, INCIDENTAL, INDIRECT, "BUSINESS LOSS", AND/OR PUNITIVE DAMAGES, LOSSES, OR EXPENSES, INCLUDING WITHOUT LIMITATION TIME AWAY FROM WORK, HOTELS AND/OR RESTAURANT MEALS, REMODELLING EXPENSES IN EXCESS OF DIRECT DAMAGES WHICH ARE DEFINITIVELY CAUSED EXCLUSIVELY BY BOSCH, OR OTHERWISE. SOME STATES DO NOT ALLOW THE EXCLUSION OR LIMITATION OF INCIDENTAL OR CONSEQUENTIAL DAMAGES, AND SOME STATES DO NOT ALLOW LIMITATIONS ON HOW LONG AN IMPLIED WARRANTY LASTS, SO THE ABOVE EXCLUSIONS OR LIMITATIONS MAY NOT APPLY TO YOU. THIS WARRANTY GIVES YOU SPECIFIC LEGAL RIGHTS, AND YOU MAY ALSO HAVE OTHER RIGHTS WHICH VARY FROM STATE TO STATE.
No attempt to alter, modify or amend this warranty shall be effective unless authorized in writing by an officer of BSH.

## 21.7 Obtaining warranty service

To obtain warranty service for your product, you should contact Bosch Customer Support at 1-800-944-2904 to schedule a repair.

## 21.8 Product information

For handy reference, copy the information below from the rating plate. Keep your invoice and/or delivery documents for warranty validation.

| | |
|---|---|
| Model number (E-Nr.) | |
| Production number (FD) | |
| Date of delivery | |

## Register your appliance to enjoy customized benefits.

Thank you for being a Bosch customer!
Simply create a MyBosch account, then register your appliance.
You'll find a variety of customized information in MyBosch such as:

- **Discounts for filters, cleaners, accessories & parts**
- **Easy access to manuals & appliance specifications**
- **Easy access to part lists**
- **Customized offer for the Bosch Appliance Service Plan (sent by mail after appliance registration)**

Register here:
**www.bosch-home.com/us/owner-support/mybosch**

## Looking for help? You'll find it here.

No matter what, no matter when: Bosch is here to support you.
We’re here to assist with usage instructions, cleaning tips, accessories & parts, troubleshooting, and repairs.
Find online resources such as FAQs, how-to-videos, manuals, warranties and authorized Bosch servicers at:
**www.bosch-home.com/us/owner-support/get-support**

Contact us:
**Please have your Model Number (E-Nr) ready when contacting us.**
1-800-944-2904
**www.bosch-home.com/us/owner-support/contact-us**

**BSH Home Appliances Corporation**
1901 Main Street, Suite 600
Irvine, CA 92614
USA
www.bosch-home.com
1-800-944-2904
© 2023 BSH Home Appliances Corporation

**9001635047** (030814) 650 A5
en-us