BOSCH

Register your new device on MyBosch now and get free benefits:
bosch-home.com/welcome

MyBosch

Microwave Oven

BFL554MS0 **BFL554MW0** **BFL554MB0** **BFL553MS0** **BFL553M.0**

[en] User manual and installation instructions

Table of contents

INFORMATION FOR USE

1 Safety ... 2
2 Preventing material damage ... 5
3 Environmental protection and saving energy ... 6
4 Familiarising yourself with your appliance ... 7
5 Before using for the first time ... 8
6 Basic operation ... 9
7 Memory ... 10
8 Programmes ... 10
9 Basic settings ... 12
10 Cleaning and servicing ... 12
11 Troubleshooting ... 14
12 Disposal ... 15
13 Customer Service ... 15
14 How it works ... 16

15 INSTALLATION INSTRUCTIONS ... 19
15.1 Safe installation ... 20

⚠ 1 Safety

Observe the following safety instructions.

1.1 General information

- Read this instruction manual carefully.
- Keep the instruction manual and the product information safe for future reference or for the next owner.
- Do not connect the appliance if it has been damaged in transit.

1.2 Intended use

Only a licensed professional may connect appliances without plugs. Damage caused by incorrect connection is not covered under the warranty.
The appliance can only be used safely if it is correctly installed according to the safety instructions. The installer is responsible for ensuring that the appliance works perfectly at its installation location.

Only use this appliance:
- To prepare meals and drinks.
- Under supervision. Never leave the appliance unattended when cooking for short periods.
- For household use and similar applications, such as: In kitchens for employees in shops, offices and other commercial sectors; in agriculture; by customers in hotels and other residential facilities; in bed and breakfasts.
- Up to an altitude of max. 4000 m above sea level.

This appliance complies with the standards EN 55011 and CISPR 11. It is a group 2, class B product. Group 2 means that microwaves are produced for the purpose of heating food. Class B means that the appliance is suitable for private households.

1.3 Restriction on user group

This appliance may be used by children aged 8 or over and by people who have reduced physical, sensory or mental abilities or inadequate experience and/or knowledge, provided that they are supervised or have been instructed on how to use the appliance safely and have understood the resulting dangers.
Do not let children play with the appliance.
Children must not perform cleaning or user maintenance unless they are at least 15 years old and are being supervised.
Keep children under the age of 8 years away from the appliance and power cable.

1.4 Safe use

⚠ WARNING – Risk of fire!

Combustible objects that are left in the cooking compartment may catch fire.
- ▸ Never store combustible objects in the cooking compartment.
- ▸ If smoke is emitted, the appliance must be switched off or the plug must be pulled out and the door must be held closed in order to stifle any flames.

Loose food remnants, fat and meat juices may catch fire.
- ▸ Before using the appliance, remove the worst of the food residues and remnants from the cooking compartment, heating elements and accessories.

Overheating of the appliance may cause a fire.

- Never install the appliance behind a decorative door or unit door.

⚠ WARNING – Risk of burns!

Accessories and cookware get very hot.

- Always use oven gloves to remove accessories or cookware from the cooking compartment.

When the cooking compartment is hot, any alcoholic vapours inside may catch fire.

- Only use small quantities of drinks with a high alcohol content in food.
- Open the appliance door carefully.

⚠ WARNING – Risk of scalding!

The accessible parts of the appliance become hot during operation.

- Never touch these hot parts.
- Keep children at a safe distance.

Hot steam may escape when you open the appliance door. Steam may not be visible, depending on the temperature.

- Open the appliance door carefully.
- Keep children at a safe distance.

If there is water in the cooking compartment when it is hot, this may create hot steam.

- Never pour water into the cooking compartment when the cooking compartment is hot.

⚠ WARNING – Risk of injury!

Scratched glass in the appliance door may develop into a crack.

- Do not use any harsh or abrasive cleaners or sharp metal scrapers to clean the glass on the appliance door, as they may scratch the surface.

The hinges on the appliance door move when the door is opened and closed, which could trap your fingers.

- Keep your hands away from the hinges.

Cracks, splinters or breaks in the glass turntable are dangerous.

- Never allow hard objects to strike the turntable.
- Handle the turntable with care.

⚠ WARNING – Risk of electric shock!

If the insulation of the power cord is damaged, this is dangerous.

- Never let the power cord come into contact with hot appliance parts or heat sources.
- Never let the power cord come into contact with sharp points or edges.
- Never kink, crush or modify the power cord.

⚠ WARNING – Risk of suffocation!

Children may put packaging material over their heads or wrap themselves up in it and suffocate.

- Keep packaging material away from children.
- Do not let children play with packaging material.

Children may breathe in or swallow small parts, causing them to suffocate.

- Keep small parts away from children.
- Do not let children play with small parts.

1.5 Microwave

CAREFULLY READ THE IMPORTANT SAFETY INSTRUCTIONS AND KEEP THEM SAFE FOR FUTURE USE

⚠ WARNING – Risk of fire!

Using the appliance for anything other than its intended purpose is dangerous and may cause damage. For example, heated slippers and pillows filled with grain or cereal may catch fire, even several hours later.

- Never dry food or clothing with the appliance.
- Never heat up slippers, pillows filled with grain or cereal, sponges, damp cleaning cloths or similar with the appliance.
- The appliance must only be used to prepare food and drink.

Food and its packaging and containers may catch fire.
- Never heat food in heat-retaining packaging.
- Do not leave food unattended while it is heating in containers made of plastic, paper or other combustible materials.
- Never set the microwave power too high or the cooking time too long. Follow the instructions provided in this user manual.
- Never use the microwave to dry food.
- Never defrost or heat food with a low water content, such as bread, at too high a microwave power or for too long.

Cooking oil may catch fire.
- Never use the microwave to heat cooking oil on its own.

⚠ WARNING – Risk of explosion!

Liquids and other food may easily explode when in containers that have been tightly sealed.
- Never heat liquids or other food in containers that have been tightly sealed.

⚠ WARNING – Risk of burns!

Foods with peel or skin may burst or explode during heating, or even afterwards.
- Never cook eggs in their shell or heat hard-boiled eggs in their shell.
- Never cook shellfish or crustaceans.
- Always prick the yolk of eggs before microwaving.
- The skin of foods that have a peel or skin, such as apples, tomatoes, potatoes and sausages, may burst. Before heating, prick the peel or skin.

Heat is not distributed evenly through baby food.
- Never heat baby food in closed containers.
- Always remove the lid or teat.
- Stir or shake well after heating.
- Check the temperature before giving the food or drink to a child.

Heated food gives off heat. The cookware may become hot.
- Always use oven gloves to remove cookware or accessories from the cooking compartment.

Airtight packaging may burst when food is heated.
- Always follow the instructions on the packaging.
- Always use oven gloves to remove the dishes from the cooking compartment.

The accessible parts of the appliance become hot during operation.
- Never touch these hot parts.
- Keep children at a safe distance.

Using the appliance for anything other than its intended purpose is dangerous. This is because, for instance, overheated slippers, pillows filled with grain or cereal, sponges and damp cleaning cloths, etc., may cause burns to the skin.
- Never dry food or clothing with the appliance.
- Never heat up slippers, pillows filled with grain or cereal, sponges, damp cleaning cloths or similar with the appliance.
- The appliance must only be used to prepare food and drink.

⚠ WARNING – Risk of scalding!

There is a possibility of delayed boiling when a liquid is heated. This means that the liquid reaches the boiling temperature without the usual steam bubbles rising to the surface. Exercise caution even when only gently shaking the container. The hot liquid may suddenly boil over and splatter.
- Always place a spoon in the container when heating liquids. This prevents delayed boiling.

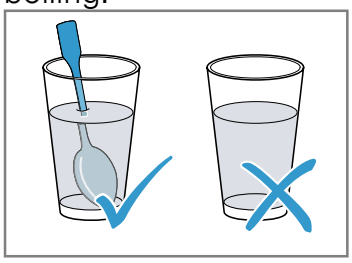

⚠ WARNING – Risk of injury!

Unsuitable cookware may crack. Porcelain or ceramic cookware can have small perforations in the handles and lid. These perforations conceal a cavity below. If moisture penetrates this cavity, it could cause the cookware to crack.
- Only use microwave-safe cookware.

Cookware and containers made from metal or cookware with metal edging may lead to sparks being formed during simple microwave operation. The appliance is damaged.

- Never use metal containers during microwave-only operation.
- Only use microwave-safe cookware.

⚠ WARNING – Risk of electric shock!

The appliance uses a high voltage.

- Never remove the casing.

⚠ WARNING – Risk of serious harm to health!

Inadequate cleaning may destroy the surface of the appliance, reduce its service life, and lead to dangerous situations, such as escaping microwave energy.

- Clean the appliance on a regular basis, and remove any food residue immediately.
- Always keep the cooking compartment, door and door stop clean.
  → *"Cleaning and servicing", Page 12*

Never operate the appliance if the cooking compartment door is damaged. Microwave energy may escape.

- Never use the appliance if the cooking compartment door or the plastic door frame is damaged.
- Any repair work must only be carried out by the after-sales service.

Microwave energy will escape from appliances that do not have any casing.

- Never remove the casing.
- Contact our after-sales service if maintenance or repair work is needed.

2 Preventing material damage

2.1 General

ATTENTION!

The prolonged presence of moisture in the cooking compartment leads to corrosion.

- Always wipe away the condensation after cooking.
- Do not keep moist food in the cooking compartment for a long time with the door closed.
- Do not store food in the cooking compartment.

Sitting or placing objects on the appliance door may damage it.

- Do not place, hang or support objects on the appliance door.

2.2 Microwave

Follow these instructions when using the microwave.

ATTENTION!

Metal touching the wall of the cooking compartment will cause sparks, which may damage the appliance or the inner door pane.

- Metal (e.g. a spoon in a glass) must be kept at least 2 cm from the cooking compartment walls and the inside of the door.

Placing aluminium containers in the appliance may cause sparks, which will damage the appliance.

- Do not use aluminium containers in the appliance.

Operating the appliance without food in the cooking compartment may lead to overloading.

- Do not switch on the microwave unless there is food inside. The only exception to this rule is when performing a short cookware test.

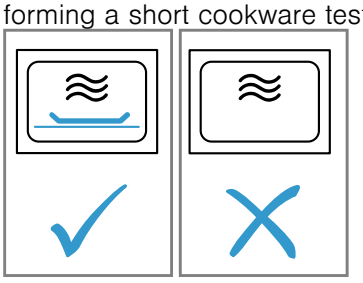

If you prepare several bags of microwave popcorn in immediate succession at a microwave power level that is too high, the cooking compartment may be damaged.

- Leave the appliance to cool down for several minutes between each use.
- Never set a microwave power level that is too high.
- Use a maximum microwave output of 600 watts.
- Always place the popcorn bag on a glass plate.

The microwave feed is damaged by the removal of the cover.

- Never remove the cover of the microwave feed in the cooking compartment.

Removing the transparent film from the inside of the door damages the appliance door.

- Never remove the transparent film on the inside of the door.

Liquid that penetrates the interior of the appliance may damage the turntable drive.
- Monitor the cooking process.
- Set a shorter cooking time first and, if necessary, increase the cooking time.
- Never use the appliance without the turntable.

3 Environmental protection and saving energy

3.1 Disposing of packaging

The packaging materials are environmentally compatible and can be recycled.
- Sort the individual components by type and dispose of them separately.

3.2 Saving energy

If you follow these instructions, your appliance will use less power.

Hide the clock in standby mode.
- The appliance saves energy in standby mode.

Note:
The appliance requires:
- A maximum of 1 W when the appliance is in operation with the display switched on
- A maximum of 0.5 W when the appliance is in operation with the display switched off

4 Familiarising yourself with your appliance

4.1 Control panel

You can use the control panel to configure all functions of your appliance and to obtain information about the operating status.

Note: On certain models, specific details such as colour and shape may differ from those pictured.

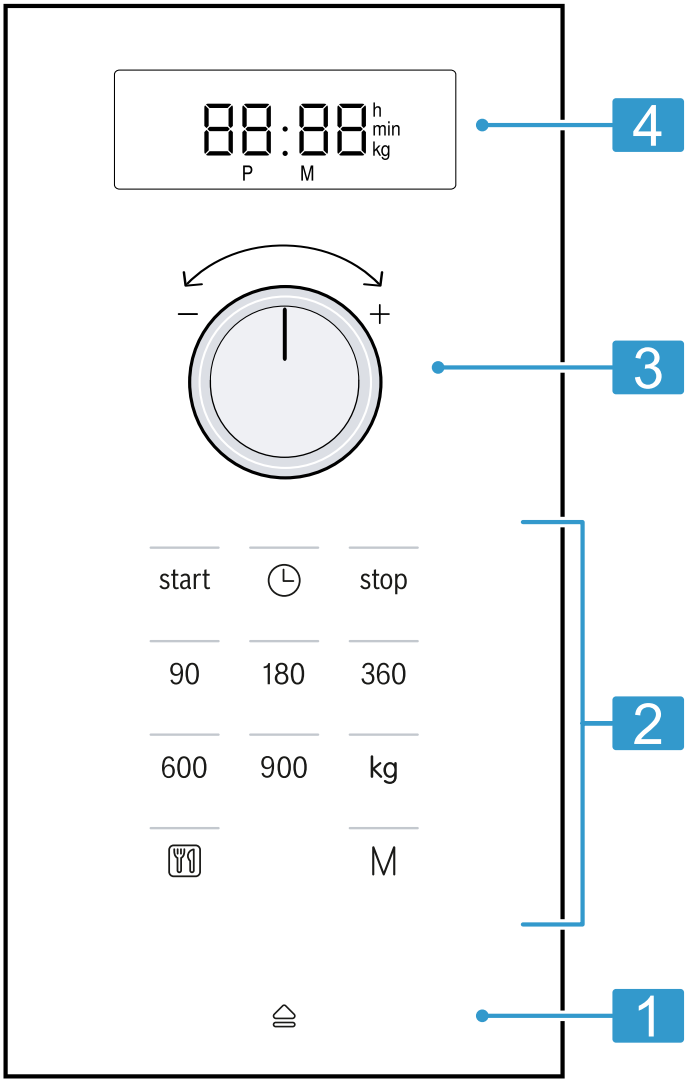

1	Automatic door opener	Open the door automatically.
2	Touch fields	Select functions.
3	Rotary selector	Set the time, cooking time or automatic programmes.
4	Display	Display clock or cooking time.

Rotary selector

Use the rotary selector to change the setting values that are shown on the display.
The rotary selector can be pushed in. To engage or release the rotary selector, push the rotary selector.

Automatic door opener

When you press the automatic door opener, the appliance door springs open. You can fully open the appliance door manually.

Notes

- In the event of a power cut, the automatic door opener does not work. You can open the door manually.

- If you open the appliance door during operation, this pauses the operation.
- When you close the appliance door, the operation does not continue automatically. You must restart the operation.
- If the appliance is switched off for an extended period of time, the appliance door opens with a time delay.

4.2 Types of heating

Here you can find an overview of the types of heating. You can find recommendations on using the types of heating.

Symbol	Name	Use
90–900	Microwave	Defrosting, cooking or heating food and liquids.

4.3 Cooling fan

The cooling fan switches on and off as required.
The cooking compartment remains cold during microwave operation. Despite this, the cooling fan will still switch on.

Note: The cooling fan may run on even if the oven has been switched off.

4.4 Condensation

Condensation can occur in the cooking compartment and on the appliance door when cooking. Condensation is normal and does not adversely affect appliance operation. Wipe away the condensation after cooking.

5 Before using for the first time

Configure the settings for initial start-up. Clean the appliance and accessories.

5.1 Initial configuration

Configure the settings for initial start-up. Clean the appliance and accessories.

Note: After connecting the appliance to the power or following a power cut, a signal sounds and several zeros are shown on the display. It may take a few seconds until a signal sounds and you can set the time.

1. Press ◷.
✔ 12:00 is shown on the display. The indicator light lights up via ◷.
2. Set the clock using the rotary selector.
3. Press ◷.

5.2 Cleaning the appliance before using it for the first time

Clean the cooking compartment and accessories before using the appliance to prepare food for the first time.

1. Make sure that there is no leftover packaging, accessories or other objects in the cooking compartment.
2. Clean the smooth surfaces in the cooking compartment with a soft, damp cloth.
3. To eliminate the new-appliance smell, wipe the empty cooking compartment with hot soapy water.
→ *"Cleaning the cooking compartment", Page 13*

5.3 Fitting the turntable

Never use the appliance without the turntable.

1. Place the roller ring [a] into the recess in the cooking compartment.

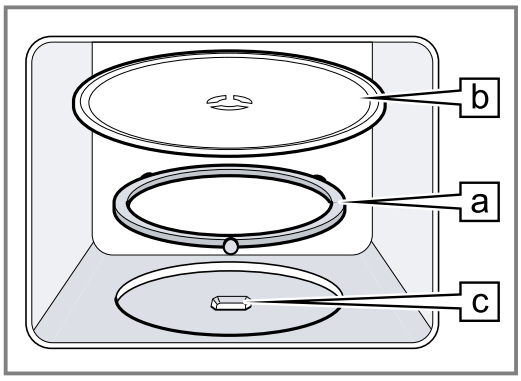

2. Engage the turntable [b] in the drive [c] in the centre of the cooking compartment floor.
3. Check whether the turntable is correctly engaged.

Note: The turntable can turn anti-clockwise or clockwise.

6 Basic operation

6.1 Microwave power settings

This is where you can find an overview of the different microwave power settings and when to use them.

Microwave power setting in watts	Use
90	Defrost delicate foods.
180	Defrost food and continue cooking.
360	Cooking meat and fish or heating delicate foods.
600	Heat and cook food.
900	Heat liquids.

Note:
You can set the microwave power settings for a particular cooking time:
- 900 W for 30 minutes
- 600 W for 60 minutes
- 90 W, 360 W, 180 W for 99 minutes

6.2 Microwave-safe cookware and accessories

To heat food evenly and avoid damaging your appliance, it is important to use the right cookware and accessories.

Note: Read the manufacturer's instructions before using any cookware in the microwave. If in doubt, carry out a cookware test.

Microwave-safe

Cookware and accessories	Reason
Cookware made from heat-resistant, microwave-safe material: ■ Glass ■ Glass ceramic ■ Porcelain ■ Temperature-resistant plastic ■ Fully glazed ceramic without cracks	These materials allow microwaves to pass through. Microwaves do not damage heat-resistant cookware.
Metal cutlery	**Note:** You can use metal cutlery, e.g. place a spoon in a glass, to prevent delayed boiling.

ATTENTION!
Metal touching the wall of the cooking compartment will cause sparks, which may damage the appliance or the inner door pane.
- Metal (e.g. a spoon in a glass) must be kept at least 2 cm from the cooking compartment walls and the inside of the door.

Not microwave-safe

Cookware and accessories	Reason
Metal cookware	Metal does not allow microwaves to pass through. The food hardly heats up.
Cookware with gold or silver decoration	Microwaves can damage gold and silver decoration. **Tip:** You can only use this kind of cookware if the manufacturer guarantees that it is microwave-safe.

6.3 Testing cookware for microwave suitability

Test cookware to see whether it is suitable for microwave use. Testing cookware is the only time the appliance should be operated in microwave mode without any food inside.

⚠ **WARNING – Risk of scalding!**
The accessible parts of the appliance become hot during operation.
- Never touch these hot parts.
- Keep children at a safe distance.

1. Place the empty cookware in the cooking compartment.
2. Set the appliance to the maximum microwave power setting for 30 seconds to 1 minute.
3. Start the operation.
4. Check the cookware several times:
   – If the cookware is cold or warm to the touch, it is suitable for microwave use.
   – If the cookware becomes hot or sparks are created, stop the cookware test. The cookware is not microwave-safe.

6.4 Configuring the microwave settings

ATTENTION!
Operating the appliance without food in the cooking compartment may lead to overloading.
- Do not switch on the microwave unless there is food inside. The only exception to this rule is when performing a short cookware test.

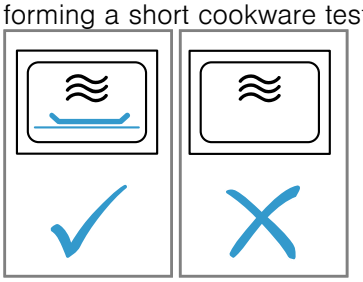

Tip: To ensure optimum use of your appliance, you can refer to the information in the recommended settings.
→ *"How it works", Page 16*

1. Follow the safety instructions. → *Page 3*
2. Read the safety instructions and the section on how to prevent material damage. → *Page 5*
3. Read the information on microwave-safe cookware and accessories. → *Page 9*
4. Use the buttons to set the required microwave power setting.
5. Use the rotary selector to set the required duration.

Note: If you open the cooking compartment door during operation, the microwave interrupts the operation and pauses the set time that is counting down. When you close the cooking compartment door, the operation continues.

6.5 Changing the cooking time

You can change the cooking time at any time.

- Use the rotary selector to set the required duration.

6.6 Pausing operation

1. Press stop or open the appliance door.
✔ The indicator light lights up via start.
2. To continue the operation, close the appliance door and press start.

6.7 Cancelling the operation

- Press stop twice or open the door and press stop once.

7 Memory

You can use the memory function to save the setting for a dish and call it up again at any time.

Tip: If you prepare one dish often, use the memory function.

7.1 Saving memory settings

Note:
- You cannot save several microwave power settings in succession.
- You cannot save any automatic programmes.

1. Press M.
✔ The indicator light lights up via M.
2. Use the buttons to set the required microwave power setting.
✔ The indicator lamp above the button lights up and the display shows 1:00 min.
3. Use the rotary selector to set the required duration.
4. If required, select one of the options:
   – To save the memory and immediately start, press start.
   – To save the memory and not start, press M.
✔ If the appliance does not start, the time appears on the display and the appliance saves the setting.

7.2 Starting the memory

It is very easy to start the saved programme. Place your dish in the appliance and close the appliance door.

1. Press M.
✔ The saved settings are displayed.
2. Press start.

7.3 Pausing operation

1. Press stop or open the appliance door.
✔ The indicator light lights up via start.
2. To continue the operation, close the appliance door and press start.

7.4 Cancelling the operation

- Press stop twice or open the door and press stop once.

8 Programmes

The programmes help you to use your appliance to prepare different dishes by selecting the optimum settings automatically.

8.1 Setting a programme

1. Select a programme.
2. Press repeatedly until the display shows the required programme number.
✔ The indicator light lights up via .
3. Press kg.
✔ The indicator lamp above kg lights up and the display shows a suggested value for the weight.
4. Turn the rotary selector to specify the weight of the dish.
   If it is not possible to enter the exact weight, round the weight up or down.
5. Press start to start the operation.
✔ The cooking time visibly counts down.
6. If an audible signal sounds during the programme, open the appliance door.
   – Break up, stir or turn the food.
   – Close the appliance door.
   – Press start.

8.2 Pausing operation

1. Press stop or open the appliance door.
✔ The indicator light lights up via start.
2. To continue the operation, close the appliance door and press start.

8.3 Cancelling the operation

- Press stop twice or open the door and press stop once.

8.4 Defrosting with the automatic programmes

You can use the four defrosting programmes to defrost meat, poultry and bread.

Programme	Food	Cookware	Weight range in kg
P01	Minced meat	Open	0.20–1.00
P02	Pieces of meat	Open	0.20–1.00
P03	Chicken, chicken pieces	Open	0.40–1.80
P04	Bread	Open	0.20–1.00

Defrosting food using the automatic programmes

1. Take the food out of its packaging.
   Use food that is stored flat and in portion-sized quantities at -18 °C.
2. Weigh the food.
   You require the weight in order to set the programme.
3. Place the food in a microwaveable shallow dish, e.g. a glass plate or porcelain plate.
   Do not put the cover on.
4. Set the programme. → *Page 10*
5. **Note:** Liquid is produced when you defrost meat and poultry.
   Drain off any liquid when turning and under no circumstances use it for other purposes or allow it to come into contact with other foods.
6. Flat pieces of meat and items made from minced meat should be separated from each other before leaving to stand.
7. The defrosted food should be left to stand for an additional 10 to 30 minutes until it reaches an even temperature.
   Large pieces of meat require a longer standing time than smaller pieces. For poultry, remove the giblets after the resting time.
8. Continue to prepare the food, even though thick pieces of meat may still be frozen in the middle.

8.5 Cooking with the automatic programmes

With the three cooking programmes, you can cook rice, potatoes or vegetables.

Programme	Food	Cookware	Weight range in kg	Information
P05	Rice	With lid	0.05–0.20	▪ For rice, use a large, deep dish. ▪ Do not use any boil-in-the-bag rice. ▪ For every 100 g rice, add twice to three times the amount of water.
P06	Potatoes	With lid	0.15–1.00	▪ For boiled potatoes, cut fresh potatoes into small, equally sized pieces. ▪ Add one tablespoon of water and a little salt for every 100 g boiled potatoes.
P07	Vegetables	With lid	0.15–1.00	▪ Weigh fresh, washed vegetables scales. ▪ Cut the vegetables into small, uniform pieces. ▪ Add one tablespoon of water for every 100 g boiled potatoes.

Cooking food with the automatic programmes

1. Weigh the food.
   You require the weight in order to set the programme.
2. Place the food on microwave-safe cookware and cover with a lid.
3. Add the volume of water in accordance with the manufacturer's instructions on the packaging.
4. Set the programme. → *Page 10*
5. Once the programme has finished, stir the food again.
6. The food should be left to stand for an additional 5 to 10 minutes until it reaches a uniform temperature.
   The cooking results are dependent on the food quality and consistency of the food.

9 Basic settings

You can configure the basic settings for your appliance to meet your needs.

9.1 Overview of the basic settings

Here you can find an overview of the basic settings and factory settings. The basic settings depend on the features of your appliance.

Setting	Selection	Meaning
1 Button tone	▪ On[1] ▪ OFF	Switch the button tone on and off. **Note:** The button tone remains active for start and stop.
2 Demo mode	dEO	Activate or deactivate demo mode. **Note:** The appliance is switched off. You can use the buttons and the display; the buttons do not work. Demo mode is mainly useful for dealers.

[1] Factory setting (may vary according to model)

9.2 Changing basic settings

Requirement: The appliance is switched off.

1. Press and hold start and stop for a few seconds.
✔ The display shows the first basic setting.
2. Press start.
✔ The current value flashes on the display.
3. Set the desired value with the rotary selector.
4. To accept the basic setting, press start.
5. To exit the basic setting, press stop.
6. Use the rotary selector to change to the basic setting 2.
7. To edit the basic setting, press start.
✔ The selected setting lights up on the display.
8. Set the desired value with the rotary selector.
9. To accept the basic setting, press start.
10. To exit the basic setting, press stop.
11. To exit the basic settings menu, press stop again.

Tip: The setting can be changed at any time.

9.3 Changing the signal duration

When your appliance is switched off, you hear an audible signal. You can change the duration of the signal.

▸ Press and hold start for approx. six seconds.
✔ The signal duration switches between short and long.
✔ The appliance applies the signal duration and displays the time.

9.4 Setting the time

Note: After connecting the appliance to the power or following a power cut, a signal sounds and several zeros are shown on the display. It may take a few seconds until a signal sounds and you can set the time.

1. Press ◷.
✔ 12:00 is shown on the display. The indicator light lights up via ◷.
2. Set the clock using the rotary selector.
3. Press ◷.

9.5 Hiding the clock

To reduce the standby consumption of your appliance, you can hide the clock.

1. Press ◷.
2. Press stop.
To view the clock, press ◷ again.

10 Cleaning and servicing

To keep your appliance working efficiently for a long time, it is important to clean and maintain it carefully.

10.1 Cleaning products

Only use suitable cleaning agents.

⚠ **WARNING – Risk of electric shock!**

An ingress of moisture can cause an electric shock.

▸ Do not use steam- or high-pressure cleaners to clean the appliance.

ATTENTION!
Unsuitable cleaning agents damage the surfaces of the appliance.
- Do not use harsh or abrasive cleaning products.
- Do not use cleaning products with a high alcohol content.
- Do not use hard scouring pads or cleaning sponges.
- Do not use any special cleaners for cleaning the appliance while it is hot.
- Only use glass cleaners, glass scrapers or stainless steel care products if recommended in the cleaning instructions for the relevant part.

New sponge cloths contain residues from production.
- Wash new sponge cloths thoroughly before use.

You can find out which cleaning products are suitable for each surface or part of the appliance in the individual cleaning instructions.

10.2 Cleaning the appliance

Clean the appliance as specified. This will ensure that the different parts and surfaces of the appliance are not damaged by incorrect cleaning or unsuitable cleaning products.

⚠ **WARNING – Risk of fire!**
Loose food remnants, fat and meat juices may catch fire.
- Before using the appliance, remove the worst of the food residues and remnants from the cooking compartment, heating elements and accessories.

⚠ **WARNING – Risk of injury!**
Scratched glass in the appliance door may develop into a crack.
- Do not use any harsh or abrasive cleaners or sharp metal scrapers to clean the glass on the appliance door, as they may scratch the surface.

1. Read the information on cleaning products.
   → *Page 12*
2. Observe the information on cleaning the appliance components or surfaces.
3. Unless otherwise specified:
   – Clean the components of the appliance with hot soapy water and a dish cloth.
   – Dry with a soft cloth.

10.3 Cleaning the cooking compartment

ATTENTION!
Incorrect cleaning may damage the cooking compartment.
- Do not use oven spray, abrasive materials or other aggressive oven cleaners.

1. Read the information on cleaning products.
   → *Page 12*
2. Clean with hot soapy water or a vinegar solution.
3. Use oven cleaner to remove very heavy soiling.
   Only use oven cleaner when the cooking compartment is cold.
   Tip: To eliminate unpleasant odours, heat up a cup of water with a few drops of lemon juice for 1 to 2 minutes at maximum microwave power setting. Always place a spoon in the container to prevent delayed boiling.
4. Wipe out the cooking compartment with a soft cloth.
5. Leave the cooking compartment to dry with the door open.

Cleaning the turntable

1. Read the information on cleaning products.
   → *Page 12*
2. Remove the turntable.
3. Clean the turntable with hot soapy water and a soft dish cloth.
4. Dry with a soft cloth.
5. Reinsert the turntable.
   Ensure that the turntable engages correctly.

10.4 Cleaning the front of the appliance

ATTENTION!
Incorrect cleaning may damage the front of the appliance.
- Do not use glass cleaner, metal scrapers or glass scrapers for cleaning.
- To prevent corrosion on stainless steel fronts, remove any limescale, grease, starch and albumin (e.g. egg white) stains immediately.
- On stainless steel surfaces, use special stainless steel cleaning products suitable for hot surfaces.

1. Read the information on cleaning products.
   → *Page 12*
2. Clean the front of the appliance using hot soapy water and a dish cloth.
   Note: Slight differences in colour on the front of the appliance are caused by the use of different materials, such as glass, plastic and metal.
3. For stainless steel appliance fronts, apply a thin layer of the stainless steel cleaning product with a soft cloth.
   You can obtain the stainless steel cleaning products from the after-sales service or the online shop.
4. Dry with a soft cloth.

10.5 Cleaning the control panel

ATTENTION!
Incorrect cleaning may damage the control panel.
- Never wipe the control panel with a wet cloth.

1. Read the information on cleaning products.
   → *Page 12*
2. Clean the control panel using a microfibre cloth or a soft, damp cloth.
3. Dry with a soft cloth.

10.6 Cleaning the door panels

ATTENTION!
Incorrect cleaning may damage the door panes.
- Do not use a glass scraper.

1. Read the information on cleaning products.
   → *Page 12*

2. Clean the door panels with a soft dish cloth and glass cleaner.
   Note: Shadows on the door panels, which look like streaks, are caused by reflections made by the interior lighting.
3. Dry with a soft cloth.

10.7 Cleaning aid

The cleaning aid is a quick alternative for occasionally cleaning the cooking compartment. The cleaning aid softens dirt by vaporising the soapy water. The dirt can then be removed more easily.

Setting the cleaning function

1. Add a few drops of washing-up liquid to a cup of water.
2. Place a spoon in the cup to prevent delayed boiling.
3. Place the cup in the centre of the cooking compartment.
4. Set the microwave power setting to 600 W.
5. Set the cooking time to 3 minutes.
6. Start the microwave.
7. Once the duration has elapsed, keep the door closed for a further three minutes.
8. Wipe out the cooking compartment with a soft cloth.
9. Leave the cooking compartment to dry with the door open.

11 Troubleshooting

You can rectify minor faults on your appliance yourself. Read the troubleshooting information before contacting after-sales service. This will avoid unnecessary costs.

⚠ **WARNING – Risk of injury!**
Improper repairs are dangerous.
- Repairs to the appliance should only be carried out by trained specialist staff.
- If the appliance is defective, call Customer Service.

11.1 Malfunctions

Fault	Cause and troubleshooting
The appliance is not working.	The mains plug of the power cord is not plugged in. ▸ Connect the appliance to the power supply.
	The circuit breaker in the fuse box has tripped. ▸ Check the circuit breaker in the fuse box.
	There has been a power cut. ▸ Check whether the lighting in your kitchen or other appliances are working.
	Malfunction 1. Switch off the fuse in the fuse box. 2. Switch the fuse back on after approx. 10 seconds. ✔ If the fault was a one-off, the message disappears. 3. If the message appears again, call the after-sales service. Please specify the exact error message when calling. → *"Customer Service", Page 15*
	Door is not fully closed. ▸ Check whether food remains or foreign material are trapped in the door.
Food takes longer than usual to heat up.	The microwave power setting is set too low. ▸ Set a higher microwave power setting. → *Page 9*
	You have placed a larger amount of food than normal in the appliance. ▸ Set a longer cooking time. You need double the time when you have double the amount.
	The food is colder than usual. ▸ Turn or stir the food from time to time during cooking.
Turntable grates or grinds.	There is dirt or foreign objects in the area of the turntable drive. ▸ Clean the roller ring and recess in the cooking compartment.

Fault	Cause and troubleshooting
Microwave mode is cancelled.	Appliance has a fault. ▸ If this fault recurs, call the after-sales service.
The appliance is not in operation. A cooking time is shown in the display.	The settings area has been activated accidentally. ▸ Press stop.
	start was not pressed after the setting was implemented. ▸ Press start or delete the setting by pressing stop.
Three zeros flash on the display.	There has been a power cut. ▸ Reset the time. → *"Initial configuration", Page 8*
An M is shown on the display.	Demo mode is activated. ▸ Deactivate demo mode. → *"Basic settings", Page 12*
The message E 3 appears on the display.	Fault in the automatic door opening system. **1.** Switch off the appliance. **2.** Wait for 10 minutes. **3.** Switch the appliance on again. ▸ If this fault recurs, call the after-sales service.

12 Disposal

12.1 Disposing of old appliance

Valuable raw materials can be reused by recycling.

▸ Dispose of the appliance in an environmentally friendly manner.
Information about current disposal methods are available from your specialist dealer or local authority.

This appliance is labelled in accordance with European Directive 2012/19/EU concerning used electrical and electronic appliances (waste electrical and electronic equipment - WEEE).
The guideline determines the framework for the return and recycling of used appliances as applicable throughout the EU.

13 Customer Service

Detailed information on the warranty period and terms of warranty in your country is available from our after-sales service, your retailer or on our website.
If you contact Customer Service, you will require the product number (E-Nr.) and the production number (FD) of your appliance.
The contact details for Customer Service can be found in the enclosed Customer Service directory or on our website.
This product contains light sources from energy efficiency class G. These light sources are available as a spare part and should only be replaced by trained specialist staff.

13.1 Product number (E-Nr.) and production number (FD)

You can find the product number (E-Nr.) and the production number (FD) on the appliance's rating plate. You will see the rating plate with these numbers if you open the appliance door.

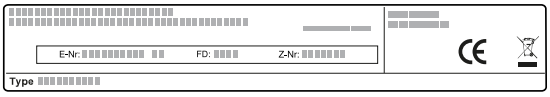

Make a note of your appliance's details and the Customer Service telephone number to find them again quickly.

14 How it works

Here, you can find the ideal settings for various dishes as well as the best accessories and cookware. We have tailored these recommendations to your appliance.

14.1 What is the best way to proceed?

In this section, you will find out the best way to proceed step-by-step in order to be able to make optimum use of the recommended settings. You will get information on many meals, with details and tips on how to best use and set your appliance.

⚠ **WARNING – Risk of burns!**
Heated food gives off heat. The cookware may become hot.
- Always use oven gloves to remove cookware or accessories from the cooking compartment.

Note: The times given in the tables are guidelines and depend on the quality, temperature and consistency of the food.

1. Before using the appliance, remove all unnecessary cookware from the cooking compartment.
2. Select a type of food from the recommended settings.
3. Add the food to a suitable tableware.
   → *"Microwave-safe cookware and accessories", Page 9*
4. Always place the cookware on the turntable.
5. Set the appliance according to the recommended settings.
   Time ranges are often specified in the recommended settings. Set the shorter cooking time first. If necessary, increase the cooking time. If two microwave power settings and times are specified in the tables, set the first microwave power setting and cooking time first and, after the signal, set the second.

Tip: If you want to cook quantities that deviate from those specified in the tables, set approximately double the time for double the amount.

14.2 Tips for defrosting and heating

Follow these tips for good results when defrosting and heating.

Issue	Tip
The food should be defrosted, hot or cooked once the time has elapsed.	Set a longer cooking time. Larger quantities and food which is piled high require longer times.
Once the time has elapsed, the food should not be overheated at the edge and cooked in the middle.	▪ Stir the food occasionally. ▪ Set a lower microwave power setting and a longer cooking time.
After defrosting, poultry or meat should not be defrosted on the outside only but still frozen in the middle.	▪ Set a lower microwave power setting. ▪ If you are defrosting a large quantity, turn it several times.
The food should not be too dry.	▪ Set a lower microwave power setting. ▪ Set a shorter cooking time. ▪ Cover the food. ▪ Add more liquid.

14.3 Defrosting

With your appliance you can defrost frozen food.

Defrosting food

1. Place the frozen food in an open container on the turntable.
   Delicate parts, such as the legs and wings of chicken or fatty outer layers of roasts, can be covered with small pieces of aluminium foil. The foil must not touch the sides of the cooking compartment.
2. Start the operation.
   You can remove the foil halfway through the defrosting time.
3. **Note:** Liquid is produced when you defrost meat and poultry.
   Drain off any liquid when turning and under no circumstances use it for other purposes or allow it to come into contact with other foods.
4. Redistribute the food or turn it once or twice as it defrosts.
   Turn large pieces of food several times.
5. To even out the temperature, leave the defrosted food to stand at room temperature for approx. 10–20 minutes.
   You can remove the giblets from poultry at this point. You can continue to cook the meat even if a small section of it is still frozen in the centre.

Defrosting with the microwave

Observe the recommended settings for using the microwave to defrost frozen food.

Food	Weight in g	Microwave power setting in W	Cooking time in mins
Whole pieces of beef, veal or pork (on the bone or boned)	800	**1.** 180 **2.** 90	**1.** 15 **2.** 10–20
Whole pieces of beef, veal or pork (on the bone or boned)	1000	**1.** 180 **2.** 90	**1.** 20 **2.** 15–25
Whole pieces of beef, veal or pork (on the bone or boned)	1500	**1.** 180 **2.** 90	**1.** 30 **2.** 20–30
Meat in pieces or slices of beef, veal or pork	200	**1.** 180 **2.** 90	**1.** 2[1] **2.** 4–6
Meat in pieces or slices of beef, veal or pork	500	**1.** 180 **2.** 90	**1.** 5[1] **2.** 5–10
Meat in pieces or slices of beef, veal or pork	800	**1.** 180 **2.** 90	**1.** 8[1] **2.** 10–15
Minced meat, mixed[2, 3]	200	90	10[4]
Minced meat, mixed[2, 3]	500	**1.** 180 **2.** 90	**1.** 5[4] **2.** 10–15
Minced meat, mixed[2, 3]	800	**1.** 180 **2.** 90	**1.** 8[4] **2.** 10–20
Poultry or poultry portions[5]	600	**1.** 180 **2.** 90	**1.** 8 **2.** 10–20
Poultry or poultry portions[5]	1200	**1.** 180 **2.** 90	**1.** 15 **2.** 10–20
Fish fillet, fish steak or fish slices[5]	400	**1.** 180 **2.** 90	**1.** 5 **2.** 10–15
Vegetables, e.g. peas	300	180	10–15
Fruit, e.g. raspberries[5]	300	180	7–10[6]
Fruit, e.g. raspberries[5]	500	**1.** 180 **2.** 90	**1.** 8[6] **2.** 5–10
Butter, defrosting[7]	125	**1.** 180 **2.** 90	**1.** 1 **2.** 2–3
Butter, defrosting[7]	250	**1.** 180 **2.** 90	**1.** 1 **2.** 3–4
Loaf of bread	500	**1.** 180 **2.** 90	**1.** 6 **2.** 5–10
Loaf of bread	1000	**1.** 180 **2.** 90	**1.** 12 **2.** 10–20
Cakes, plain, e.g. sponge cake[8, 9]	500	90	10–15
Cakes, plain, e.g. sponge cake[8, 9]	750	**1.** 180 **2.** 90	**1.** 5 **2.** 10–15
Cakes, moist, e.g. fruit flan, cheesecake[8]	500	**1.** 180 **2.** 90	**1.** 5 **2.** 15–20
Cakes, moist, e.g. fruit flan, cheesecake[8]	750	**1.** 180 **2.** 90	**1.** 7 **2.** 15–20

[1] Separate any defrosted parts when turning.
[2] Freeze the food flat.
[3] Remove any meat that has already defrosted.
[4] Turn the food several times.
[5] Separate any defrosted parts.
[6] Carefully stir the food occasionally.
[7] Remove all packaging.
[8] Only defrost cakes without icing, whipped cream, gelatine or custard.
[9] Separate the pieces of cake.

14.4 Heating

With your appliance you can heat food.

Heating food

⚠ **WARNING – Risk of burns!**

Heated food gives off heat. The cookware may become hot.

- Always use oven gloves to remove cookware or accessories from the cooking compartment.

⚠ **WARNING – Risk of scalding!**

There is a possibility of delayed boiling when a liquid is heated. This means that the liquid reaches the boiling temperature without the usual steam bubbles rising to the surface. Exercise caution even when only gently shaking the container. The hot liquid may suddenly boil over and splatter.

- Always place a spoon in the container when heating liquids. This prevents delayed boiling.

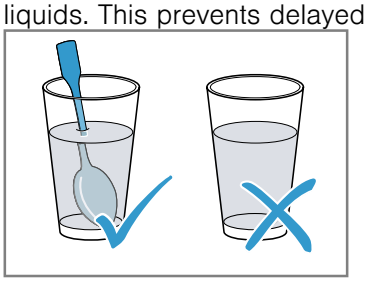

ATTENTION!

Metal touching the wall of the cooking compartment will cause sparks, which may damage the appliance or the inner door pane.

- Metal (e.g. a spoon in a glass) must be kept at least 2 cm from the cooking compartment walls and the inside of the door.

1. Take ready meals out of the packaging and place in microwave-safe cookware.
2. Distribute the food flat in the cookware.
3. Cover the food with a suitable lid, a plate or special microwave foil.
4. Start the operation.
5. Turn or stir the food several times during cooking. The speed at which different components of the meal heat up may vary.
6. Check the temperature.
7. To even out the temperature, leave the heated food to stand at room temperature for approx. 2–5 minutes.

Heating frozen food in the microwave

Observe the recommended settings for using the microwave to heat frozen food.

Food	Weight in g	Microwave power setting in W	Cooking time in mins
Set menu, plated meal, ready meal with 2–3 components	300–400	600	8–11
Soup	400	600	8–10
Stew	500	600	10–13
Slices or pieces of meat in sauce, e.g. goulash	500	600	12–17[1]
Bakes, e.g. lasagne, cannelloni	450	600	10–15
Side dishes, e.g. rice, pasta[2]	250	600	2–5
Side dishes, e.g. rice, pasta[2]	500	600	8–10
Vegetables, e.g. peas, broccoli, carrots[3]	300	600	8–10
Vegetables, e.g. peas, broccoli, carrots[3]	600	600	14–17
Creamed spinach[4]	450	600	11–16

[1] Separate the pieces of meat when stirring.
[2] Add a little liquid to the food.
[3] Pour water into the dish so that it covers the base.
[4] Cook the food without any additional water.

Heating in the microwave

Observe the recommended settings for using the microwave to heat food.

Food	Amount	Microwave power setting in W	Cooking time in mins
Beverages[1]	200 ml	800	2–3[2, 3]
Beverages[1]	500 ml	800	3–4[2, 3]
Baby food, e.g. baby bottles[4]	50 ml	360	Approx. 0.5[5, 6]
Baby food, e.g. baby bottles[4]	100 ml	360	Approx. 1[5, 6]
Baby food, e.g. baby bottles[4]	200 ml	360	1.5[5, 6]
Soup, 1 cup	200 g	600	2–3
Soup, 2 cups	400 g	600	4–5
Set menu, plated meal, ready meal with 2–3 components	350–500 g	600	4–8
Meat in sauce[7]	500 g	600	8–11
Stew	400 g	600	6–8
Stew	800 g	600	8–11
Vegetables, 1 portion[8]	150 g	600	2–3
Vegetables, 2 portions[8]	300 g	600	3–5

[1] Place a spoon in the glass.
[2] Do not overheat alcoholic drinks.
[3] Check the food occasionally.
[4] Heat up baby food without the teat or lid.
[5] Always shake the food well after heating.
[6] Always check the temperature.
[7] Separate the slices of meat.
[8] Add a little liquid to the food.

14.5 Test dishes

These overviews have been produced for test institutes to facilitate appliance testing in accordance with EN 60350-1:2013 or IEC 60350-1:2011 and EN 60705:2012, IEC 60705:2010.

Cooking with the microwave

Food	Microwave power setting in W	Cooking time in mins	Note:
Custard, 750 g	**1.** 360 **2.** 90	**1.** 12–17 **2.** 20–25	Place the Pyrex dish 20 x 25 cm on the turntable.
Biscuit	600	8–10	Place a 22 cm diameter Pyrex dish on the turntable.
Meat loaf	600	20–25	Place a Pyrex dish on the turntable.

Defrosting with the microwave

Recommended settings for using the microwave to defrost food.

Food	Microwave power setting in W	Cooking time in mins	Note:
Meat	**1.** 180 **2.** 90	**1.** 5–7 **2.** 10–15	Place the Pyrex dish (22 cm diameter) on the turntable.

15 Installation instructions

Observe this information when installing the appliance.

15.1 Safe installation

Follow these safety instructions when installing the appliance.

- The appliance can only be used safely if it is correctly installed according to the safety instructions. The installer is responsible for ensuring that the appliance works perfectly at its installation location.
- Check the appliance for damage after unpacking it. Do not connect the appliance if it has been damaged in transit.
- Before starting up the appliance, remove any packaging material and adhesive film from the cooking compartment and the door.
- Never remove the transparent film on the inside of the door.
- Proceed in accordance with the installation sheets for installing accessories.
- Fitted units must be temperature-resistant up to 90 °C, and adjacent unit fronts up to 65 °C.
- Do not install the appliance behind a decorative door or the door of a kitchen unit. There is a risk of overheating.
- Cut-out work on the units should be carried out before installing the appliance. Remove any shavings. Otherwise, the correct operation of electrical components may be adversely affected.
- Only a licensed professional may connect appliances without plugs. Damage caused by incorrect connection is not covered under the warranty.

⚠ WARNING – Risk of injury!

Parts that are accessible during installation may have sharp edges and may lead to cutting injuries.

- ▸ Wear protective gloves

⚠ WARNING – Risk of fire!

It is dangerous to use an extended power cord and non-approved adapters.

- ▸ Do not use extension cables or multiple socket strips.

15.2 Electrical connection

In order to safely connect the appliance electrically, follow these instructions.

⚠ WARNING – Risk of electric shock!

Incorrect installation is dangerous.

- ▸ Only a qualified electrician may route the socket or replace a power cable while taking into consideration the applicable regulations.
- ▸ Connect the appliance only to a correctly installed, earthed socket.
- ▸ If the plug is no longer accessible following installation, an all-pole isolating unit with a contact clearance of at least 3 mm must be available on the installation side. Contact protection must be ensured by the installation.

15.3 Scope of delivery

After unpacking all parts, check for any damage in transit and completeness of the delivery.

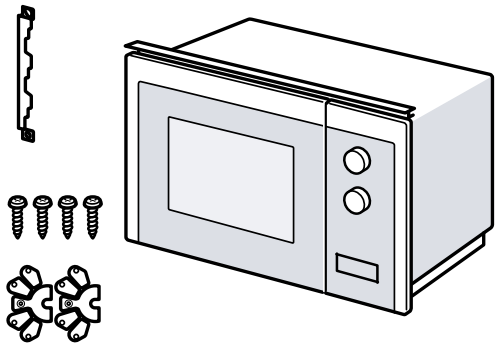

15.4 Fitted units

Here, you can find notes on safe installation.

ATTENTION!

Any shavings may impair the function of electrical components.

- ▸ Carry out cut-out work on the units before installing the appliance.
- ▸ Remove the shavings.

- The minimum installation height is 850 mm.
- The installation cabinet must not have a back panel behind the appliance.
- The ventilation slots and intake openings must not be covered.
- Fitted units must be heat-resistant up to 90 °C, and adjacent unit fronts up to 65 °C.

15.5 Installation dimensions in the tall unit

Observe the installation dimensions and the safety clearances in a tall unit.

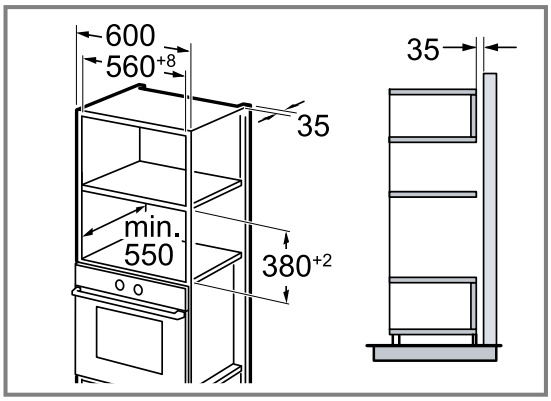

15.6 Preparing the tall unit

1. Determine the wall thickness of the unit. ①
   An x-value is assigned to the wall thickness.
2. **Note:** The x-value corresponds to the clearance between the lower hole on the connection plate and the bottom of the fitted unit.

   Screw the connection plate tightly to the tall unit. ②
   When doing so, observe the x-value that was determined.

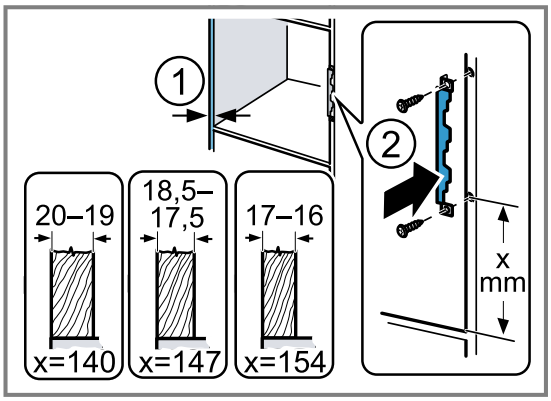

15.7 Installing the appliance

1. Secure the spacers to the appliance in accordance with the wall thickness.

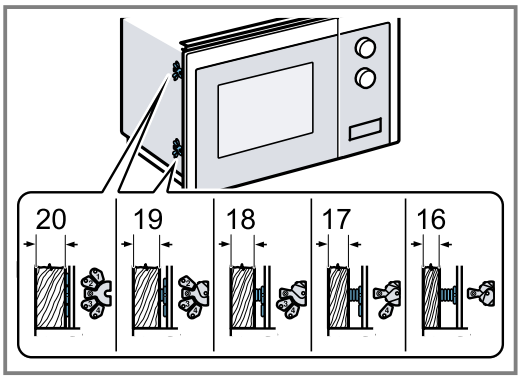

2. **Note:**
   Do not trap or kink the power cable.

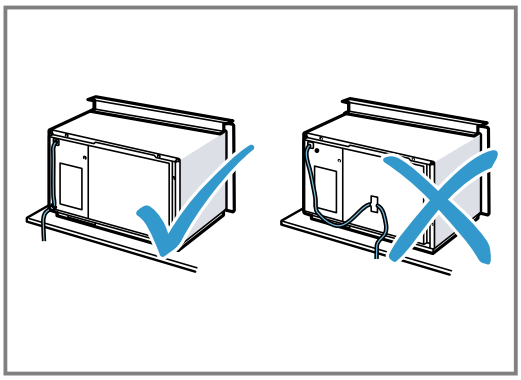

   Insert the appliance into the unit and move it to the right.

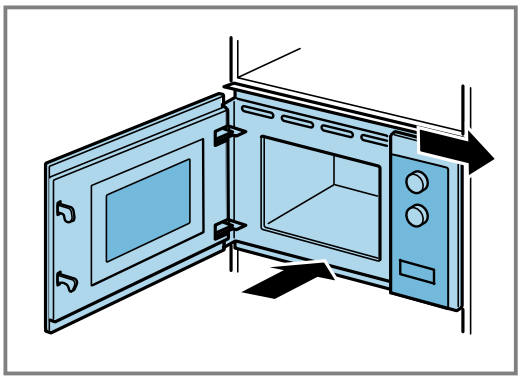

3. Screw the appliance in until the appliance is centrally aligned.

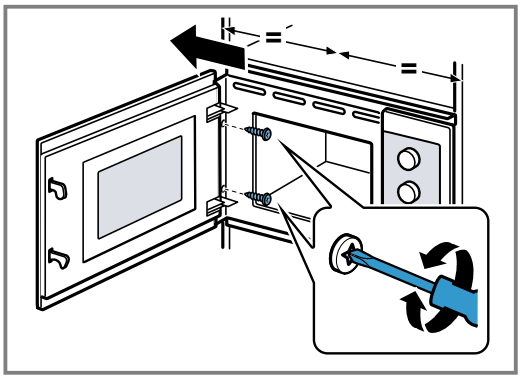

4. Check the clearance to the adjacent appliances.

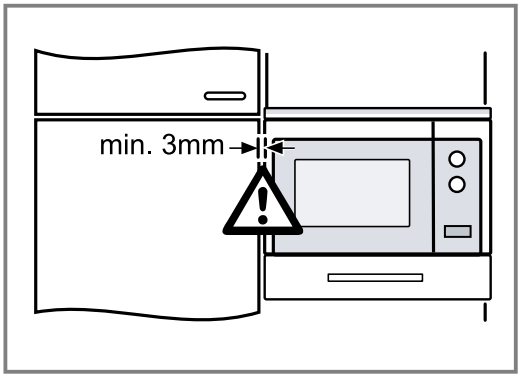

   The clearance to the adjacent appliances must be at least 3 mm.
5. Remove any packaging material and adhesive film from the cooking compartment and the door.

Thank you for buying a Bosch Home Appliance!

Register your new device on MyBosch now and profit directly from:

- **Expert tips & tricks for your appliance**
- **Warranty extension options**
- **Discounts for accessories & spare-parts**
- **Digital manual and all appliance data at hand**
- **Easy access to Bosch Home Appliances Service**

Free and easy registration – also on mobile phones:
www.bosch-home.com/welcome

Looking for help? You'll find it here.

Expert advice for your Bosch home appliances, help with problems or a repair from Bosch experts.
Find out everything about the many ways Bosch can support you:
www.bosch-home.com/service
Contact data of all countries are listed in the attached service directory.

BSH Hausgeräte GmbH
Carl-Wery-Straße 34
81739 München, GERMANY
www.bosch-home.com

A Bosch Company

9001610934 (020427)
en

Valid within Great Britain:
Imported to Great Britain by
BSH Home Appliances Ltd.
Grand Union House
Old Wolverton Road
Wolverton, Milton Keynes
MK12 5PT
United Kingdom