BOSCH

Register your new device on MyBosch now and get free benefits:
bosch-home.com/welcome

MyBosch

Free standing cooker

HLS79R350A

[en] Instruction manual

Free standing cooker

Table of contents

Intended use . . . 5

Important safety information . . . 5
Halogen lamp . . . 7
Cleaning function . . . 7

Causes of damage . . . 8
Hob . . . 8
Damage to the oven . . . 8
Damage to the plinth drawer . . . 8

Environmental protection . . . 9
Saving energy . . . 9
Energy-saving advice . . . 9
Environmentally-friendly disposal . . . 10

Induction cooking . . . 10
Advantages of induction cooking . . . 10
Cookware . . . 10

Installation and connection . . . 11
Electrical connection . . . 11
Removing the appliance . . . 12
Levelling the cooker . . . 12
Adjacent units . . . 12
Wall fixing . . . 12
Measures to be noted during transport . . . 12

Getting to know your appliance . . . 13
General information . . . 13
Cooking area . . . 13
Control panel . . . 14
Cooking compartment . . . 16

Accessories . . . 17
Accessories included . . . 17
Inserting accessories . . . 17
Optional accessories . . . 17

Before using for the first time . . . 18
Initial use . . . 18
Cleaning the cooking compartment and accessories 18

Operating the appliance . . . 19
Switching the hob on and off . . . 19
Setting a hotplate . . . 19
Chef's recommendations . . . 19

CombiZone function . . . 22
Notes regarding cookware . . . 22
Activation . . . 22
Deactivating . . . 22

Move function . . . 22
Advice on using cookware . . . 22
Activation . . . 23
Deactivation . . . 23

Time-setting options . . . 23
Programming the cooking time . . . 23
The kitchen timer . . . 24

PowerBoost function . . . 24
Activation . . . 24
Deactivation . . . 24

Childproof lock . . . 25
Activating and deactivating the childproof lock . . . 25
Childproof lock . . . 25

Wipe protection . . . 25

Automatic safety cut-out . . . 26

Basic settings . . . 26
To access the basic settings: . . . 27

Energy consumption indicator . . . 28

Cookware check . . . 28

Power manager . . . 29

Operating the appliance . . . 29
Switching the appliance on and off . . . 29
Setting the heating function and temperature . . . 29
Rapid heating . . . 30

Time-setting options . . . 30
Setting the cooking time . . . 30
Setting the end time . . . 31
Setting the timer . . . 32
Setting the time . . . 32

Childproof lock . . . 33
Activating and deactivating . . . 33

Basic settings . . . 33
List of basic settings . . . 33
Changing the basic settings . . . 34

Sabbath mode . . . 34
Starting Sabbath mode . . . 34

Cleaning 35
Cleaning agents 35
Keeping the appliance clean 37

Cleaning function 37
Before running the cleaning function 37
Setting the cleaning function 38
After running the cleaning function 38

Rails 39
Detaching and refitting the rails 39

Appliance door 39
Detaching and attaching the oven door 39
Fitting and removing the door panels 40
Additional door safety 41

Frequently Asked Questions (FAQ) 42

Trouble shooting 43
Rectifying faults yourself 44
Maximum operating time 44
Replacing the bulb in the oven ceiling light 45

Customer service 45
E number and FD number 45

Programmes 46
Cookware 46
Preparing food 46
Programmes 46
Setting a programme 48

Tested for you in our cooking studio 49
General information 49
Cakes and pastries 50
Bakes and gratins 53
Poultry, meat and fish 53
Vegetables and side dishes 56
Yoghurt 56
Acrylamide in foodstuffs 57
Slow cooking 57
Drying 58
Preserving 58
Prove dough 59
Defrosting 60
Keeping warm 60
Test dishes 60

Additional information on products, accessories, replacement parts and services can be found at

www.bosch-home.com and in the online shop
www.bosch-eshop.com

Intended use

Read these instructions carefully. Only then will you be able to operate your appliance safely and correctly. Retain the instruction manual and installation instructions for future use or for subsequent owners.

The images shown in these instructions are for guidance only.

Check the appliance for damage after unpacking it. Do not connect the appliance if it has been damaged in transport.

Only a licensed professional may connect appliances without plugs. Damage caused by incorrect connection is not covered under warranty.

This appliance is intended for private domestic use and the household environment only. The appliance must only be used for the preparation of food and beverages. The cooking process must be supervised. A short cooking process must be supervised without interruption. Only use the appliance in enclosed spaces.

This appliance is intended for use up to a maximum height of 4000 metres above sea level.

This appliance is not designed for operation with an external timer or by remote control.

Do not use inappropriate child safety shields or hob guards. These can cause accidents.

This appliance may be used by children over the age of 8 years old and by persons with reduced physical, sensory or mental capabilities or by persons with a lack of experience or knowledge if they are supervised or are instructed by a person responsible for their safety how to use the appliance safely and have understood the associated hazards.

Children must not play with, on, or around the appliance. Children must not clean the appliance or carry out general maintenance unless they are at least 15 years old and are being supervised.

Keep children below the age of 8 years old at a safe distance from the appliance and power cable.

We advise that you exercise caution using or standing near an induction hob while it is in operation, if you wear a pacemaker or a similar medical device. Consult your doctor or the device manufacturer concerning its conformity or any possible incompatibilities,

Always slide accessories into the cooking compartment the right way round.
→ *"Accessories" on page 17*

Important safety information

⚠ Warning – Risk of fire!

- Combustible items stored in the cooking compartment may catch fire. Never store combustible items in the cooking compartment. Never open the appliance door if there is smoke inside. Switch off the appliance and unplug it from the mains or switch off the circuit breaker in the fuse box.
- A draught is created when the appliance door is opened. Greaseproof paper may come into contact with the heating element and catch fire. Do not place greaseproof paper loosely over accessories during preheating. Always weight down the greaseproof paper with a dish or a baking tin. Only cover the surface required with greaseproof paper. Greaseproof paper must not protrude over the accessories.
- Hot oil and fat can ignite very quickly. Never leave hot fat or oil unattended. Never use water to put out burning oil or fat. Switch off the hotplate. Extinguish flames carefully using a lid, fire blanket or something similar.
- The hotplates become very hot. Never place combustible items on the hob. Never place objects on the hob.
- The appliance becomes very hot, and flammable materials can easily catch fire.
  Do not store or use any flammable objects (e.g. aerosol cans, cleaning agents) under or in the vicinity of the oven. Do not store any flammable objects inside or on top of the oven.
- The surfaces of the plinth drawer may become very hot. Only store oven accessories in the drawer. Flammable and combustible objects must not be stored in the plinth drawer.
- The hob switches off automatically and can no longer be operated. It may switch on unintentionally at a later point. Switch off the circuit breaker in the fuse box. Contact the after-sales service.

⚠ Warning – Risk of burns!

- The appliance becomes very hot. Never touch the interior surfaces of the cooking compartment or the heating elements. Always allow the appliance to cool down. Keep children at a safe distance.
- Accessories and ovenware become very hot. Always use oven gloves to remove accessories or ovenware from the cooking compartment.
- Alcoholic vapours may catch fire in the hot cooking compartment. Never prepare food containing large quantities of drinks with a high alcohol content. Only use small quantities of drinks with a high alcohol content. Open the appliance door with care.
- The hotplates and surrounding area (particularly the hob surround, if fitted) become very hot. Never touch the hot surfaces. Keep children at a safe distance.
- During operation, the surfaces of the appliance become hot. Do not touch the surfaces when they are hot. Keep children away from the appliance.
- The hotplate heats up but the display does not work. Switch off the circuit breaker in the fuse box. Contact the after-sales service.
- The appliance becomes hot during operation. Allow the appliance to cool down before cleaning.
- Metal objects on the hob quickly become very hot. Never place metal objects (such as knives, forks, spoons and lids) on the hob.
- After each use, always turn off the hob at the main switch. Do not wait until the hob turns off automatically after the pan is removed.

⚠ Warning – Risk of scalding!

- The accessible parts become hot during operation. Never touch the hot parts. Keep children at a safe distance.
- When you open the appliance door, hot steam can escape. Steam may not be visible, depending on its temperature. When opening, do not stand too close to the appliance. Open the appliance door carefully. Keep children away.
- Water in a hot cooking compartment may create hot steam. Never pour water into the cooking compartment when the cooking compartment is hot.

⚠ Warning – Risk of injury!

- Scratched glass in the appliance door may develop into a crack. Do not use a glass scraper, sharp or abrasive cleaning aids or detergents.
- When cooking in a bain marie, the hob and cooking container could shatter due to overheating. The cooking container in the bain marie must not directly touch the bottom of the water-filled pot. Only use heat-resistant cookware.
- Saucepans may suddenly jump due to liquid between the pan base and the hotplate. Always keep the hotplate and saucepan bases dry.
- If the appliance is placed on a base and is not secured, it may slide off the base. The appliance must be fixed to the base.
- If you leave the appliance door open, people may bump into it, resulting in injury. The appliance door must be kept closed both while the appliance is in operation and when it has finished.

⚠ Warning – Risk of tipping!

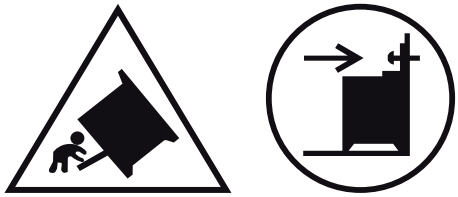

Warning: In order to prevent tipping of the appliance, this stabilizing means must be installed. Refer to the instructions for installation.

⚠ Warning – Risk of electric shock!

- Incorrect repairs are dangerous. Repairs may only be carried out and damaged power cables replaced by one of our trained after-sales technicians. If the appliance is defective, unplug the appliance from the mains or switch off the circuit breaker in the fuse box. Contact the after-sales service.
- The cable insulation on electrical appliances may melt when touching hot parts of the appliance. Never bring electrical appliance cables into contact with hot parts of the appliance.

- Do not use any high-pressure cleaners or steam cleaners, which can result in an electric shock.
- A defective appliance may cause electric shock. Never switch on a defective appliance. Unplug the appliance from the mains or switch off the circuit breaker in the fuse box. Contact the after-sales service.
- Cracks or fractures in the glass ceramic may cause electric shocks. Switch off the circuit breaker in the fuse box. Contact the after-sales service.
- When disconnecting the appliance from the mains, the connections may cause residual voltages. Only allow a professional to connect the appliance.

Halogen lamp

⚠ Warning – Risk of burns!
The bulbs in the cooking compartment become very hot. There is still a risk of burning your skin for some time after they have been switched off. Do not touch the glass cover. Avoid contact with your skin when cleaning.

⚠ Warning – Risk of electric shock!
When replacing the cooking compartment bulb, the bulb socket contacts are live. Before replacing the bulb, unplug the appliance from the mains or switch off the circuit breaker in the fuse box.

Cleaning function

⚠ Warning – Risk of fire!
- Loose food remnants, fat and meat juices may catch fire when the cleaning function is in progress. Before you start the cleaning function, always remove the worst of the food residues and remnants from the cooking compartment.Do not use the cleaning function for cleaning accessories.
- The appliance will become very hot on the outside during the cleaning function. Never hang combustible objects, e.g. tea towels, on the door handle. Do not place anything against the front of the appliance. Keep children away from the appliance.
- If the door seal is damaged, a large amount of heat will be generated around the door. Do not scrub or remove the seal. Never operate the appliance if the seal is damaged or missing.

⚠ Warning – Risk of serious harm to health!
The appliance becomes very hot when the cleaning function is in progress. The non-stick coating on baking trays and tins is destroyed and noxious gases are released. Never clean non-stick baking trays or baking tins using the cleaning function. In general, you must not use the cleaning function for cleaning accessories.

⚠ Warning – Risk of harm to health!
The cleaning function heats up the cooking compartment to a very high temperature so that food remnants left over from roasting, grilling and baking will burn off.This process releases vapours, which can irritate the mucous membranes. While the cleaning function is running, keep the kitchen well ventilated. Do not remain in the room for long periods. Keep children and pets away. Follow the instructions even when using the Delayed start function with a delayed end time.

⚠ Warning – Risk of burns!
- The cooking compartment becomes extremely hot during the cleaning function. Never open the appliance door. Allow the appliance to cool down. Keep children away from the appliance.
- ⚠ The appliance becomes very hot on the outside during the cleaning function. Never touch the appliance door. Allow the appliance to cool down. Keep children at a safe distance.

Causes of damage

Hob

Caution!

- Rough pan bases may scratch the hob.
- Avoid leaving empty pots and pans on the hotplate. Doing so may cause damage.
- Do not place hot pans on the control panel, the indicator area, or the hob frame. Doing so may cause damage.
- Hard or pointed objects dropped on the hob may damage it.
- Aluminium foil and plastic containers will melt if placed on the hotplate while it is hot. The use of laminated sheeting is not recommended on the hob.

Overview

You will find the most frequently caused damage in the following table:

Damage	Cause	Measure
Stains	Boiled over food.	Remove boiled over food immediately with a glass scraper.
	Unsuitable cleaning agent.	Only use cleaning agents that are suitable for this type of hob.
Scratches	Salt, sugar and sand.	Do not use the hob as a work surface or storage space.
	Cookware with rough bases scratch the hob.	Check the cookware.
Discolouration	Unsuitable cleaning agent.	Only use cleaning agents that are suitable for this type of hob.
	Pan abrasion.	Lift pots and pans when moving them.
Chips	Sugar, food with a high sugar content.	Remove boiled over food immediately with a glass scraper.

Damage to the oven

Caution!

- Accessories, foil, greaseproof paper or ovenware on the cooking compartment floor: do not place accessories on the cooking compartment floor. Do not cover the cooking compartment floor with any sort of foil or greaseproof paper. Do not place ovenware on the cooking compartment floor if a temperature of over 50 °C has been set. This will cause heat to accumulate. The baking and roasting times will no longer be correct and the enamel will be damaged.
- Aluminium foil: Aluminium foil in the cooking compartment must not come into contact with the door glass. This could cause permanent discolouration of the door glass.
- Water in a hot cooking compartment: do not pour water into the cooking compartment when it is hot. This will cause steam. The temperature change can cause damage to the enamel.
- Moisture in the cooking compartment: Over an extended period of time, moisture in the cooking compartment may lead to corrosion. Allow the cooking compartment to dry after use. Do not keep moist food in the closed cooking compartment for extended periods of time. Do not store food in the cooking compartment.
- Cooling with the appliance door open: Following operation at high temperatures, only allow the cooking compartment to cool down with the door closed. Do not trap anything in the appliance door. Even if the door is only left open a crack, the front of nearby furniture may become damaged over time. Only leave the cooking compartment to dry with the door open if a lot of moisture was produced whilst the oven was operating.
- Fruit juice: when baking particularly juicy fruit pies, do not pack the baking tray too generously. Fruit juice dripping from the baking tray leaves stains that cannot be removed. If possible, use the deeper universal pan.
- Extremely dirty seal: If the seal is very dirty, the appliance door will no longer close properly during operation. The fronts of adjacent units could be damaged. Always keep the seal clean. Never operate the appliance if the seal is damaged or missing. → *"Cleaning" on page 35*
- Appliance door as a seat, shelf or worktop: Do not sit on the appliance door, or place or hang anything on it. Do not place any cookware or accessories on the appliance door.
- Inserting accessories: depending on the appliance model, accessories can scratch the door panel when closing the appliance door. Always insert the accessories into the cooking compartment as far as they will go.
- Carrying the appliance: do not carry or hold the appliance by the door handle. The door handle cannot support the weight of the appliance and could break.
- Grilling: do not insert the baking tray or universal pan higher than level 3 when grilling. The high heat distorts it and the enamel may be damaged when it is removed. At level 4 and 5, only grill directly on the wire rack.

Damage to the plinth drawer

Caution!

Do not place hot objects in the plinth drawer. It could be damaged.

Environmental protection

Your new appliance is particularly energy-efficient. Here you can find tips on how to save even more energy when using the appliance, and how to dispose of your appliance properly.

Saving energy

- Only preheat the appliance if this is specified in the recipe or in the tables in the operating instructions.
- Leave frozen food to defrost before placing it in the cooking compartment.

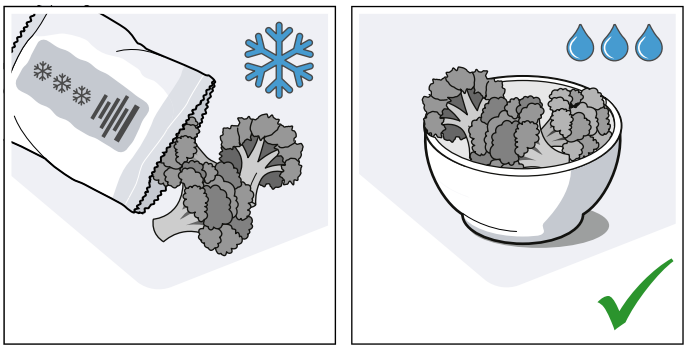

- Use baking tins that are dark-coloured, painted black or have an enamel coating. These absorb the heat particularly well.

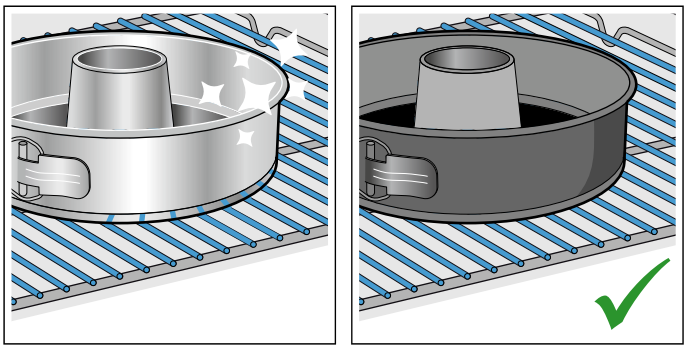

- Remove any unnecessary accessories from the cooking compartment.

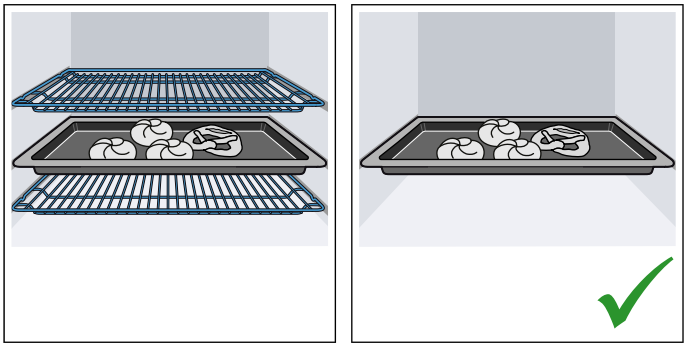

- Open the appliance door as infrequently as possible when the appliance is in use.

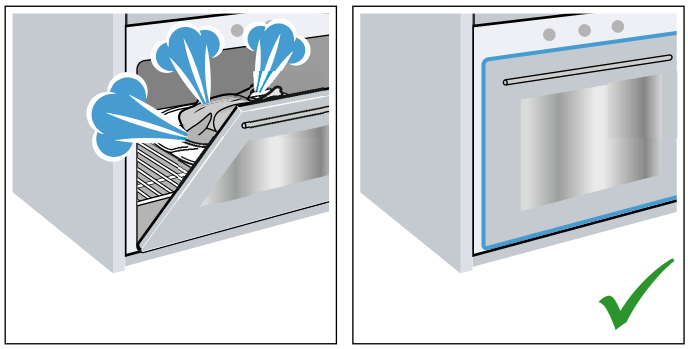

- It is best to bake several cakes one after the other. The cooking compartment stays warm. This reduces the baking time for the second cake. You can place two cake tins next to each other in the cooking compartment.

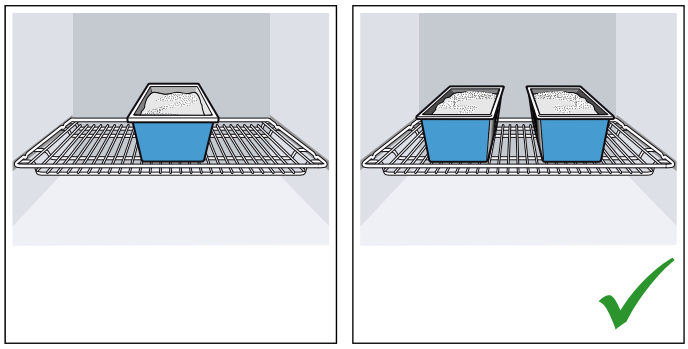

- For longer cooking times, you can switch the appliance off 10 minutes before the end of the cooking time and use the residual heat to finish cooking.

Energy-saving advice

- Always use the correct lid for each pan. Cooking without a lid uses a lot more energy. Use a glass lid to provide visibility and avoid having to lift the lid.
- Use pans with flat bases. Bases that are not flat use a lot more energy.
- The diameter of the pan base must match the size of the hotplate. Please note: pan manufacturers usually provide the diameter for the top of the pan, which is usually larger than the diameter of the pan base.
- Use a small pan for small amounts of food. A large pan which is not full uses a lot of energy.
- Use little water when cooking. This saves energy and preserves all the vitamins and minerals in vegetables.
- Select the lowest power level to maintain cooking. If the power level is too high, energy is wasted.

Environmentally-friendly disposal

Dispose of packaging in an environmentally-friendly manner.

This appliance is labelled in accordance with European Directive 2012/19/EU concerning used electrical and electronic appliances (waste electrical and electronic equipment - WEEE). The guideline determines the framework for the return and recycling of used appliances as applicable throughout the EU.

Induction cooking

Advantages of induction cooking

Induction cooking is very different from traditional cooking methods, as heat builds up directly in the item of cookware. This offers numerous advantages:

- Saves time when boiling and frying.
- Saves energy.
- Easier to care for and clean. Spilled food does not burn on as quickly.
- Heat control and safety – the hob increases or decreases the heat supply as soon as the user changes the setting. The induction hotplate stops the heat supply as soon as the cookware is removed from the hotplate, without having to switch it off first.

Cookware

Only use ferromagnetic cookware for induction cooking, such as:

- Cookware made from enamelled steel
- Cookware made from cast iron
- Special induction-compatible cookware made from stainless steel.

To check whether your cookware is suitable for induction cooking, refer to the section on
→ *"Cookware check"*.

To achieve a good cooking result, the ferromagnetic area on the base of the pan should match the size of the hotplate. If a hotplate does not detect an item of cookware, try placing it on another hotplate with a smaller diameter.

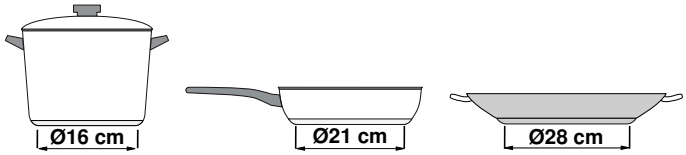

Some induction cookware does not have a fully ferromagnetic base:

- If the base of the cookware is only partially ferromagnetic, only the area that is ferromagnetic will heat up. This may mean that heat will not be distributed evenly. The non-ferromagnetic area may not heat up to a sufficient temperature for cooking.

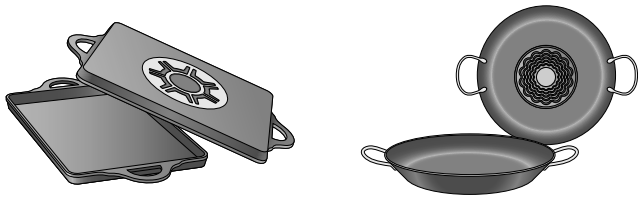

- The ferromagnetic area will also be reduced if the material from which the base of the cookware is made contains aluminium, for example. This may mean that the cookware will not become sufficiently hot or even that it will not be detected.

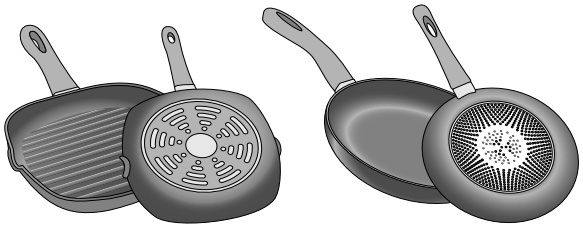

Unsuitable pans

Never use diffuser hobs or pans made from:

- common thin steel
- glass
- earthenware
- copper
- aluminium

Properties of the base of the cookware

The material(s) from which the base of the cookware is made can affect the cooking result. Using pots and pans made from materials that distribute heat evenly through them, such as stainless-steel pans with a three-layer base, saves time and energy.

Use cookware with a flat base; if the base of the cookware is uneven, this may impair the heat supply.

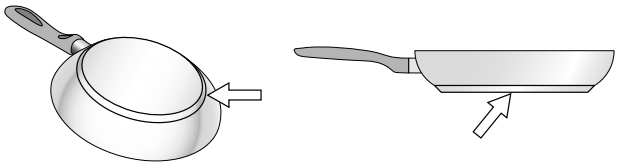

Absence of pan or unsuitable size

If no pan is placed on the selected hotplate, or if it is made of unsuitable material or is not the correct size, the power level displayed on the hotplate indicator will flash. Place a suitable pan on the hotplate to stop the flashing. If this takes more than 90 seconds, the hotplate will switch off automatically.

Empty pans or those with a thin base

Do not heat empty pans, nor use pans with a thin base. The hob is equipped with an internal safety system. However, an empty pan may heat up so quickly that the "automatic switch off" function may not have time to react and the pan may reach very high temperatures. The base of the pan could melt and damage the glass on the hob. In this case, do not touch the pan and switch the hotplate off. If it fails to work after it has cooled down, please contact the Technical Assistance Service.

Pan detection

Each hotplate has a lower limit for pan detection. This depends on the diameter of the ferromagnetic area of the cookware and the material from which its base is made. For this reason, you should always use the hotplate that best matches the diameter of the base of the pan.

Installation and connection

Do not install the appliance behind a decorative door or the door of a kitchen unit, as this may cause the appliance to overheat.

Electrical connection

Only licensed specialists may connect the appliance.It is important that you comply with the requirements of your electricity supplier.

Any damage arising from the appliance being connected incorrectly will invalidate the warranty.

Caution!

Your appliance comes with the enclosed cable for permanently connecting it to the mains electricity supply.
Except in the event of damage, never remove the cable from the appliance or replace it with another cable (with or without plug).

Caution!

If the supply cord is damaged, it must be replaced by the manufacturer, its service agent or similarly qualified persons in order to avoid a hazard.

⚠ Warning – Danger of death!

There is a risk of electric shock if you touch live components.

- Always make sure your hands are dry when you touch or hold the mains plug.
- Only pull out the mains cable by taking hold of the plug and removing the plug; never pull it out by the mains cable itself, as this could damage it.
- Never unplug the mains plug when the appliance is in operation.

Please note the following information and ensure that:

Notes

- The mains plug fits the socket.
- The cable cross section is adequate.
- The earthing system is properly installed.
- The mains cable is only replaced by a qualified electrician (if this is necessary).Spare mains cables can be ordered from our after-sales service.
- No power strips/multi-way connectors or extension cables are used.
- If using a residual current device, only use one that bears the mark ⊠.
  The presence of this mark is the only way to be sure that it fulfils all the applicable regulations.
- The mains plug can be accessed at all times.
- The mains cable is not kinked, crushed, modified or severed.
- The mains cable does not come into contact with heat sources.

For the after-sales service

Caution!

- The appliance must be connected in accordance with the data on the rating plate.
- Only connect the appliance to an electrical connection that meets the applicable provisions. The socket must be easily accessible so that you can disconnect the appliance from the electricity supply if necessary.
- Please ensure the availability of a multi-pin disconnecting system.
- Never use extension cables or multiple plugs.
- For safety reasons, this appliance must only be connected to an earthed connection. If the safety earth terminal does not comply with regulations, safety against electrical hazards is not guaranteed.
- An all-pole isolating switch with a contact gap of at least 3 mm must be present in the installation circuit. This is not necessary if the appliance is connected by a plug that is accessible to the user.
- Electrical safety: The cooker corresponds to safety class I and may only be used in conjunction with a safety earth terminal.
- You must use a H 05 W-F type cable or equivalent for the appliance connection.

The mains voltage must correspond to the voltage specified on the rating plate.

Caution!

All appliances with a three-wire cable must be earthed.

Connect the wires in the power cord according to the colour coding:

Explanaions	
Green and yellow	earth wire ⏚
Blue	(null) neutral wire
Brown	phase (external conductor)

Note: If the power cord is replaced
Only connect it to the appliance as shown in the connection diagram.

Removing the appliance

Disconnect the appliance from the mains power supply.

⚠ **Warning – Risk of electric shock !**
When disconnecting the appliance from the mains, the connections may cause residual voltages. Only allow a professional to connect the appliance.

Levelling the cooker

Always place the cooker directly on the floor.

The cooker has height-adjustable feet. This allows you to raise the plinth by about 15 mm. Please observe the special installation instructions.

Adjacent units

Any adjacent units must not be made of flammable materials. The fronts of any adjacent units must be heat-resistant up to at least 90 °C.

Wall fixing

To prevent the cooker from tipping over, you must fix it to the wall using the enclosed bracket. Please observe the installation instructions for fixing the oven to the wall.

Measures to be noted during transport

Secure all mobile parts in and on the appliance using an adhesive tape that can be removed without leaving any traces. Push all accessories (e.g. baking tray) into the corresponding slots with cardboard at the edges, in order to avoid damaging the appliance. Place cardboard or similar between the front and rear side to prevent knocks against the inside of the glass door. Secure the door and, if available, the top cover to the appliance sides using adhesive tape.

Keep the original appliance packaging. Only transport the appliance in the original packaging. Observe the transport arrows on the packaging.

If the original packaging is no longer available

pack the appliance in protective packaging to guarantee sufficient protection against any transport damage.

Transport the appliance in an upright position. Do not hold the appliance by the door handle or the connections on the rear, as these could be damaged. Do not place any heavy objects on the appliance.

Getting to know your appliance

In this section, we will explain the indicators and controls. You will also find out about the various functions of your appliance.

General information

The design depends on the respective appliance model.

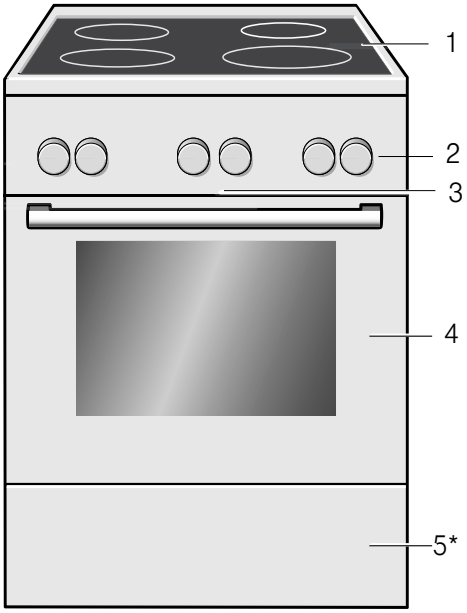

Explanations	
1	Hob**
2	Control panel**
3*	Cooling fan
4	Oven door**
5*	Plinth drawer**
*	Optional (available for some appliances)
**	Details may vary depending on the appliance model.

Note: Depending on the appliance model, individual details and colours may differ.

Cooking area

Here is an overview of the control panel. The design depends on the respective appliance model.

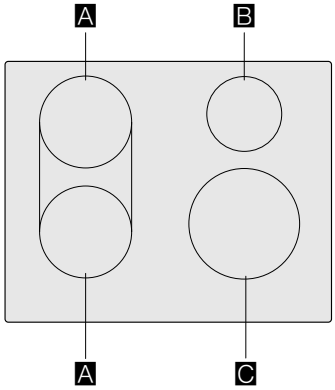

			9*	b*
A	Ø 18		1.800 W	3.100 W
	Ø 18 + 18		3.600 W	
B	Ø 14,5		1.400 W	2.200 W
C	Ø 21		2.200 W	3.700 W

* IEC 60335-2-6

The control panel

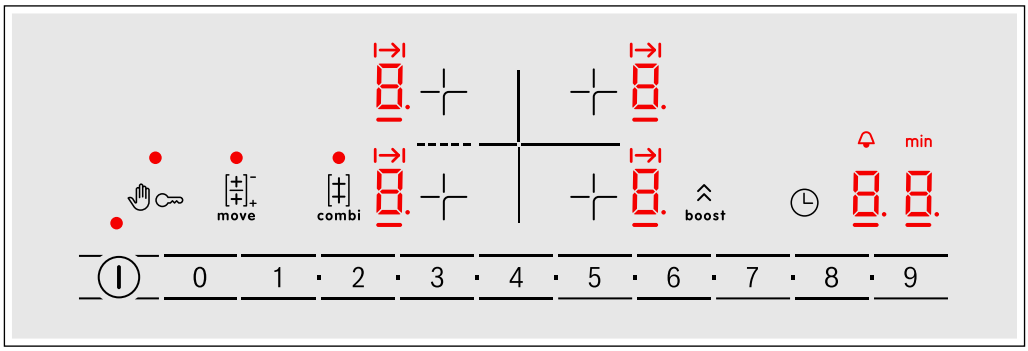

Controls	
⏻	Main switch
⊹	Selecting a hotplate
0 1■2■...8■9	Settings area
✋	Locking the control panel for cleaning
⊶	Childproof lock
combi	Combi zone function
move	Move function
boost	PowerBoost functions
◷	Timer function

Indicators	
0	Operating status
1-9	Heat settings
00	Timer function

Indicators	
H/h	Residual heat
b	PowerBoost function
I→I	Setting the cooking time
🔔	Timer
min	Time display

Touch controls

Touching a symbol activates the associated function.

Notes

- Always keep the control panel clean and dry. Moisture reduces its effectiveness.
- Do not place any cookware near the indicators or sensors. The electronics could overheat.

The hotplates

Cooking zones		
○	Single cooking zone	Use cookware that is a suitable size
⁘	Combined cooking zone	See the section entitled ⟶ *"CombiZone function"* or ⟶ *"Move function"*
Only use cookware that is suitable for induction cooking; see the section entitled ⟶ *"Induction cooking"*		

Residual heat indicator

The hob has a residual heat indicator for each hotplate. This indicates that a hotplate is still hot. Do not touch a hotplate while the residual heat indicator is lit up.

The following indicators are shown depending on the amount of residual heat:

- Display H: High temperature
- Display h: Low temperature

If you remove the cookware from the hotplate during cooking, the residual heat indicator and the selected heat setting will flash alternately.

When the hotplate is switched off, the residual heat indicator will light up. Even after the hob has been switched off, the residual heat indicator will stay lit for as long as the hotplate is still warm.

Control panel

Details may vary depending on the appliance model.

Control knobs

The control knobs can be pushed in and remain pressed down when they are in the "out" position. Press down on the control knob again to release it back up.

Buttons and display

You can use the buttons to set various additional functions on your appliance. You will be able to see the values for these on the display.

Symbol		Meaning
	Time-setting options	Tap the symbol repeatedly to select the time, timer, duration and end time.
–	Minus	Reduce setting values.
+	Plus	Increase setting values.
	Interior lighting	Switch the interior lighting on or off.
	Rapid heating	Start or cancel Rapid heating for the cooking compartment.
	Childproof lock	Lock and unlock the oven functions on the control panel.

Display

The cooking compartment temperature you set using the temperature selector will be shown on the display.

In addition, you can read the settings for the time-setting options. The value that can be set at the present time or that is elapsing will be shown in large digits on the display. To use the individual time-setting options, touch the button several times.If there is a red bar above or below a symbol, this means that the value being shown in large digits on the display refers to the function that this symbol represents.

Types of heating and functions

Use the function selector to set the types of heating and other functions.

To make sure you always use the right type of heating to cook your food, we have explained the differences and applications below.

Type of heating		Temperature	Use
	3D hot air	30-275 °C	For baking and roasting on one or more levels. The fan distributes the heat from the ring heating element in the back panel evenly around the cooking compartment.
	Gentle hot air	125-275 °C	For gently cooking selected types of food on one level without preheating. The fan distributes the heat from the ring-shaped heating element in the back panel around the cooking compartment. This heating function is used to measure both the energy consumption in air recirculation mode and the energy efficiency class.
	Pizza setting	30-275 °C	For cooking pizza and dishes that require a lot of heat from underneath. The bottom heating element and the ring heating element in the back panel heat up.
	Bottom heating	30-300 °C	For cooking in a bain marie and for baking food for extra time. Heat is emitted from below.
	Keep-warm	60-100 °C	For keeping cooked food warm.
	Defrost	30-60 °C	For gently defrosting frozen food.
	Slow cook	70-120 °C	For gentle and slow cooking of seared, tender pieces of meat in ovenware without a lid. Heat is emitted evenly from above and below at low temperatures.
	Grill, large area	Grill settings: 1 = low 2 = medium 3 = high	For grilling flat items, such as steaks or sausages, for making toast, and for browning food. The whole area below the grill element becomes hot.
	Hot air grilling	30-300 °C	For roasting poultry, whole fish and larger pieces of meat. The grill element and the fan switch on and off alternately. The fan circulates the hot air around the food.
	Top/bottom heating	30-300 °C	For traditional baking and roasting on one level. Especially suitable for cakes with moist toppings. Heat is emitted evenly from above and below. This heating function is used to measure the energy consumption in the conventional mode.

Note: For each heating function, the appliance specifies a default temperature or level. You can accept this value or change it in the appropriate area.

Other functions

Your new oven has yet more functions; see below for a brief description of these.

Function		Use
	Programmes	For many types of food, the appliance has preprogrammed setting values that you can use. → *"Programmes" on page 46*
	Pyrolytic self-cleaning	The pyrolytic self-cleaning function cleans the cooking compartment almost by itself. → *"Cleaning function" on page 37*

Temperature

Use the temperature selector to set the temperature in the cooking compartment. It can also be used to select the grill and cleaning settings, for example.

The settings appear in the display.

Notes

- The temperature can be set in 1-degree increments up to 100 °C, and in 5-degree increments thereafter.
- For grill setting 3, the appliance lowers the setting to grill setting 1 after approx. 20 minutes.

Temperature indicator

The line at the bottom of the display turns red from left to right as the cooking compartment heats up.

When you are preheating the appliance, the optimal time to place your food in the cooking compartment is as soon as the entire line has turned red.

Residual heat
When the appliance is switched off, the temperature indicator shows the residual heat in the cooking compartment. The lower the temperature drops, the shorter the line.

Notes

- The temperature indicator only shows the increasing temperature for heating functions for which a temperature is set. For grill settings, for example, the indicator shows a full line from the beginning.
- If the temperature in the cooking compartment is too high when the appliance is started, h will appear on the display for some heating functions. Switch off the appliance and allow it to cool down before switching it back on again.
- Due to thermal inertia, the actual temperature inside the cooking compartment may differ slightly from the temperature that is displayed.

Cooking compartment

Various functions in the cooking compartment make your appliance easier to use. For example, the cooking compartment is well lit and a cooling fan prevents the appliance from overheating.

Opening the appliance door

If you open the appliance door when the appliance is in operation, the appliance will continue to operate as before.

Interior lighting

With most heating functions and other functions, the interior lighting in the cooking compartment will remain lit while the oven is in operation. Once the oven has finished cooking the food, the lighting will go out.

By pressing the button for the interior lighting, you can switch on the lighting without heating the oven. This makes it easier to clean your appliance, for example.

Cooling fan

The cooling fan switches on and off as required. The hot air escapes above the door.

Caution!

Do not cover the ventilation slots. Otherwise, the appliance may overheat.

So that the cooking compartment cools down more quickly after operation, the cooling fan continues to run for a certain period afterwards.

Accessories

Your appliance is accompanied by a range of accessories. Here, you can find an overview of the accessories included and information on how to use them correctly.

Accessories included

Your appliance is equipped with the following accessories:

	Wire rack For ovenware, cake tins and ovenproof dishes. For roasts, grilled items and frozen meals.
	Baking tray For tray bakes and small baked products.
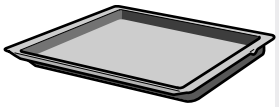	**Universal pan** For moist cakes, pastries, frozen meals and large roasts. It can be used to catch dripping fat when you are grilling directly on the wire rack.
	Grill tray Use for grilling in place of the wire rack or as a splatter guard. Only use in the universal pan.

Only use original accessories. They are specially adapted for your appliance.

You can buy accessories from the after-sales service, from specialist retailers or online.

Note: The accessories may deform when they become hot. This does not affect their function. Once they have cooled down again, they regain their original shape.

Inserting accessories

The cooking compartment has five shelf positions. The shelf positions are counted from the bottom up.

In some appliances, the highest shelf position is marked on the cooking compartment by the grill symbol.

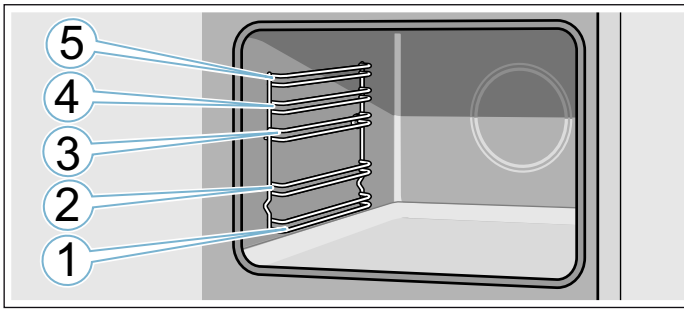

Always insert accessories between the two guide rods for the shelf position.

Accessories can be pulled out approximately halfway without tipping.

When sliding accessories into the cooking compartment, ensure that the kink in the side rail is at the back. Only then will they lock in place.

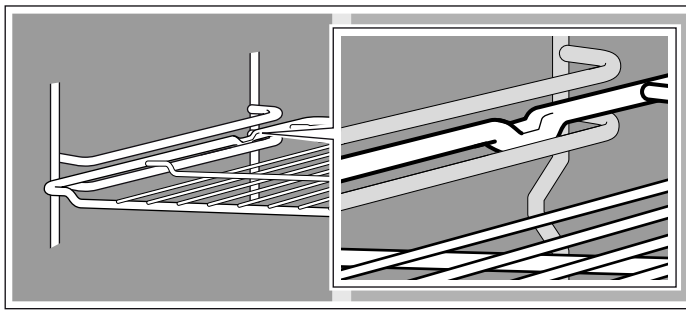

Notes

- Hold the baking tray securely at the sides with both hands and slide it into the shelf supports, keeping it parallel. Do not move the baking tray from side to side as you slide it in, otherwise it will not go in easily and the enamelled surfaces may be damaged.
- Make sure that you always insert the accessories into the cooking compartment the right way round.
- Always insert the accessories fully into the cooking compartment so that they do not touch the appliance door.
- Take any accessories that you will not be using out of the cooking compartment.

Optional accessories

You can buy optional accessories from our after-sales service, from specialist retailers or online. You will find a comprehensive range of products for your appliance in our brochures and online.

Their availability and whether it is possible to order them online varies from country to country. See your sales brochures for more details.

Note: Not all optional accessories are suitable for every appliance. When purchasing, always quote the exact product number (E no.) of your appliance.
→ *"Customer service" on page 45*

Optional accessories
Wire rack For cookware, cake tins and ovenproof dishes, and for roasts and grilled food.
Baking tray For tray bakes and small baked items.
Universal pan For moist cakes, baked items, frozen food and large roasts. It can be used to catch dripping fat when you are grilling directly on the wire rack.
Wire insert For meat, poultry and fish. For inserting into the universal pan to catch dripping fat and meat juices.

Professional pan For preparing large quantities of food. Also ideal for moussaka, for example.
Lid for the professional pan The lid turns the professional pan into a professional roasting dish.
Pizza tray For pizzas and large round cakes.
Grill tray Use for grilling in place of the wire rack or as a splatter guard. Use in the universal pan only.
Baking stone For home-made bread, bread rolls and pizzas that you wish to have a crispy base. The baking stone must be preheated to the recommended temperature.
Glass roasting dish For stews and bakes.
Glass pan For bakes, vegetable dishes and baked items.
Pull-out system, one level Fitting pull-out rails at position 2 will allow you to pull accessories out further without them tipping.
Pull-out system, two levels Fitting pull-out rails at positions 2 and 3 will allow you to pull accessories out further without them tipping.
Pull-out system, three levels Fitting pull-out rails at positions 1, 2 and 3 will allow you to pull accessories out further without them tipping.

Before using for the first time

Before you can use your new appliance, you must make some settings. You must also clean the cooking compartment and accessories.

Initial use

The time will appear on the display once the appliance is connected to the power supply. Set the current time.

Setting the time

Make sure that the function selector is set to the "Off" position.

The time starts at "12:00".

1. Use the − or + button to set the time.
2. Touch the ⏲ button to confirm.

The current time will be shown on the display.

Cleaning the cooking compartment and accessories

Before using the appliance to prepare food for the first time, you must clean the cooking compartment and accessories.

Cleaning the cooking compartment

To eliminate the new-appliance smell, heat up the cooking compartment when it is empty and with the oven door closed.

Make sure that there is no leftover packaging, such as polystyrene pellets, in the cooking compartment and remove the adhesive tape that is in or on the appliance. Before heating the appliance, wipe the smooth surfaces in the cooking compartment with a soft, damp cloth. Keep the kitchen ventilated while the appliance is heating.

Apply the settings indicated below. You can find out how to set the heating function and the temperature in the next section. → *"Operating the appliance" on page 19*

Settings	
Heating function	3D Hotair
Temperature	maximum
Time	1 hour

Switch off the appliance after the time indicated.

Once the cooking compartment has cooled down, clean the smooth surfaces with soapy water and a dish cloth.

Cleaning the accessories

Clean the accessories thoroughly using soapy water and a dish cloth or soft brush.

Operating the appliance

This chapter explains how to set a hotplate. The table shows heat settings and cooking times for various meals.

Switching the hob on and off

The main switch is used to switch the hob on and off.

To switch on: Touch the ⏻ symbol. An audible signal sounds. The indicator next to the main switch and the hotplate indicators 0 light up. The hob is ready to use.

To switch off: Touch the ⏻ symbol until the indicator goes out. All hotplates are switched off. The residual heat indicator remains lit until the hotplates have cooled down sufficiently.

Notes

- The hob will automatically switch itself off if all hotplates have been switched off for more than 20 seconds.
- The settings are stored for 4 seconds after the hob has been switched off. If you switch the hob back on during this time, the hob will operate using the stored settings.
- The maximum output of the hob depends on the type of mains connection used. In order not to exceed the maximum output limit, the hob automatically distributes the power available between the hotplates that are switched on. The output of a hotplate can be temporarily decreased to below the setpoint while the Power Management function is active.

Setting a hotplate

Set the required heat setting using symbols 1 to 9.

Heat setting 1 = lowest setting.

Heat setting 9 = highest setting.

Every heat setting has an intermediate setting. This intermediate setting is marked in the control panel with the ■ symbol.

Notes

- To protect the fragile parts of your appliance from overheating and electrical overloading, the hob may temporarily reduce the power.
- In order to prevent the appliance from producing excess noise, the hob may temporarily reduce the power.

Selecting a hotplate and heat setting

The hob must be switched on.

1. Touch the ⊹ symbol for the required hotplate. The 0 symbol lights up and the _ symbol underneath.
2. Then select the required heat setting from the settings range.

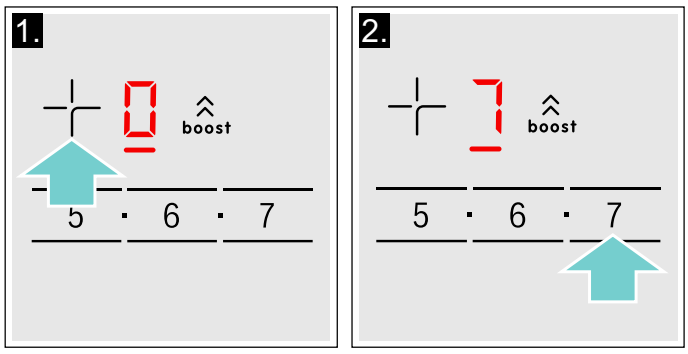

The heat setting is set.

Changing the heat setting

Select the hotplate and then set the required heat setting in the control panel.

Switch off the hotplate

Select the hotplate and set it to 0 in the programming panel. The hotplate turns off and the residual heat indicator appears.

Notes

- If no pan has been placed on the hotplate, the selected power level flashes. After a certain time has elapsed, the hotplate switches off.
- If a pan has been placed on the hotplate before switching on the hob, it will be detected within 20 seconds of pressing the main switch and the hotplate will be selected automatically. Once detected, select the power level within the next 20 seconds or the hotplate will switch off. If more than one pan is placed on the hob, only one will be detected when switching it on.

Chef's recommendations

Recommendations

- When heating up puree, cream soups and thick sauces, stir occasionally.
- Set heat setting 8 to 9 for preheating.
- When cooking with the lid on, turn the heat setting down as soon as steam escapes between the lid and the cookware. Steam does not need to escape for a good cooking result.
- After cooking, keep the lid on the cookware until you serve the food.
- To cook with the pressure cooker, observe the manufacturer's instructions.
- Do not cook food for too long, otherwise the nutrients will be lost. The kitchen clock can be used to set the optimum cooking time.
- For a more healthy cooking result, smoking oil should be avoided.
- To brown food, fry small portions in succession.
- Cookware may reach high temperatures while the food is cooking. We recommend that you use oven gloves.
- You can find recommendations for energy-efficient cooking in section ⟶ *"Environmental protection"*

Cooking table

The table shows which heat setting is suitable for each type of food. The cooking time may vary depending on the type, weight, thickness and quality of the food.

	Heat setting	Cooking time (mins)
Melting		
Chocolate coating	1 - 1.	-
Butter, honey, gelatine	1 - 2	-
Heating and keeping warm		
Stew, e.g. lentil stew	1. - 2	-
Milk*	1. - 2.	-
Heating sausages in water*	3 - 4	-
Defrosting and heating		
Spinach, frozen	3 - 4	15 - 25
Goulash, frozen	3 - 4	35 - 55
Poaching, simmering		
Potato dumplings*	4. - 5.	20 - 30
Fish*	4 - 5	10 - 15
White sauces, e.g. Béchamel sauce	1 - 2	3 - 6
Whisked sauces, e.g. sauce béarnaise, hollandaise	3 - 4	8 - 12
Boiling, steaming, braising		
Rice (with double the volume of water)	2. - 3.	15 - 30
Rice pudding***	2 - 3	30 - 40
Unpeeled boiled potatoes	4. - 5.	25 - 35
Boiled potatoes	4. - 5.	15 - 30
Pasta, noodles*	6 - 7	6 - 10
Stew	3. - 4.	120 - 180
Soups	3. - 4.	15 - 60
Vegetables	2. - 3.	10 - 20
Vegetables, frozen	3. - 4.	7 - 20
Cooking in a pressure cooker	4. - 5.	-
Braising		
Roulades	4 - 5	50 - 65
Pot roast	4 - 5	60 - 100
Goulash***	3 - 4	50 - 60

* Without lid
** Turn several times
*** Preheat to heat setting 8 - 8.

	Heat setting	Cooking time (mins)
Roasting/frying with little oil*		
Escalope, plain or breaded	6 - 7	6 - 10
Escalope, frozen	6 - 7	6 - 12
Chop, plain or breaded**	6 - 7	8 - 12
Steak (3 cm thick)	7 - 8	8 - 12
Poultry breast (2 cm thick)**	5 - 6	10 - 20
Poultry breast, frozen**	5 - 6	10 - 30
Rissoles (3 cm thick)**	4. - 5.	20 - 30
Hamburgers (2 cm thick)**	6 - 7	10 - 20
Fish and fish fillet, plain	5 - 6	8 - 20
Fish and fish fillet, breaded	6 - 7	8 - 20
Fish, breaded and frozen, e.g. fish fingers	6 - 7	8 - 15
Scampi, prawns	7 - 8	4 - 10
Sautéeing fresh vegetables and mushrooms	7 - 8	10 - 20
Stir-fry, vegetables, meat cut in Asian-style strips	7 - 8	15 - 20
Frozen dishes, e.g. roasted dishes	6 - 7	6 - 10
Pancakes (baked in succession)	6. - 7.	-
Omelette (cooked in succession)	3. - 4.	3 - 10
Fried eggs	5 - 6	3 - 6
Deep-fat frying* (150-200 g per portion in 1-2 l oil, deep-fat fried in portions)		
Frozen products, e.g. chips, chicken nuggets	8 - 9	-
Croquettes, frozen	7 - 8	-
Meat, e.g. chicken portions	6 - 7	-
Fish, breaded or in beer batter	6 - 7	-
Vegetables, mushrooms, breaded or battered, tempura	6 - 7	-
Small baked items, e.g. doughnuts, fruit in batter	4 - 5	-

* Without lid
** Turn several times
*** Preheat to heat setting 8 - 8.

CombiZone function

Using this function, the two left hotplates, which are the same size, can be linked together. When doing this, the same heat setting is set for both hotplates. This is especially suitable for cooking with elongated cookware.

Notes regarding cookware

To achieve the best results, use suitable, oval cookware in the area of both hotplates. Position the cookware in the middle of the hotplates.

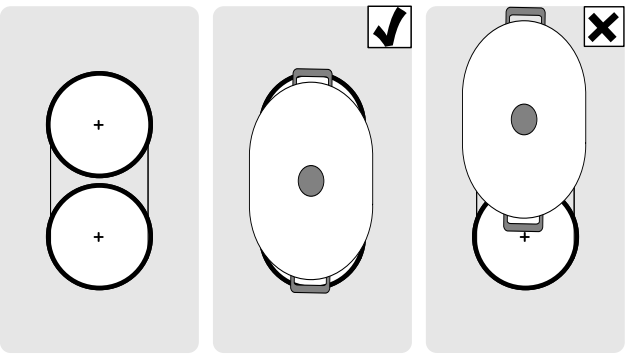

When you are using cookware on just one of the two hotplates, it can be moved to the second hotplate. In this case, the heat setting and the selected settings are transferred.

Activation

The hob must be switched on.

1. Select one of the two hotplates which are included in the combi zone and set the heat setting.
2. Touch the [+] combi symbol. The ● indicator lights up. The heat setting appears in the display for the lower hotplate.

The function is activated.

Changing the heat setting

Select one of the two hotplates in the Combi zone and change the heat setting in the setting range.

Deactivating

Select one of the two hotplates assigned to this function and touch the [+] combi symbol.

The function has been deactivated. The two hotplates will now function independently.

Move function

You can use this function to link the two left hotplates, which are the same size, and select a different heat setting for each hotplate. Preset heat settings:

Front hotplate = heat setting 9

Rear hotplate = heat setting 1.

The heat settings can be changed independently of one another for each hotplate.

Notes

- Only place cookware on one of the hotplates. The function will not be activated if there is cookware on each of the two hotplates.
- The heat setting is less brightly lit on the display for the hotplate on which there is no cookware. It will not be activated until the cookware is moved to this hotplate and is detected.
- If the function has already been activated and a second piece of cookware is placed on the free hotplate, the display lights up less brightly, as before. The hotplate is not active. The hotplate is activated when the first piece of cookware is removed.

Advice on using cookware

To ensure that the cookware is detected and heat is distributed evenly, correctly centre the cookware:

Only use one piece of cookware which only covers one hotplate.

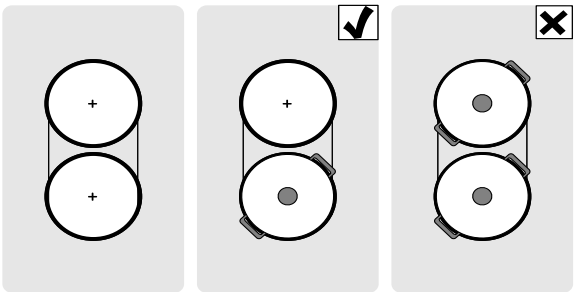

Moving the cookware from one hotplate to another:

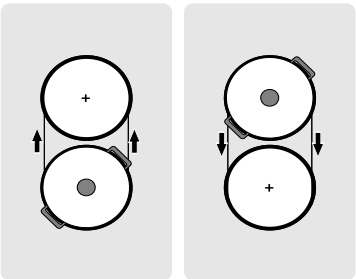

Activation

Combine the two hotplates which each have different heat settings.

1. Select one of the two hotplates which are included in the move function.
2. Touch the move symbol. The ● indicator lights up. The heat settings appear in the displays for the two hotplates.

The function is activated.

Notes

- The display for the hotplate on which the cookware is placed lights up more brightly.
- The _ indicator lights up on the display for the hotplate that is still selected.

Changing the heat setting

Select one of the two hotplates which are included in the move function and change the heat setting in the settings range.

Note: If the function is deactivated, the heat settings return to the preset values

Deactivation

Touch the move symbol.

The function is deactivated.

Note: When one of the two hotplates is set to 0, the function is deactivated within approx. 10 seconds.

Time-setting options

Your hob has two timer functions:

- Programming the cooking time
- Kitchen timer

Programming the cooking time

The hotplate automatically switches off after the time that is set has elapsed.

Setting procedure:

1. Select the hotplate and the required heat setting.
2. Touch the ◷ symbol. I→I lights up on the display for the hotplate. 00 lights up on the timer display.
3. Within the next 10 seconds, set the required cooking time in the settings range.

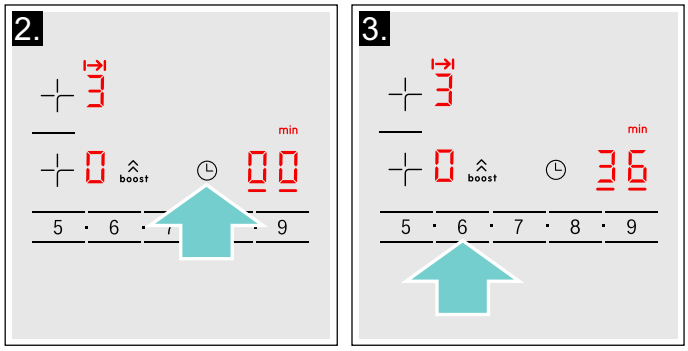

After a few seconds, the time begins to elapse.

Notes

- The same cooking time can be set automatically for all hotplates. The set time for each of the hotplates counts down independently from the others. You can find information on automatically programming the cooking time in section → *"Basic settings"*
- If the Combi Zone or Move function is selected for the combined hotplate, the set time for both hotplates is the same.

Changing or cancelling the time

Select the hotplate and then press the ◷ symbol.

Change the cooking time using the programming zone or set to 00 in order to cancel the time.

Once the time has elapsed

The hotplate switches off. A warning signal sounds. The time program function lights up 00 for 10 seconds in the display.

When the ◷ symbol is pressed, the indications turn off and the beeping stops.

Notes

- To set a cooking time of under 10 minutes, always touch **0** before you select the required value.
- If a cooking time was programmed for several hotplates, the time information for the selected hotplate is shown in the timer display.
- Select the relevant hotplate to call up the remaining cooking time.
- You can set a cooking time of up to 99 minutes.

The kitchen timer

You can use the kitchen timer to set a time of up to 99 minutes.

This functions independently from the hotplates and from other settings. This function does not automatically switch off a hotplate.

Setting

1. Touch the ◷ symbol repeatedly until the 🔔 indicator lights up. 00 lights up on the timer display.
2. Set the desired time in the settings area.

After a few seconds, the time begins to elapse.

Changing or deleting the time

Touch the ◷ symbol repeatedly until the 🔔 indicator lights up.

Change the time in the settings area or set 00 in order to delete the programmed time.

When the time has elapsed

An audible signal sounds. 00 appears on the timer display and the 🔔 indicator lights up. The displays go out after 10 seconds.

When the ◷ symbol is touched, the displays go out and the audible signal ceases.

PowerBoost function

The PowerBoost function enables you to heat up large quantities of water faster than when using heat setting 9.

The function can be used by any hotplate provided that no other hotplates are switched on. Otherwise b and 9 will flash in the heat setting display.

Activation

1. Select a hotplate.
2. Touch the boost symbol.
   b lights up on the display.

The function is activated.

Notes

- If a hotplate is switched on while the PowerBoost function is active, b and 9 will flash on the heat setting display; heat setting 9 will then be applied automatically. The PowerBoost function will now be deactivated.
- In the combi zone, the PowerBoost function can only be activated if the two hotplates are being used independently of each other.

Deactivation

1. Select the hotplate.
2. Touch the boost symbol.
   The b display goes out and the hotplate switches back to the 9 heat setting.

The function is deactivated.

Note: In certain circumstances, the PowerBoost function can switch itself off automatically in order to protect the electronic elements inside the hob.

Childproof lock

You can use the childproof lock to prevent children from switching on the hob.

Activating and deactivating the childproof lock

The hob must be switched off.

To activate: Touch the symbol for approx. 4 seconds. The symbol lights up for 10 seconds. The hob is locked.

To deactivate: Touch the symbol for approx. 4 seconds. The lock is released.

Childproof lock

With this function, the childproof lock automatically activates when a hob is switched off.

Switching on and off

You can find out how to switch the automatic childproof lock on in the → *"Basic settings"* section

Wipe protection

If you wipe over the control panel while the hob is switched on, settings may be altered. To avoid doing this, you can use the hob's "Lock control panel for cleaning" function.

To switch on: Touch the symbol. An audible signal sounds. The control panel is locked for 35 seconds. You can now wipe over the surface of the control panel without altering any settings.

To deactivate: The control panel will be unlocked once 35 seconds have elapsed. To release the function early, touch the symbol.

Notes

- An audible signal sounds 30 seconds after activation. This indicates that the function is about to finish.
- The cleaning lock does not lock the main switch. The hob can be switched off at any time.

Automatic safety cut-out

If a hotplate operates for an extended period and no settings are changed, the automatic safety shut-off is activated.

The hotplate stops heating. F, 8 and the residual heat indicator h or H flash alternately in the hotplate display.

When you touch any symbol, the display switches off. The hotplate can now be set again.

The point at which the safety shut-off becomes active depends on which heat setting has been set (after 1 to 10 hours).

Basic settings

The appliance has various basic settings. These basic

Indicator/ symbol	Function
c 1	**Childproof lock** 0 Manual*. 1 Automatic. 2 Function deactivated.
c2	**Signal tones** 0 Confirmation and fault signals are switched off. 1 Only the fault signal is switched on. 2 Only the confirmation signal is switched on. 3 All signal tones are switched on.*
c3	**Display energy consumption** 0 Deactivated.* 1 Activated.
c5	**Automatically programming the cooking time** 00 Switched off.* 01-99 Time until automatic switch-off.
c6	**Audible signal duration for the timer function** 1 10 seconds.* 2 30 seconds. 3 1 minute.
c7	**Power management function. Limiting the total power of the hob** **The available settings depend on the maximum power of the hob.** 0 Deactivated. Maximum power of the hob. * 1 1000 W minimum power. 1. 1500 W ... 3 3000 W recommended for 13 A. 3. 3500 W recommended for 16 A. 4 4000 W 4. 4500 W recommended for 20 A. ... 9 or 9. Maximum power of the hob.
c9	**Time for selecting the cooking zone** 0 Unlimited: The hotplate that was last set remains selected.* 1 Limited: The cooking zone only remains selected for a few seconds.

c 12	**Check the cookware and the cooking results** 0 Not suitable 1 Not perfect 2 Suitable
c23	**Automatic management with power limitation** 0 Deactivated: Shows the power limitation according to the power management function.* 1 Activated: Does not show the power limitation of the power management function.
c0	**Restore to standard settings** 0 Individual settings.* 1 Restore factory settings.

*Factory setting

To access the basic settings:

The hob must be off.

1. Switch on the hob.
2. Within ten seconds, touch and hold the ◷ symbol for approximately four seconds.
   The first four displays provide product information. Touch the settings area to view the individual displays.

Product information	Display screen
After-sales service index (ASSI)	01
Production number	Fd
Production number 1	95.
Production number 2	05

3. Touching the ◷ symbol again takes you to the basic settings.
   c and 1 flash alternately on the displays and 0 appears as a presetting.

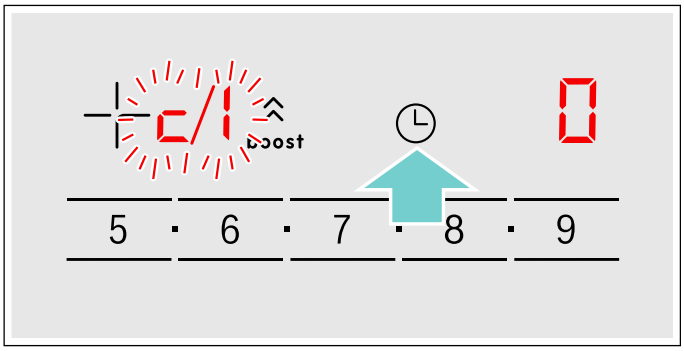

4. Touch the ◷ symbol repeatedly until the required function is displayed.
5. Then select the required setting from the settings area.

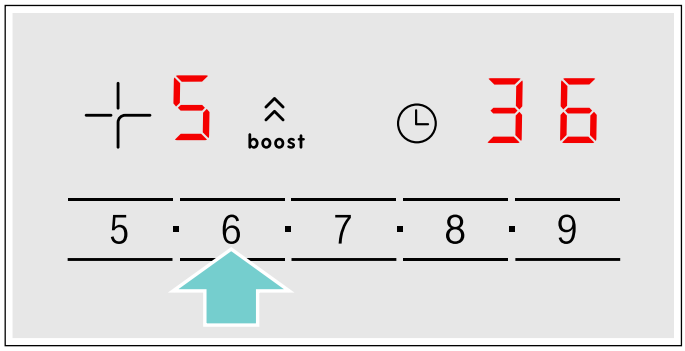

6. Touch the ◷ symbol for at least four seconds.

The settings have been saved.

Leaving the basic settings

Turn off the hob with the main switch.

Energy consumption indicator

This function indicates the total amount of energy consumed by this hob the last time it was used for cooking.

Once switched off, the energy consumption in kWh is displayed for 10 seconds.

The picture shows an example with an energy consumption of 1.08 kWh.

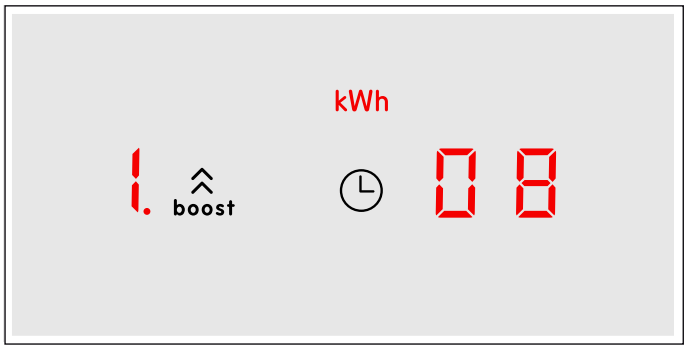

You can find out how to switch this function on in the section on ⟶ *"Basic settings"*

Cookware check

This function can be used to check the speed and quality of the cooking process depending on the cookware.

The result is a reference value and depends on the properties of the cookware and the hotplate being used.

1. Place a cold saucepan containing approx. 200 ml of water in the centre of the hotplate the diameter of which matches the base of the pan most closely.
2. Go to the basic settings and select the c 12 setting.
3. Touch the control panel. – will flash on the hotplate display.
   The function has now been enabled.

After 20 seconds, the quality and speed of the cooking process will appear in the hotplate display.

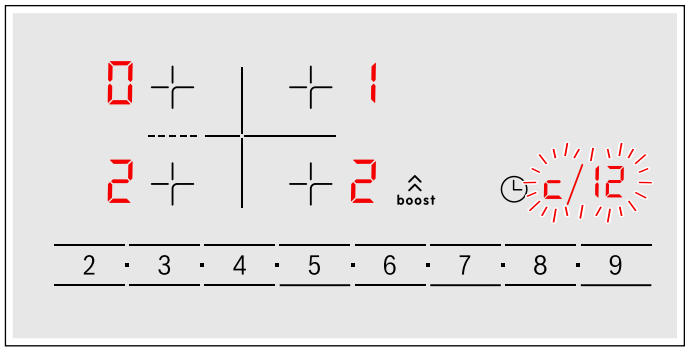

Check the result using the following table:

Result	
0	The cookware is not suitable for the hotplate and will therefore not heat up.*
1	The cookware is taking longer to heat up than expected and the cooking process is not going as well as it should.*
2	The cookware is heating up correctly and the cooking process is going well.

* If there is a smaller hotplate available, test the cookware again on the smaller hotplate.

To reactivate this function, touch the settings range.

Notes

- If the diameter of the hotplate used is much smaller than the diameter of the cookware, only the middle of the cookware can be expected to heat up. This may result in the cooking results not being as good as expected or being less than satisfactory.
- You can find information on this function in the section on ⟶ *"Basic settings"*.
- You can find information on the type, size and positioning of the cookware in the section on ⟶ *"Induction cooking"*.

Power manager

You can use the power manager to set the total power of the hob.

The hob is preset at the factory. You can use the power manager to change the value in accordance with the requirements for the relevant electrical installation.

In order not to exceed this set value, the hob automatically distributes the power available between the cooking zones that are switched on.

As long as the power manager function is activated, the output of a cooking zone may temporarily fall below the nominal value. If a cooking zone is switched on and the power limit is reached, _ appears in the heat setting display for a short time. The appliance automatically regulates and selects the highest possible power level.

For more information about how the total power of the hob is changed, see section ⟶ *"Basic settings"*

Operating the appliance

You have already learnt about the controls and how they work. Now we will explain how to apply settings on your appliance.

Switching the appliance on and off

Use the function selector to switch the appliance on or off. Turning the function selector to any position other than the "Off" position switches on the appliance. To switch off the appliance, always turn the function selector to the "Off" position.

Setting the heating function and temperature

The function selector and temperature selector make it very easy to apply the settings you require to your appliance. To find out which heating function is best for which type of food, please refer to the beginning of the instruction manual. ⟶ *"Getting to know your appliance" on page 13*

Example in the picture: Top/bottom heating ⊟ at 190 °C.

1. Use the function selector to set the heating function.

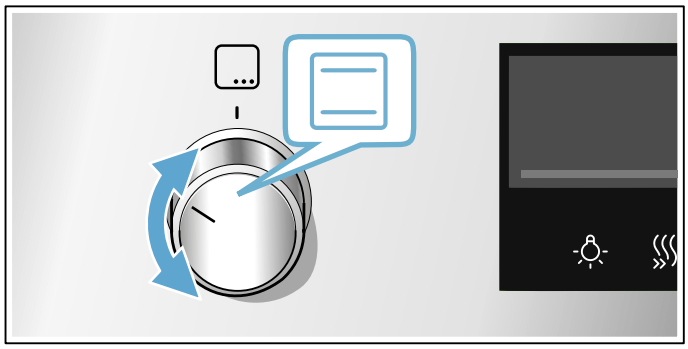

2. Use the temperature selector to set the temperature or grill setting.

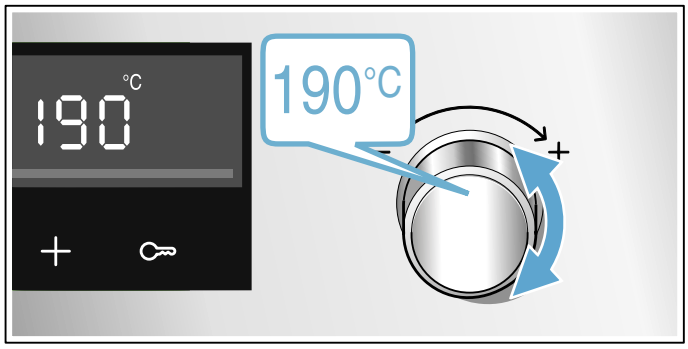

The appliance will start heating after a few seconds.

Once your food is cooked, turn the function selector to the "Off" position to switch the appliance off.

Note: You can set both a cooking time and an end time on the appliance. ⟶ *"Time-setting options" on page 23*

Changing

The heating function and temperature can be changed at any time using the relevant selector.

If you change the heating function, the temperature will be changed to the corresponding default value.

Rapid heating

With Rapid heating, you can shorten the heat-up time.

Suitable heating functions include:
- 3D hot air
- Top/bottom heating

Only use Rapid heating when a temperature of over 100 °C has been selected.

To achieve an even cooking result, do not place your food into the cooking compartment until Rapid heating is complete.

1. Set the heating function and temperature.
2. Touch the button.
   The » symbol will appear on the display.

The oven will start heating after a few seconds.

Once Rapid heating is complete, an audible signal will sound and the » symbol will go out.Place your food in the cooking compartment.

Time-setting options

Your appliance has different time-setting options.

Time-setting option		Use
	Cooking time	Once the set cooking time has elapsed, the appliance will automatically stop heating.
	End time	Enter a cooking time and the required end time. The appliance will start up automatically so that it finishes cooking at the required time.
	Timer	The timer functions like an egg timer. It runs independently of the appliance when it is heating and of other time-setting options and does not affect the appliance.
	Time	When no other function is running in the foreground, the appliance will show you the time of day on the display.

Before you can call up the cooking time using the button, you will need to set a heating function.Once you have set a cooking time, the end time can be called up. The timer can be set at any time.

An audible signal will sound once the cooking time or timer duration has elapsed. You can cancel the audible signal early by touching the button.

Note: You can change how long the audible signal sounds for in the basic settings. → *"Basic settings" on page 26*

Setting the cooking time

You can set the cooking time for your food on the appliance. This prevents the food from accidentally being cooked for too long, and means that you do not have to stop what you are doing to switch off the oven.

The maximum time that can be set is 23 hours and 59 minutes. The cooking time can be set in 1-minute increments up to one hour, and then in 5-minute increments.

The cooking time will start at a different default value depending on which button you touch first:
10 minutes if you touch the **–** button and 30 minutes if you touch the **+** button.

Example in the picture: Cooking time of 45 minutes.
1. Set the type of heating and temperature or setting.
2. Touch the button twice.
   The cooking time will be highlighted on the display.

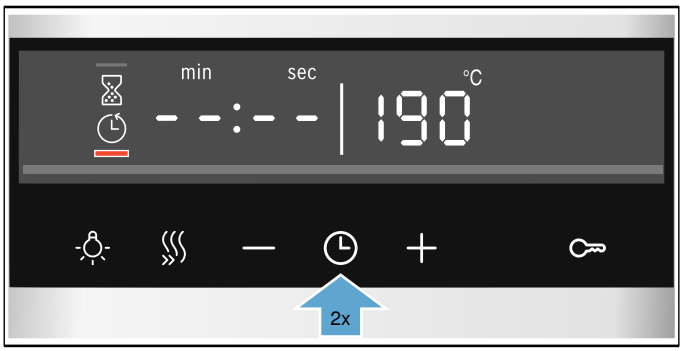

3. Use the – or + button to set the cooking time.

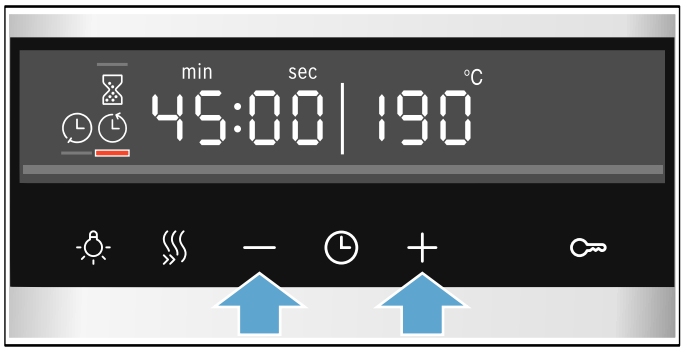

The appliance will start heating after a few seconds. The remaining time will count down on the display.

The cooking time has elapsed

An audible signal will sound. The appliance will stop heating. The cooking time will be zero on the display.

Once the signal stops, you can touch the + button to set a new cooking time.

Once your food is cooked, turn the function selector to the "Off" position to switch the appliance off.

Changing and cancelling

You can use the – or + button to change the cooking time at any time.After a few seconds, the change will be applied.

To cancel, use the – button to reset the cooking time all the way to zero. The appliance will continue heating without a cooking time.

Checking time-setting options

If time-setting options have been set, the corresponding symbols are lit up on the display. The symbol for which the time is currently being displayed will be indicated.

To check the values for the different time-setting options, touch the ⏲ button repeatedly until the required symbol is indicated.

Setting the end time

You can delay the time at which cooking is due to finish. You can, for example, put your food in the cooking compartment in the morning and set the cooking time so that it is ready at lunch time.

Notes

- Make sure that food is not left in the cooking compartment for too long as it may spoil.
- Do not adjust the end time once the appliance is already in operation. Otherwise the cooking result may no longer be satisfactory.

The end of the cooking time can be delayed by up to 23 hours and 59 minutes.

Example in the picture: The time is 10.30 a.m., a cooking time of 45 minutes has been set and you want the food to be ready at 12.30 p.m.

1. Set the type of heating and temperature or setting.
2. Touch the ⏲ button twice and use the – or + button to set the cooking time.
3. Touch the ⏲ button again.
   The end time ⏲ will be highlighted on the display.

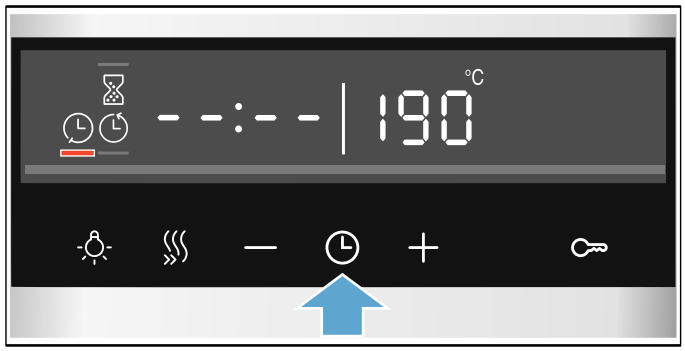

4. Use the + or – button to delay the end time.

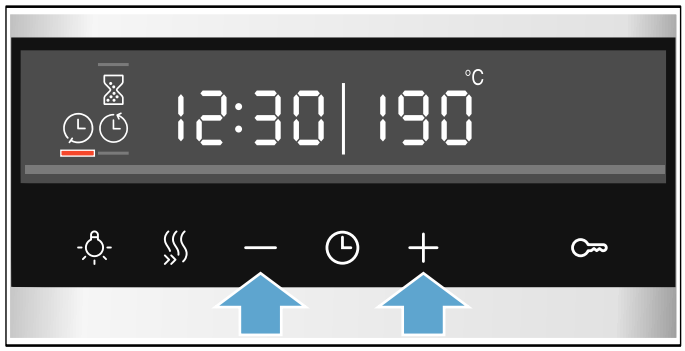

The appliance will apply the settings after a few seconds. The end time will be shown on the display. Once the appliance starts, the time will begin counting down.

The cooking time has elapsed

An audible signal will sound. The appliance will stop heating. The cooking time will be zero on the display.

Once the signal stops, you can touch the + button to set a new cooking time.

Once your food is cooked, turn the function selector to the "Off" position to switch the appliance off.

Changing and cancelling

You can use the – or + button to change the end time. After a few seconds, the change will be applied. The end time cannot be changed once the cooking time has already started to count down. Otherwise the cooking result would no longer be satisfactory.

To cancel, use the – button to set the end time all the way back to the current time plus the cooking time. The appliance will start to heat and the cooking time will start to count down.

Checking time-setting options

If time-setting options have been set, the corresponding symbols are lit up on the display. The symbol for which the time is currently being displayed will be indicated.

To check the values for the different time-setting options, touch the ⏲ button repeatedly until the required symbol is indicated.

Setting the timer

The timer runs alongside other settings. You can set it at any time, even if the appliance has been switched off. It has its own audible signal so that you can tell whether it is the timer or a cooking time that has elapsed.

The maximum time that can be set is 23 hours and 59 minutes. Up to 10 minutes, the timer duration can be set in 30-second increments.Above 10 minutes, the time increments become longer the higher the value.

The timer duration will start at a different default value, depending on which button you touch first:
5 minutes if you touch the **–** button and 10 minutes if you touch the **+** button.

1. Touch the ⏲ button until the timer symbol ⌛ is underlined.
2. Use the **–** or **+** button to set the timer duration.

After a few seconds, the timer duration will start to count down.

Tip: If the set timer duration is the duration for which you wish to cook your food, use the cooking time. The appliance will then switch off automatically when it has finished cooking.

The timer duration has elapsed

An audible signal will sound. The timer duration will be zero on the display.

Touch any button to switch off the timer.

Changing and cancelling

You can use the **–** or **+** button to change the timer duration at any time. After a few seconds, the change will be applied.

To cancel, use the **–** button to reset the timer duration all the way to zero. The timer is now switched off.

Checking time-setting options

If time-setting options have been set, the corresponding symbols are lit up on the display. The symbol for which the time is currently being displayed will be indicated.

To check the values for the different time-setting options, touch the ⏲ button repeatedly until the required symbol is indicated.

Setting the time

Once the appliance has been connected to the mains or following a power failure, the clock will flash on the display. Set the time.

The function selector must be set to the "Off" position.

1. Use the **–** or **+** button to set the time.
   The time will stop flashing.
2. Confirm by pressing the ⏲ button.

The appliance will apply the time you have set.

Note: You can go to the basic settings to specify whether or not the time should be shown on the display.
→ *"Basic settings" on page 26*

Changing the time

You can change the time again when you need to, e.g. from summer to winter time.

To do this, when the appliance is switched off, touch the ⏲ button until the symbol for the time is underlined, and use the **–** or **+** button to change the time.

Childproof lock

Your appliance is equipped with a childproof lock so that children cannot switch it on accidentally or change any settings.

Notes

- You can go to the basic settings to specify whether you want the option to set the childproof lock.
  → *"Basic settings" on page 26*
- If a hob is connected, it will not be affected by the childproof lock on the oven.

Activating and deactivating

To activate the childproof lock, the function selector must be set to the "Off" position.

Press and hold the button for approx. 4 seconds.

The symbol for this function will appear on the display. The childproof lock is now activated.

Note: If a timer duration has been set, this will continue to count down. While the childproof lock is active, the timer duration cannot be changed.

To deactivate the childproof lock, press and hold the button again for approx. 4 seconds until the symbol goes out on the display.

Basic settings

There are various settings available to you in order to help use your appliance effectively and simply. You can change these settings as required.

List of basic settings

Depending on the features of your appliance, not all basic settings will be available.

Basic setting		Options
c01	Audible signal duration upon completion of a cooking time or timer duration	1 = approx. 10 seconds 2 = approx. 30 seconds* 3 = approx. 2 minutes
c02	Amount of time until a setting is applied	1 = approx. 3 seconds* 2 = approx. 6 seconds 3 = approx. 10 seconds
c03	Button tone that sounds when a button is touched	0 = off 1 = on*
c04	Brightness of the display illumination	1 = dark 2 = medium* 3 = bright
c05	Display time of day	0 = hide the time 1 = display the time*
c06	Enable childproof lock activation?	0 = no 1 = yes* 2 = yes, with locked door**
c07	Interior lighting on when appliance in operation?	0 = no 1 = yes*
c08	Cooling fan run-on time	1 = short 2 = medium* 3 = long 4 = extra long
c09	Telescopic rails retrofitted?**	0 = no* (for rails and single pull-out system) 1 = yes (for double and triple pull-out systems)
c 10	Sabbath mode available?	0 = no* 1 = yes
c 12	Reset all values to factory settings?	0 = no* 1 = yes

* Factory setting (factory settings may vary depending on the appliance model)

** Not available for all appliance types.

Changing the basic settings

The function selector must be set to the "Off" position.

1. Press and hold the ⏲ button for approximately 4 seconds.
   The first basic setting will appear on the display, e.g. c01 1.
2. Turn the temperature selector to change the setting as required.
3. Use the + button to navigate to the next basic setting.
4. Using the − or + button, continue going through all the basic settings as described above, changing the settings if necessary using the temperature selector.
5. When you have finished, press and hold the ⏲ button again for approximately 4 seconds to confirm the settings.

All basic settings have now been applied.

You can change the basic settings again at any time.

Note: Your changes to the basic settings will be retained even after a power failure.

Sabbath mode

Sabbath mode lets you set a cooking time of over 70 hours. This enables you to keep dishes in the cooking compartment warm without having to switch the appliance on or off.

Starting Sabbath mode

Before you can use Sabbath mode, you will need to activate it in the basic settings. → *"Basic settings" on page 26*

The appliance heats up with top/bottom heating. You can set a temperature between 85 °C and 140 °C. The cooking time can be adjusted to the nearest half hour between 24 and 72 hours.

1. Set the function selector to the programme. SAbb appears on the display.
2. Use the temperature selector to set the temperature.
3. Touch the ⏲ button twice.
   The cooking time will be highlighted on the display.
4. Use the + or − button to set the cooking time.
   Note: The end time cannot be delayed.

The appliance will start heating after a few seconds. The remaining time will count down on the display.

When the cooking time for Sabbath mode has ended, an audible signal will sound. The appliance will stop heating. The time on the display will be zero.

Switch the appliance off by turning the function selector to the "Off" position.

Changing and cancelling

The settings cannot be changed once the appliance has started.

If you would like to cancel Sabbath mode, switch the appliance off by turning the function selector to the "Off" position.

Cleaning

With good care and cleaning, your appliance will retain its appearance and remain fully functioning for a long time to come. We will explain here how you should correctly care for and clean your appliance.

Cleaning agents

Damage to the various different surfaces caused by using the wrong cleaning agent can be avoided by observing the following instructions.

When cleaning the hob do not use

- undiluted washing-up liquid or dishwasher detergent,
- scouring pads,
- abrasive cleaning agents such as oven cleaner or stain remover,
- high-pressure cleaners or steam jets.
- Do not clean individual parts in the dishwasher.

When cleaning the oven do not use

- sharp or abrasive cleaning agents,
- cleaning agent with a high alcohol content,
- scouring pads,
- high-pressure cleaners or steam jets.
- Do not clean individual parts in the dishwasher.

Wash new sponges thoroughly before first use.

⚠ Warning – Risk of burns!
The appliance becomes very hot. Never touch the interior surfaces of the cooking compartment or the heating elements. Always allow the appliance to cool down. Keep children at a safe distance.

Area	Cleaning products
Stainless steel surfaces* (Depending on the appliance model)	Hot soapy water: Clean with a dishcloth and dry with a soft cloth. Always wipe stainless-steel surfaces parallel to the natural grain. Otherwise, you may scratch the surface. Remove patches and splashes of limescale, grease, starch and albumin (e.g. egg white) immediately. Corrosion can form under such flecks. Special care products suitable for hot stainless steel surfaces are available from our after-sales service and from specialist retailers. Apply a thin layer of care product with a soft cloth.
Enamel, painted, plastic and screen-printed surfaces* (Depending on the appliance model)	Hot soapy water: Clean with a dish cloth and dry with a soft cloth. Do not use glass cleaner or glass scrapers for cleaning.
Control panel	Hot soapy water: Clean with a dishcloth and dry with a soft cloth. Do not use glass cleaner or glass scrapers for cleaning.

* Optional (available for some appliances. Depending on the appliance model.)

Area	Cleaning products
Upper glass cover* (Depending on the appliance model)	Glass cleaner: Clean with a soft cloth. You can remove the upper glass cover for cleaning. To find out how to do this, refer to the section *Upper glass cover*.
Rotary knobs Do not remove!	Hot soapy water: Clean with a dish cloth and dry with a soft cloth.
Hob surround	Hot soapy water: Do not clean with a glass scraper, lemon juice or vinegar.
Gas hob and pan supports* (Depending on the appliance model)	Hot soapy water. Use very little water. Water must not be allowed to enter the inside of the appliance through the base of the burners. Clean off boiled-over liquids and spilt food immediately. You can remove the pan supports.
	Cast iron pan supports*: Do not clean in the dishwasher.
Gas burners* (Depending on the appliance model)	Remove the burner head and cap and clean with hot soapy water. Do not clean in the dishwasher. The gas outlet openings must remain free from obstruction. Ignition plugs: Small, soft brush. The gas burners only work properly when the ignition plugs are dry. Dry all parts thoroughly. Ensure they are refitted correctly. The burner caps are coated in black enamel. The colour may change over time. This does not affect their function.
Electric hotplate* (Depending on the appliance model)	Abrasive materials or sponges: Briefly heat up the hotplate afterwards, so that it dries. Hotplates can rust over time if they remain wet. Apply care product to finish. Clean off boiled-over liquids and spilt food immediately.
Hotplate ring* (Depending on the appliance model)	Remove yellow to blue iridescent discoloura-tion from the hotplate ring with a steel care product. Do not use any abrasive materials that may scratch surfaces.
Ceramic hob* (Depending on the appliance model)	Care: Protective/care products for ceramics Cleaning: Cleaning agents suitable for glass ceramic. Follow the cleaning instructions on the packaging.
	⚠ Glass scraper for heavy soiling: Remove the protective cover and clean using the blade only. Caution, the blade is very sharp. Risk of injury. Cover the blade again after cleaning. Replace damaged blades immediately.

* Optional (available for some appliances. Depending on the appliance model.)

Area	Cleaning products
Glass hob* (Depending on the appliance model)	Care: Protective/care products for glass Cleaning: Cleaning agents for glass. Follow the cleaning instructions on the packaging.
	⚠Glass scraper for heavy soiling: Remove the protective cover and clean using the blade only. Caution, the blade is very sharp. Risk of injury. Cover the blade again after cleaning. Replace damaged blades immediately.
Glass panel	Glass cleaner: Clean with a soft cloth. Do not use glass scrapers. You can remove the door to make it easier to clean. To find out how to do this, please refer to the section *Removing and refitting the oven door*.
Door childproof lock* (Depending on the appliance model)	Hot soapy water: Clean with a dishcloth. If a childproof lock has been fitted on the oven door, it must be removed before cleaning. If very dirty, the childproof lock will not work properly.
Seal Do not remove!	Hot soapy water: Clean with a dishcloth. Do not rub.
Cooking compartment	Hot soapy water or a vinegar solution: Clean with a dishcloth and dry with a soft cloth. Soak baked-on food residues with a damp cloth and a detergent solution. Use stainless steel wire wool or oven cleaner to remove stubborn dirt. ⚠Never use oven cleaner on self-cleaning surfaces. Leave the cooking compartment open to dry after cleaning. If your oven has a self-cleaning function, it is best to use this. ⟶ *"Cleaning function" on page 37* **Note:** White deposits may form as a result of food residue. These are not a problem and do not influence how the appliance functions. If required, you can remove these deposits using lemon juice.
Glass cover for the oven light	Hot soapy water: Clean with a dishcloth.

* Optional (available for some appliances. Depending on the appliance model.)

Area	Cleaning products
Rack	Hot soapy water: Clean with a dishcloth or a brush. Remove the rail for cleaning. To do this, refer to the section *Removing and refitting the rail*!
	Telescopic rails* (Depending on the appliance model) Hot soapy water: Clean with a dishcloth or a brush. Do not remove the lubricant while the pull-out rails are pulled out – it is best to clean them when they are pushed in. Do not soak, clean in the dishwasher, or clean in the oven as part of the self-cleaning programme. This may damage the shelves and they may no longer work properly as a result.
Accessories	Hot soapy water: Soak and then clean with a dish cloth or a brush.
	Aluminium baking tray*: (Depending on the appliance model) Dry with a soft cloth. Do not clean in the dishwasher. Never use oven cleaner. To prevent scratches, never touch the metal surfaces with a knife or a similar sharp object. Harsh cleaning products, scratchy sponges and rough cleaning cloths are not suitable. Otherwise, you may scratch the surface.
	Rotary spit* (Depending on the appliance model) Hot soapy water: Clean with a dishcloth or a brush. Do not clean in the dishwasher.
	Meat thermometer* (Depending on the appliance model) Hot soapy water: Clean with a dishcloth or a brush. Do not clean in the dishwasher.
Plinth drawer* (Depending on the appliance model)	Hot soapy water: Clean with a dishcloth.

* Optional (available for some appliances. Depending on the appliance model.)

Notes

- Slight differences in colour on the front of the appliance are caused by the use of different materials, such as glass, plastic and metal.
- Shadows on the door panels, which look like streaks, are caused by reflections made by the interior lighting.
- Enamel is baked on at very high temperatures.This can cause some slight colour variation. This is normal and does not affect operation.
  The edges of thin trays cannot be completely enamelled. As a result, these edges can be rough. This does not impair the anti-corrosion protection.

Keeping the appliance clean

Always keep the appliance clean and remove dirt immediately so that stubborn deposits of dirt do not build up.

⚠ Warning – Risk of fire!
Loose food remnants, fat and meat juices may catch fire. Before using the appliance, remove the worst of the food remnants from the cooking compartment, heating elements and accessories.

Tips

- Clean the cooking compartment after each use. This will ensure that dirt cannot be baked on.
- Always remove flecks of limescale, grease, starch and albumin (e.g. egg white) immediately.
- Use the universal pan for baking very moist cakes.
- Use suitable ovenware for roasting, e.g. a roasting dish.

Cleaning function

Use the "Pyrolytic self-cleaning" function to clean the cooking compartment.

You can choose from three cleaning cycles.

Cycle	Cleaning performance	Length of cycle
1	Gentle	Approx. 1 hour and 15 minutes
2	Medium	Approx. 1 hour and 30 minutes
3	Intensive	Approx. 2 hours

The dirtier the cooking compartment and the longer the dirt has been there, the more powerful the cleaning cycle should be. It is sufficient to clean the cooking compartment every two to three months. You can clean it more frequently if necessary. Cleaning requires approx. 2.5-4.8 kilowatt hours.

Notes

- For safety reasons, the appliance door locks automatically once a certain temperature is reached. You will not be able to open it again until the lock symbol 🔒 on the display has gone out.
- The interior lighting will not come on while the appliance is being cleaned.

⚠ Warning
Risk of burns!

- The cooking compartment becomes extremely hot during the cleaning function. Never open the appliance door. Allow the appliance to cool down. Keep children away from the appliance.
- ⚠ The appliance becomes very hot on the outside during the cleaning function. Never touch the appliance door. Allow the appliance to cool down. Keep children at a safe distance.

⚠ Warning
Risk of harm to health!
The cleaning function heats up the cooking compartment to a very high temperature so that food remnants left over from roasting, grilling and baking will burn off.This process releases vapours, which can irritate the mucous membranes. While the cleaning function is running, keep the kitchen well ventilated. Do not remain in the room for long periods. Keep children and pets away. Follow the instructions even when using the Delayed start function with a delayed end time.

Before running the cleaning function

The cooking compartment must be empty. Remove any accessories, cookware or shelf rails from the cooking compartment. Please see the relevant section for information on how to remove the rails. → *"Rails" on page 39*

Clean the appliance door and along the edges of the cooking compartment in the area around the seal. Do not scrub or remove the seal.

Clean the inner door panel using hot soapy water and a dish cloth. Dry with a soft cloth. If the cooking compartment is heavily soiled, use oven cleaner.

⚠ Warning
Risk of fire!

- Loose food remnants, fat and meat juices may catch fire when the cleaning function is in progress. Before you start the cleaning function, always remove the worst of the food residues and remnants from the cooking compartment.Do not use the cleaning function for cleaning accessories.
- The appliance will become very hot on the outside during the cleaning function. Never hang combustible objects, e.g. tea towels, on the door handle. Do not place anything against the front of the appliance. Keep children away from the appliance.
- If the door seal is damaged, a large amount of heat will be generated around the door. Do not scrub or remove the seal. Never operate the appliance if the seal is damaged or missing.

Setting the cleaning function

Make sure you follow all the preparation instructions before setting the cleaning function.

The length of time each cleaning cycle runs for has been preset and cannot be changed.

1. Use the function selector to set Pyrolytic self-clean ⊞.
2. Use the temperature selector to set the cleaning cycle.
   The length of each cycle will appear on the display.

The cleaning function will start in a few seconds. The remaining time will count down on the display.

Ventilate the kitchen while the cleaning function is running.

The appliance door will lock shortly after the programme starts running. The 🔒 symbol will appear on the display.

An audible signal will sound when the cleaning function has finished. The time on the display will be zero. Switch the appliance off by turning the function selector to the "Off" position.

You will not be able to open the appliance door again until the cooking compartment has cooled down sufficiently and the lock symbol 🔒 on the display has gone out.

Delaying the end time

You can delay the end time if required. Before starting, touch the ⏲ button until the "End" symbol is highlighted on the display. Use the **+** button to delay the end time.

The appliance will switch to standby after it is started.

Changing and cancelling

The power of the cleaning cycle cannot be changed once it has started.

The end time can be changed while the appliance is on standby.

If you would like to cancel the cleaning function, switch the appliance off by turning the function selector to the "Off" position.

The appliance door will remain locked until the cooking compartment has cooled down sufficiently and the lock symbol on the display has gone out.

After running the cleaning function

Allow the cooking compartment to cool down. Use a damp cloth to wipe off the ash that has been left behind in the cooking compartment and around the appliance door.

Hook the rails back in.

Note: Very bad soiling may cause white deposits to remain on the enamel surfaces. This is residue from the food and is harmless. It does not affect performance. You can remove these residues using lemon juice if required.

Rails

With good care and cleaning, your appliance will retain its appearance and remain fully functional for a long time to come. This will tell you how to remove the shelves and clean them.

Detaching and refitting the rails

The rails can be removed for cleaning. The oven must have cooled down.

Detaching the rails

1. Lift up the front of the rail
2. and unhook it (figure A).
3. Then pull the whole rail forward
4. and remove it (Fig. B).

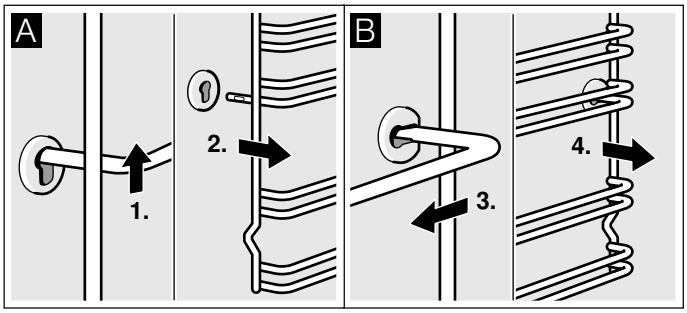

Clean the rails with cleaning agent and a sponge. For stubborn deposits of dirt, use a brush.

Refitting the rails

1. First insert the rail into the rear socket, press it to the back slightly (figure A),
2. and then hook it into the front socket (figure B).

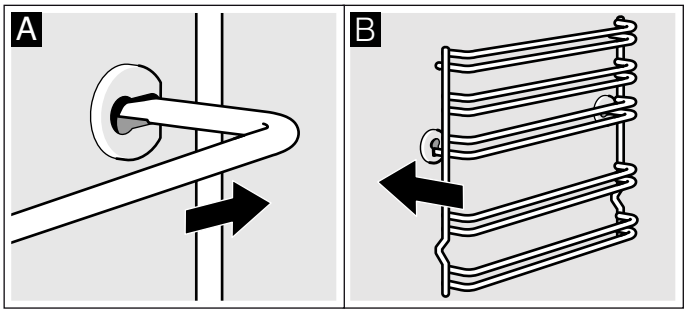

The rails fit both the left and right sides. Ensure that, as shown in figure B, levels 1 and 2 are below and levels 3, 4 and 5 are above.

Appliance door

With good care and cleaning, your appliance will retain its appearance and remain fully functional for a long time to come. This will tell you how to remove the appliance door and clean it.

Detaching and attaching the oven door

For cleaning purposes and to remove the door panels, you can detach the oven door.

The oven door hinges each have a locking lever. When the locking levers are closed (figure A), the oven door is secured in place. It cannot be detached. When the locking levers are open in order to detach the oven door (Fig. B), the hinges are locked. They cannot snap shut.

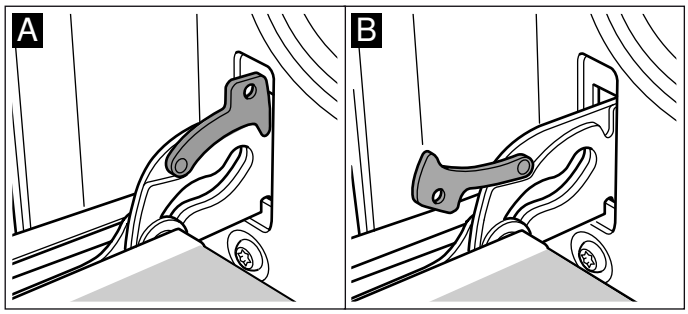

⚠ Warning – Risk of injury!
Whenever the hinges are not locked, they snap shut with great force. Ensure that the locking levers are always fully closed or, when detaching the oven door, fully open.

Detaching the door

1. Open the oven door fully.
2. Fold up the two locking levers on the left and right (figure A).
3. Close the oven door as far as the limit stop. With both hands, grip the door on the left and right-hand sides. Close the door a little further and pull it out (figure B).

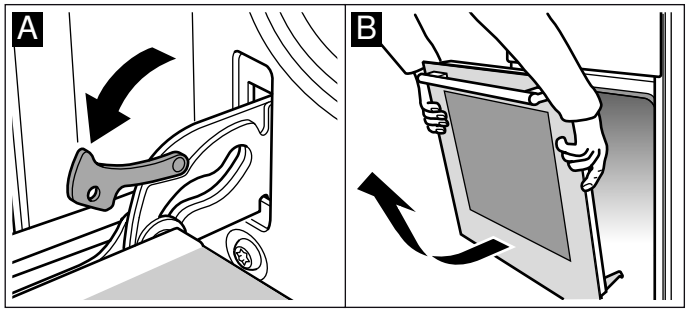

Attaching the door

Reattach the oven door in the reverse sequence to removal.

1. When attaching the oven door, ensure that both hinges are inserted straight into the opening (figure A).
2. The notch on the hinge must engage on both sides (figure B).

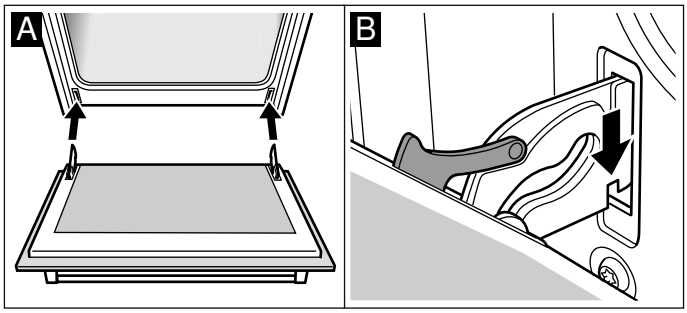

3. Fold back both locking levers (figure C). Close the oven door.

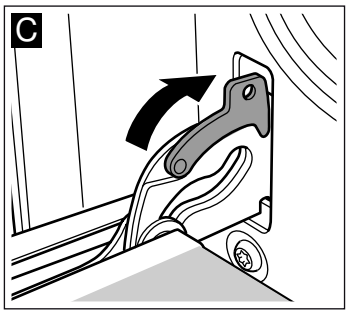

Warning – Risk of injury!
If the oven door falls out accidentally or a hinge snaps shut, do not reach into the hinge. Call the after-sales service.

Fitting and removing the door panels

To make it easier to clean the glass panels, remove them from the oven door.

When removing the inner panels, pay attention to the order in which the panels are removed. In order to reassemble the panels in the correct sequence, follow the number which appears on each panel. First insert the panel no. 1.

Removing

1. Unhook the oven door and position it on a cloth with its handle pointing downwards.
2. Unscrew the cover at the top of the oven. Undo the screws on the left and right (fig. A).
3. Lift and pull out the top panel, and remove the two small seals (fig. B).

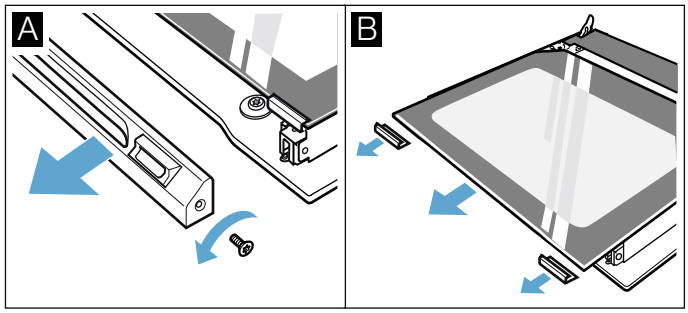

4. Remove the retaining clips on the right and left. Lift the panel and remove the claws from the panel (fig. C).
5. Remove the seal from below the panel (fig. D). Pull the seal and remove it upwards. Remove the panel.

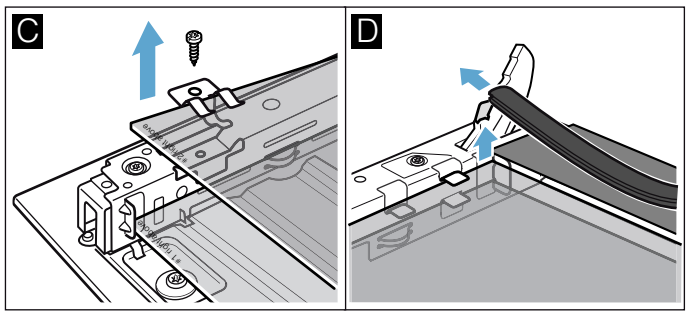

6. Pull the lower panel diagonally upwards and out.
7. DO NOT REMOVE the screws that are located on the right and left of the sheet metal part (fig. E).

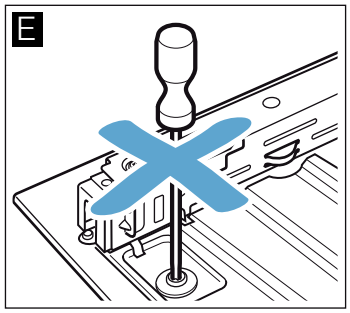

Clean the glass panels with glass cleaner and a soft cloth.

Warning – Risk of injury!
Scratched glass in the appliance door may develop into a crack. Do not use a glass scraper, sharp or abrasive cleaning aids or detergents.

Installation

When fitting the panels , make sure that the lettering "right above" is upside down at the bottom left on both panels.

1. Insert the lower panel with no. 1 downwards at an angle (fig. A).
2. Insert the middle panel with no. 2 inwards (fig. B).

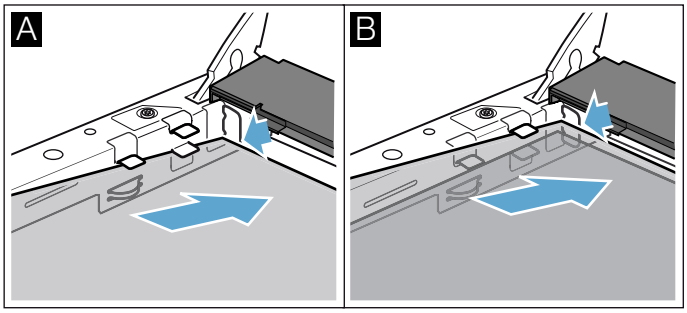

3. Fit the retaining clips onto the right- and left-hand side of the panel, aligning them so that the springs are over the screw holes. Screw the retaining clips in place (fig. C).
4. Insert the seal below the panel (fig. D).

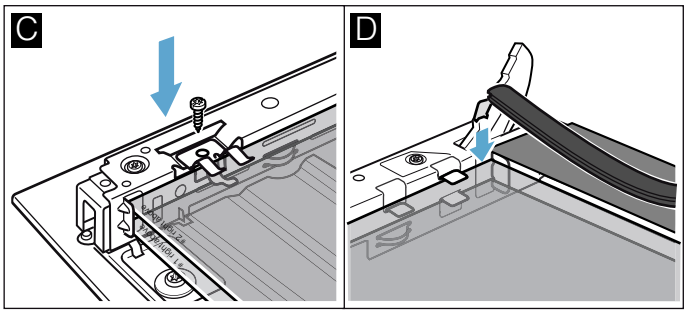

5. Hold the top panel in both brackets and insert it at an angle towards the back. Ensure that the seal does not slip backwards (fig. E).
6. Fit the two small seals on the left and right of the panel again (fig. F).

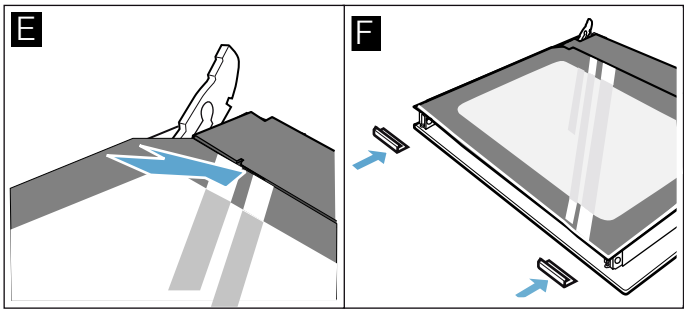

7. Put the cover back in place and screw it on.
8. Hang the oven door.

Only use the oven once the glass panels have been correctly fitted.

Additional door safety

When preparing meals with long cooking times, the oven door can reach very high temperatures.

Supervise small children and keep them away from the oven when the oven is in operation.

Additional safety devices have been fitted to prevent contact with the oven door. Always attach these safety devices when children could come near the oven.

You can purchase this optional accessory (11023590) from the after-sales service.

Frequently Asked Questions (FAQ)

Using the appliance

Why can't I switch on the hob and why is the childproof lock symbol lit?

The childproof lock is activated.
You can find information on this function in the section on ⟶ *"Childproof lock"*

Why are the displays flashing and why can I hear an audible signal?

Remove any liquid or food remains from the control panel. Remove any objects from the control panel.
You can find instructions on how to deactivate the audible signal in the section on ⟶ *"Basic settings"*

Noises

Why I can hear noises while I'm cooking?

Noises may be generated while using the hob depending on the base material of the cookware. These noises are a normal part of induction technology. They do not indicate a defect.

Possible noises:

A low humming noise like the one a transformer makes:

Occurs when cooking at a high heat setting. The noise disappears or becomes quieter when the heat setting is reduced.

Low whistling noise:

Occurs when the cookware is empty. This noise disappears when water or food is added to the cookware.

Crackling:

Occurs when using cookware made from different layers of material or when using cookware of different sizes and different materials at the same time. The loudness of the noise can vary depending on the quantity of food being cooked or the cooking method.

High-pitched whistling noises:

Can occur when two hotplates are used at the highest heat setting at the same time. The whistling noises disappear or become quieter when the heat setting is reduced.

Fan noise:

The hob is equipped with a fan that switches on automatically at high temperatures. The fan may continue to run even after you have switched off the hob if the temperature detected is still too high.

Cookware

Which types of cookware can be used with an induction hob?

You can find information on which types of cookware can be used with an induction hob in the section on ⟶ *"Induction cooking"*

Why is the hotplate not heating up and why is the heat setting flashing?

The hotplate on which the cookware is standing is not switched on.
Check that you have switched on the correct hotplate.

The cookware is too small for the hotplate that is switched on or it is not suitable for induction cooking.
Check that the cookware is suitable for induction cooking and that it is placed on the hotplate that best corresponds to its size. You can find information on the type, size and positioning of the cookware in the sections on ⟶ *"Induction cooking"*, ⟶ *"CombiZone function"* and ⟶ *"Move function"*

Why is it taking so long for the cookware to heat up or why is it not heating up sufficiently despite being on a high heat setting?

The cookware is too small for the hotplate that is switched on or it is not suitable for induction cooking.
Check that the cookware is suitable for induction cooking and that it is placed on the hotplate that best corresponds to its size. You can find information on the type, size and positioning of the cookware in the sections on ⟶ *"Induction cooking"*, ⟶ *"CombiZone function"* and ⟶ *"Move function"*

Cleaning	
How do I clean the hob?	Using a special glass-ceramic cleaning agent produces the best results. We advise against using harsh or abrasive cleaning agents, dish-water detergent (concentrated) or scouring pads. You can find more information on cleaning and caring for your hob in the section on ⟶ *"Cleaning"*

Trouble shooting

If a fault occurs, there is often a simple explanation. Before calling the after-sales service, please refer to the fault table and attempt to correct the fault yourself.

Display	Possible cause	Solution
None	The power supply has been disconnected.	Use other electrical devices to check whether a short-circuit has occurred in the power supply.
	The device has not been connected in accordance with the circuit diagram.	Ensure that the device has been connected in accordance with the circuit diagram.
	Electronics fault.	If the fault cannot be eliminated, inform the technical after-sales service.
The displays flash	The control panel is damp or an object is covering it.	Dry the control panel or remove the object.
The – indicator flashes in the hotplate displays	A fault has occurred in the electronics.	To acknowledge the fault, cover the control panel with your hand.
F2	The electronics have overheated and have switched off the corresponding hotplate.	Wait until the electronics have cooled down sufficiently. Then touch any symbol on the hob.
F4	The electronics have overheated and have switched off all hotplates.	
F5 + heat setting and acoustic signal	There is a hot pan in the area of the control panel. There is a risk that the electronics will overheat.	Remove the pan. The fault display goes out shortly afterwards. You can continue to cook.
F5 and acoustic signal	There is a hot pan in the area of the control panel. To protect the electronics, the hotplate has been switched off.	Remove the pan. Wait for a few seconds. Touch any control. If the fault display goes out, you can continue to cook.
F 1/F6	The hotplate has overheated and switched itself off to protect the work surface.	Wait until the electronics have cooled down sufficiently and switch the hotplate on again.
F8	The hotplate was operating for an extended period without interruption.	The automatic safety switch-off function has been activated. See section
E9000 E90 10	The supply voltage is faulty; outside of the normal operating range.	Contact your electricity provider.
U400	The hob is not connected properly	Disconnect the hob from the power supply. Ensure that it has been connected in accordance with the circuit diagram.

Do not place hot pans on the control panel.

Notes

- If E appears on the display, press and hold the button for the relevant cooking zone in order to read the fault code.
- If the fault code is not listed in the table, disconnect the hob from the mains power supply and wait 30 seconds before reconnecting it. If this code is displayed again, contact the technical after-sales service and specify which fault code has appeared.
- If a fault occurs, the appliance will not switch to standby mode.

Rectifying faults yourself

You can often easily rectify technical faults with the appliance yourself.

If a dish does not turn out exactly as you wanted, you can find useful cooking tips and instructions at the end of this instruction manual. → *"Tested for you in our cooking studio" on page 49*

Fault	Possible cause	Notes/remedy
The appliance is not working.	Defective circuit breaker.	Check the circuit breaker in the fuse box.
	Power failure	Check whether the kitchen light or other kitchen appliances are working.
The time is flashing on the display.	Power failure.	Reset the time.
The settings on the appliance cannot be configured. A key symbol has lit up on the display or SAFE.	The childproof lock is activated.	Deactivate the childproof lock by pressing and holding the button with the key symbol for approx. 4 seconds.
The appliance door will not open. A key symbol has lit up on the display.	The appliance door is locked with the childproof lock.	Deactivate the childproof lock by pressing and holding the button with the key symbol for approx. 4 seconds. The lock can be switched off in the basic settings.
The appliance door will not open. A lock symbol 🔒 has lit up on the display.	The appliance door is locked by the cleaning function.	Wait until the cooking compartment has cooled down and the lock symbol 🔒 has gone out.
After an operating mode is switched on, h is flashing on the display.	The appliance has not cooled down sufficiently.	Switch off the appliance, allow it to cool down and switch on the operating mode again.
The appliance is not heating. The colon is flashing on the display. On some appliances, a d will also appear on the display.	Demo mode is activated.	Briefly disconnect the appliance from the mains (switch off the circuit breaker in the fuse box) and then deactivate demo mode within approx. 5 minutes by changing the basic setting c 13 or cb to 0. → *"Basic settings" on page 26*

⚠ Warning – Risk of injury!
Incorrect repairs are dangerous. Do not attempt to repair the appliance yourself. Repairs must only be carried out by one of our trained after-sales engineers. If the appliance is defective, call the after-sales service.

⚠ Warning – Risk of electric shock!
Incorrect repairs are dangerous. Repairs may only be carried out and damaged power cables replaced by one of our trained after-sales technicians. If the appliance is defective, unplug the appliance from the mains or switch off the circuit breaker in the fuse box. Contact the after-sales service.

Error messages on the display

If an error message with "E" appears on the display, e.g. E05-32, touch the ⏲ button. This will reset the error message. Reset the time, if necessary.

If the fault was a one-off, you can continue to use your appliance as normal. If the error message appears again, call our after-sales service and quote the exact error message and the E no. of your appliance.
→ *"Customer service" on page 45*

Maximum operating time

If you do not change the settings on your appliance for several hours, the appliance will stop heating automatically. This prevents unintentional continuous operation.

When the maximum operating time is reached depends on the various different settings that have been configured on the appliance.

Maximum operating time reached
F8 appears on the display.

Turn the function selector to the "Off" position. You can configure new settings if required.

Tip: To prevent the appliance from switching off when you do not want it to, e.g. with an extremely long cooking time, you should always set a cooking time. The appliance will heat up until the set cooking time has elapsed.

Replacing the bulb in the oven ceiling light

If the bulb in the oven light fails, it must be replaced. Heat-resistant, 25 watt, 230 V halogen bulbs are available from the after-sales service or specialist retailers. When handling the halogen bulb, use a dry cloth. This will increase the service life of the bulb. Only use these bulbs.

⚠ Warning – Risk of electric shock!
Switch off the circuit breaker in the fuse box.

1. Place a tea towel in the oven when it is cold to prevent damage.
2. Remove the glass cover. To do this, press the metal tabs to the side with your thumb (Fig. A).
3. Pull out the bulb (do not turn it) (Fig. B). Insert the new bulb, making sure that the pins are in the correct position. Push the bulb in firmly.

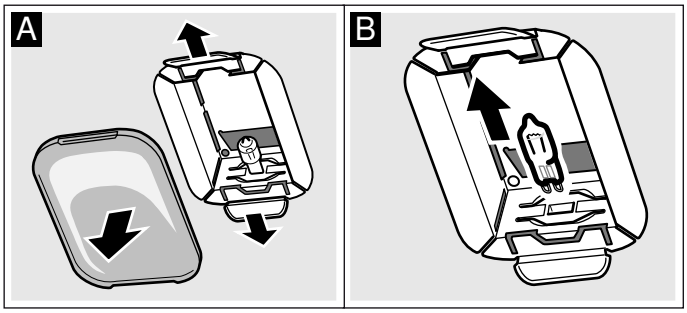

4. Refit the glass cover. When doing this, insert it on one side and press firmly on the other side. The glass cover will click into place.
5. Remove the tea towel and switch on the circuit breaker.

Customer service

Our after-sales service is there for you if your appliance needs to be repaired. We will always find an appropriate solution, also in order to avoid after-sales personnel having to make unnecessary visits.

E number and FD number

When calling us, please give the product number (E no.) and the production number (FD no.) so that we can provide you with the correct advice. The rating plate containing these numbers is found on the side of the oven door. To save time, you can make a note of the number of your appliance and the telephone number of the after-sales service in the space below, should it be required.

E no.		**FD no.**	

After-sales service ☏	

Please note that there will be a fee for a visit by a service technician in the event of a malfunction, even during the warranty period.

Please find the contact data of all countries in the enclosed customer service list.

To book an engineer visit and product advice

GB 0344 892 8979
Calls charged at local or mobile rate.

IE 01450 2655
0.03 € per minute at peak. Off peak 0.0088 € per minute.

Rely on the professionalism of the manufacturer. You can therefore be sure that the repair is carried out by trained service technicians who carry original spare parts for your appliances.

Programmes

You can prepare food very easily using the various programmes. Simply select a programme and the appliance will apply the optimal settings for you.

To achieve good results, the cooking compartment must not be too hot. Allow the cooking compartment to cool before starting the programme.

Cookware

Follow the instructions provided by the cookware manufacturer.

Suitable cookware:
Use cookware that is heat-resistant up to 300 °C.

Glass or glass ceramic cookware is best. The grill can heat through the glass lid and the roast will become nice and crispy on the outside.

Roasting dishes made from stainless steel are not ideal.Their shiny surface reflects a high proportion of the radiated heat.The food will brown less readily and the meat will be less well done. If you are using a stainless steel roasting dish, remove the lid once the programme has come to an end. Grill the meat at grill setting 3 for an additional 8 to 10 minutes.

The food will brown more quickly from below if you use a roasting dish made of enamelled steel, cast iron or die-cast aluminium.Add a little more liquid.

Tip: If the gravy is too light or too dark, add less or more liquid next time.

Unsuitable cookware:
Cookware made of bright, shiny aluminium, unglazed clay or plastic, and cookware with plastic handles, is not suitable.

Size of the cookware:
The roast should cover around two thirds of the cookware base.This will ensure that you get good meat juices.

The distance between the meat and the lid should be at least 3 cm. The meat may expand as it roasts.

Preparing food

Use frozen products straight from the freezer. For meat dishes, use fresh food, ideally at fridge temperature.

Tip: Very lean meat will remain more succulent if it is covered with rashers of bacon.

Weigh your food. You need the weight in order to set the programme. Always round up to the nearest weight.

Place the cookware onto the wire rack. Always place the ovenware into the cooking compartment without preheating it.

Programmes

When the roast is ready, it can be left to rest for an additional 10 minutes in the cooking compartment with the appliance switched off and the door closed. This allows for better distribution of the meat juices.

Note: The weight range is deliberately limited.For very large items of food, there is often no suitable cookware available, meaning that the cooking result would not be what was expected.

Programme		Food	Cookware	Weight range in kg	Add liquid	Shelf position	Set weight	Information
01	**Pizza**, thin-crust	Frozen, prebaked	Universal pan with grease-proof paper	0,28-0,4	No	3	Total weight	The cooking compartment must be cold to begin with. For a second pizza, follow the instructions on the packaging.
02	**Pizza**, deep-pan	Frozen, prebaked	Universal pan with grease-proof paper	0,28-0,6	No	3	Total weight	The cooking compartment must be cold to begin with. For a second pizza, follow the instructions on the packaging.
03	**Lasagne**	Frozen	Original packag-ing	0,3-1,2	No	3	Total weight	-
04	**Chips**	Frozen	Universal pan with grease-proof paper	0,2-0,75	No	3	Total weight	Spread out on the universal pan.
05	**Prebaked bread rolls**	Frozen, prebaked	Universal pan with grease-proof paper	0,1-0,8	No	3	Total weight	-
06	**Potato gratin**	-	Ovenproof dish without lid	0,5-3,0	No	2	Total weight	-
07	**Pasta bake**	With pre-cooked pasta	Ovenproof dish without lid	0,4-3,0	No	2	Total weight	-

Programme		Food	Cookware	Weight range in kg	Add liquid	Shelf position	Set weight	Information
08	**Baked potatoes**, whole	Unpeeled, starchy potatoes	Universal pan	0,3-1,5	No	3	Total weight	-
09	**Stew**, with vegetables	Vegetarian	Deep roasting dish with lid	0,5-2,5	As per recipe	2	Total weight	Cut vegetables that take longer to cook (e.g. carrots) into smaller pieces than vegetables that take less time to cook (e.g. tomatoes)
10	**Stew**, with meat	-	Deep roasting dish with lid	0,5-3,0	As per recipe	2	Total weight	Do not sear the meat beforehand
11	**Goulash**	Diced beef or pork with vegetables	Deep roasting dish with lid	0,5-2,5	As per recipe	2	Total weight	Place the meat at the bottom and cover with vegetables. Do not sear the meat beforehand
12	**Fish**, whole	Ready to cook, seasoned	Roaster with lid	0,3-1,5	Cover the bottom of the roasting dish	2	Fish weight	-
13	**Chicken**, not stuffed	Ready to cook, seasoned	Roasting dish with glass lid	0,6-2,5	No	2	Chicken weight	Place in the cookware with the breast at the top
14	**Chicken pieces**	Ready to cook, seasoned	Roaster with lid	0,1-0,8	Cover the bottom of the roasting dish	2	Weight of the heaviest piece	-
15	**Turkey breast**	Whole, seasoned	Roasting dish with glass lid	0,5-2,5	Cover the bottom of the roasting dish, and add up to 250 g vegetables if you wish	2	Turkey breast weight	-
16	**Duck**, unstuffed	Ready to cook, seasoned	Roasting pan without lid	1,0-4,5	No	2	Duck weight	-
17	**Goose**, unstuffed	Ready to cook, seasoned	Roasting pan without lid	2,5-3,5	No	2	Goose weight	-
18	**Pot-roasted beef**	E.g. forerib, shoulder, rump or marinated beef roast	Roaster with lid	0,5-2,5	Meat almost covered with liquid	2	Meat weight	Do not sear the meat beforehand
19	**Sirloin**, medium	Ready to cook, seasoned	Roasting pan without lid	0,5-2,5	No	2	Meat weight	Do not sear the meat beforehand; place in the cookware fatty side up
20	**Beef olives**	Stuffed with vegetables or meat	Roaster with lid	0,5-2,5	Add stock, water or another liquid to the dish until the beef olives are almost covered	2	Total weight of all the stuffed beef olives	Do not sear the meat beforehand
21	**Meat loaf,** fresh	Minced beef, pork or lamb	Roaster with lid	0,5-2,5	No	2	Roast weight	Do not sear the meat beforehand
22	**Leg of lamb**, medium	Boned, seasoned	Roaster with lid	0,5-2,5	Cover the bottom of the roasting dish, and add up to 250 g vegetables if you wish	2	Meat weight	Do not sear the meat beforehand
23	**Leg of lamb**, well done	Boned, seasoned	Roaster with lid	0,5-2,5	Cover the bottom of the roasting dish, and add up to 250 g vegetables if you wish	2	Meat weight	Do not sear the meat beforehand
24	**Joint of veal**, marbled	E.g. saddle or topside	Roaster with lid	0,5-3,0	Cover the bottom of the roasting dish, and add up to 250 g vegetables if you wish	2	Meat weight	Do not sear the meat beforehand

Programme		Food	Cookware	Weight range in kg	Add liquid	Shelf position	Set weight	Information
25	**Joint of veal**, lean	E.g. tenderloin or eye	Roaster with lid	0,5-2,5	Cover the bottom of the roasting dish, and add up to 250 g vegetables if you wish	2	Meat weight	Do not sear the meat beforehand
26	**Leg of roe venison**	Boned, seasoned with salt	Roaster with lid	0,5-2,0	Cover the bottom of the roasting dish, and add up to 250 g vegetables if you wish	2	Meat weight	-
27	**Rabbit**, whole	Ready to cook, seasoned inside	Roasting dish with glass lid	1,0-2,5	Cover the bottom of the roasting dish, and add up to 250 g vegetables if you wish	2	Meat weight	-
28	**Shoulder of pork**	Boned, seasoned	Roasting dish with glass lid	0,5-3,0	Cover the bottom of the roasting dish, and add up to 250 g vegetables if you wish	2	Meat weight	Do not sear the meat beforehand
29	**Joint of pork**, with crackling	E.g. shoulder, seasoned, and scored rind	Roasting dish with glass lid	0,5-3,0	Cover the bottom of the roasting dish, and add up to 250 g vegetables if you wish	2	Meat weight	Place in the cookware fatty side up; salt the rind well
30	**Pork loin roast**	Seasoned	Roasting dish with glass lid	0,5-2,5	Cover the bottom of the roasting dish, and add up to 250 g vegetables if you wish	2	Meat weight	Do not sear the meat beforehand

Setting a programme

The appliance chooses the optimal heating function and the time and temperature setting. All you need to do is set the weight.

The weight can only be set within defined limits.

1. Set the function selector to Programmes ⊞.
2. Use the + or − button to set the required programme.
3. Using the temperature selector, set the weight of your food.

The programme will start after a few seconds.The cooking time will count down on the display.

Once the programme has ended, an audible signal will sound. The cooking time will be zero on the display.

If the food has been cooked to your liking, switch the appliance off by turning the function selector to the "Off" position.

Programme duration

You can find out how long the programme you have set is going to take. Before starting, touch the ◷ button until the "Duration" symbol is highlighted on the display. Touch the ◷ button again until the programme or weight is displayed again.

You cannot change the preset duration of a programme.

Extending the cooking time

Once the programme and the audible signal stop, you can touch the + button to set a new cooking time. The appliance will resume heating using the programme settings.

Note: You can extend the cooking time as many times as required.

If the food has been cooked to your liking, switch the appliance off by turning the function selector to the "Off" position.

Setting a later end time

With some programmes, you can set a later end time. Before starting, touch the ◷ button until the "End" symbol is highlighted on the display. Use the + button to delay the end time.

The appliance switches to standby after it is started.

Changing and cancelling

Once the appliance is started, the programme number and the weight cannot be changed.

The end time can be changed while the appliance is on standby.

If you would like to cancel the programme, switch the appliance off by turning the function selector to the "Off" position.

Tested for you in our cooking studio

Here, you can find a selection of dishes and the ideal settings for them. We will show you which type of heating and temperature are best suited to your dish. You will get information on suitable cooking accessories and the height at which they should be placed in the oven. You will also get tips about cookware and preparation methods.

Note: A lot of steam can build up in the cooking compartment when cooking food.
Your appliance is very energy-efficient and radiates very little heat to its surroundings during operation. Due to the significant differences in temperature between the appliance interior and the external parts of the appliance, condensation may build up on the door, the control panel or the front panels of adjacent kitchen cabinets. This is a normal physical phenomenon. Condensation can be reduced by preheating the oven or opening the door carefully.

General information

Recommended setting values

The table lists the optimal heating function for various types of food. The temperature and cooking time depend on the amount of food and the recipe.For this reason, the table specifies setting ranges. Try using the lower value to start with. A lower temperature will result in more even browning. You can increase the temperature next time if necessary.

Note: Cooking times cannot be reduced by using higher temperatures. The food would only be cooked on the outside, but would not be fully cooked in the middle.

The setting values apply to food placed in the cooking compartment while the cooking compartment is still cold. This will save energy.If you preheat the oven, you can reduce the indicated baking times by several minutes.

Preheating is necessary for selected types of food – this is indicated in the table. Do not place your food and accessory into the cooking compartment until it has finished preheating.

If you wish to follow one of your own recipes, you should use the settings listed in the table for similar food as reference. Additional information can be found in the baking tips listed after the settings tables.

Remove any accessories that are not being used from the cooking compartment. This will allow you to achieve optimal cooking results while saving energy.

Gentle hot air heating function

Gentle hot air is an intelligent heating function that allows you to gently cook meat, fish and baked items. The appliance optimally controls the supply of energy to the cooking compartment. The food is cooked in phases using residual heat. This means that it remains more succulent and browns less. Depending on the method of preparation and the type of food, it is possible to save energy. If you open the appliance door before the food has finished cooking or if you preheat the appliance, you may not be able to achieve this result.

Only use genuine accessories for your appliance. These have been tailored to the cooking compartment and the heating functions of your appliance.Remove any accessories that are not being used from the cooking compartment.

Place the food into the empty cooking compartment before the oven is heated up. Always keep the appliance door closed when cooking.Only cook on one level when using this function.

The Gentle hot air heating function is used to measure both the energy consumption in air recirculation mode and the energy efficiency class.

Baking on one level

When baking on one level, use the following shelf positions:

- Position 2 – tall baked items and tins/dishes on the wire rack
- Position 3 – shallow baked items and baking trays

Baking on two or more levels

Use the hot air heating function. Items that are placed in the oven on baking trays or in baking tins/dishes at the same time will not necessarily be ready at the same time.
Baking on two levels:

- Universal pan, position 3
  Baking tray, position 1
- Baking tins/dishes on the wire rack
  First wire rack, position 3
  Second wire rack, position 1

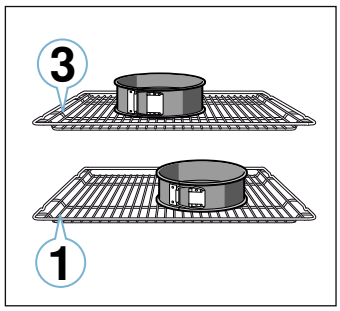

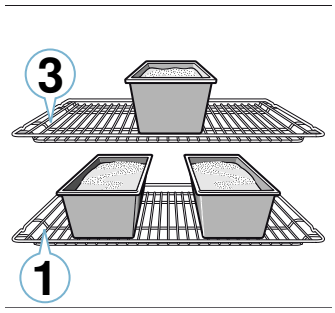

Baking on three levels:

- Baking tray, position 5
  Universal pan, position 3
  Baking tray, position 1

You can cut energy use by cooking different items at the same time. Position baking tins/dishes either next to one another or offset on different shelves so that they are not directly one above the other in the cooking compartment.

Accessories

Only use original accessories supplied with your appliance. These have been tailored to the cooking compartment and the operating modes of your appliance.

Ensure that you always use suitable accessories and that they are placed in the oven the right way around.
→ *"Accessories" on page 17*

Greaseproof paper

Only use greaseproof paper that is suitable for the selected temperature. Always cut greaseproof paper to size.

Cakes and pastries

Your appliance offers you a range of heating types for the preparation of cakes and small baked items. You can find the ideal settings for many dishes in the settings tables.

Also refer to the notes in the section on allowing dough to rise.

Baking tins

For optimal cooking results, we recommend using dark-coloured metal baking tins.

Tinplate baking tins, ceramic dishes and glass dishes extend baking time and mean that the baked item will not brown evenly.

If you are using silicone moulds, follow the manufacturer's instructions and recipes. Silicone moulds are often smaller than normal baking tins. Quantity and recipe specifications may vary.

Frozen products

Do not use frozen products that are heavily frosted. Remove any ice on the food.

Some frozen products may be unevenly pre-baked. Uneven browning may remain even after baking.

Bread and rolls

Caution!
Never pour water into the hot cooking compartment or place cookware containing water onto the bottom of the cooking compartment. The change in temperature can cause damage to the enamel.

Some food turns out better if it is baked in several stages. These dishes are indicated in the table.

The setting values for bread dough apply to both dough placed on a baking tray and dough placed in a loaf tin.

Cakes in tins

Dish	Accessories/cookware	Shelf position	Heating function	Temperature in °C	Cooking time in mins
Sponge cake, simple	Vienna ring tin/loaf tin	2		160-180	50-60
Sponge cake, simple, 2 levels	Vienna ring tin/loaf tin	3+1		140-160	60-80
Sponge cake, delicate	Vienna ring tin/loaf tin	2		150-170	60-80
Sponge flan base	Flan tin	3		160-180	30-40
Fruit tart or cheesecake with shortcrust pastry base	26 cm springform cake tin	2		160-180	70-90
Tart	Tart dish or tin	1		200-240	25-50
Yeast cake	28 cm springform cake tin	2		150-160	25-35
Bundt cake	Bundt cake tin	2		150-170	60-80
3-egg fatless sponge cake	26 cm springform cake tin	2		160-170	30-40
6-egg fatless sponge cake	28 cm springform cake tin	2		160-170	35-45

Cakes on trays

Dish	Accessories/cookware	Shelf position	Heating function	Temperature in °C	Cooking time in mins
Sponge cake with topping	Universal pan	3		160-180	20-45
Small yeast cakes, 2 levels	Universal pan + baking tray	3+1		140-160	30-55
Shortcrust tart with dry topping	Universal pan	2		170-190	25-35
Shortcrust tart with dry topping, 2 levels	Universal pan + baking tray	3+1		160-170	35-45
Shortcrust tart with moist topping	Universal pan	2		160-180	60-90
Yeast cake with dry topping	Universal pan	3		170-180	25-35
Yeast cake with dry topping, 2 levels	Universal pan + baking tray	3+1		150-170	20-30

* Preheat for 10 minutes

Dish	Accessories/cookware	Shelf position	Heating function	Temperature in °C	Cooking time in mins
Yeast cake with moist topping	Universal pan	3		160-180	30-50
Yeast cake with moist topping, 2 levels	Universal pan + baking tray	3+1		150-170	40-65
Plaited loaf, savarin	Universal pan	2		160-170	35-40
Swiss roll	Universal pan	2		170-190*	15-20
Strudel, sweet	Universal pan	2		190-210	55-65
Strudel, frozen	Universal pan	3		180-200	35-45
* Preheat for 10 minutes					

Small baked items

Dish	Accessories/cookware	Shelf position	Heating function	Temperature in °C	Cooking time in mins
Muffins	Muffin tray	2		170-190	20-40
Muffins, 2 levels	Muffin trays	3+1		160-170	30-40
Small yeast cakes	Universal pan	3		150-170	25-35
Small yeast cakes, 2 levels	Universal pan + baking tray	3+1		150-170	25-40
Puff pastry	Universal pan	3		180-200	20-30
Puff pastry, 2 levels	Universal pan + baking tray	3+1		180-200	25-35
Puff pastry, 3 levels	Baking trays + universal pan	5+3+1		170-190	30-45
Choux pastry	Universal pan	3		190-210	35-50
Choux pastry, 2 levels	Universal pan + baking tray	3+1		190-210	35-45

Biscuits

Dish	Accessories/cookware	Shelf position	Heating function	Temperature in °C	Cooking time in mins
Viennese whirls	Universal pan	3		140-150*	30-40
Viennese whirls, 2 levels	Universal pan + baking tray	3+1		140-150*	30-45
Viennese whirls, 3 levels	Baking trays + universal pan	5+3+1		130-140*	40-55
Biscuits	Universal pan	3		140-160	20-30
Biscuits, 2 levels	Universal pan + baking tray	3+1		130-150	25-35
Biscuits, 3 levels	Baking trays + universal pan	5+3+1		130-150	30-40
Meringue	Universal pan	3		80-100	100-150
Meringue, 2 levels	Universal pan + baking tray	3+1		90-100*	100-150
Macaroons	Universal pan	2		100-120	30-40
Macaroons, 2 levels	Universal pan + baking tray	3+1		100-120	35-45
Macaroons, 3 levels	Baking trays + universal pan	5+3+1		100-120	40-50
* Preheat					

Bread and rolls

Dish	Accessories/cookware	Shelf position	Heating function	Step	Temperature in °C	Cooking time in mins
Bread, 750 g (in a loaf tin or free-form)	Universal pan or loaf tin	2		-	180-200	50-60
Bread, 1000 g (in a loaf tin or free-form)	Universal pan or loaf tin	2		-	200-220	35-50
* Preheat						

Dish	Accessories/cookware	Shelf position	Heating function	Step	Temperature in °C	Cooking time in mins
Bread, 1500 g (in a loaf tin or free-form)	Universal pan or loaf tin	2		-	180-200	60-70
Flatbread	Universal pan	3		-	240-250	25-30
Bread rolls, sweet, fresh	Universal pan	3		-	170-180*	20-30
Bread rolls, sweet, fresh, 2 levels	Universal pan + baking tray	3+1		-	160-180*	15-25
Bread rolls, fresh	Universal pan	3		-	200-220	20-30
Toast with topping, 4 slices	Wire rack	3		-	200-220	15-20
Toast with topping, 12 slices	Wire rack	3		-	220-240	15-25

* Preheat

Pizza, quiche and savoury cakes

Dish	Accessories/cookware	Shelf position	Heating function	Temperature in °C	Cooking time in mins
Pizza, fresh	Universal pan	3		170-190	20-30
Pizza, fresh, 2 levels	Universal pan + baking tray	3+1		160-180	35-45
Pizza, fresh, thin-crust	Universal pan	2		250-270*	20-30
Pizza, chilled	Universal pan	1		180-200*	10-15
Pizza, frozen, thin-crust, x 1	Wire rack	2		190-210	15-20
Pizza, frozen, thin-crust, x 2	Universal pan + wire rack	3+1		190-210	20-25
Pizza, frozen, deep-pan, x 1	Wire rack	3		180-200	20-25
Pizza, frozen, deep-pan, x 2	Universal pan + wire rack	3+1		170-190	20-30
Mini pizzas	Universal pan	3		190-210	10-20
Savoury cakes in a tin	28 cm springform cake tin	2		170-190	40-50
Quiche	Tart dish or tin	2		190-210	35-45
Tart	Ovenproof dish	2		170-190	55-65
Empanadas	Universal pan	3		180-190	35-45
Börek	Universal pan	2		220-240	30-40

* Preheat

Baking tips

You want to find out whether the baked item is completely cooked in the middle.	Push a cocktail stick into the highest point on the baked item. If the cocktail stick comes out clean with no dough residue, the baked item is ready.
The baked item collapses.	Next time, use less liquid. Alternatively, set the temperature 10 °C lower and extend the baking time. Adhere to the specified ingredients and preparation instructions in the recipe.
The baked item has risen in the middle but is lower around the edge.	Only grease the base of the springform cake tin. After baking, loosen the baked item carefully with a knife.
The fruit juice overflows.	Next time, use the universal pan.
Small baked items stick to one another during baking.	There should be a gap of approx. 2 cm around each item. This gives enough space for the baked items to expand well and brown on all sides.
The baked item is too dry.	Set the temperature 10 °C higher and shorten the baking time.
The baked item is too light in colour overall.	If the shelf position and the accessories are correct, then you should increase the temperature if necessary or extend the baking time.
The baked item is too light on top, and too dark underneath.	Bake the cake one level higher in the oven the next time.
The baked item is too dark on top, and too light underneath.	Bake the cake one level lower in the oven the next time. Select a lower temperature and extend the baking time.

The baked item is too dark in a tin or loaf tin.	Place the baking tray in the middle of the accessory, not directly against the back wall.
The baked item is too dark in colour overall.	Select a lower temperature next time and extend the baking time if necessary.
The baked item is unevenly browned.	Select a slightly lower temperature. Protruding greaseproof paper can affect the air circulation. Always cut greaseproof paper to size. Ensure that the baking tin does not stand directly in front of the openings in the cooking compartment back wall. When baking small items, you should use similar sizes and thicknesses wherever possible.
You were baking on several levels. The items on the top baking tray are darker than those on the lower baking tray.	Always select hot air when baking on several levels. Baked items that are placed into the oven on trays or in baking tins at the same time will not necessarily be ready at the same time.
The baked item looks good, but is not cooked properly in the middle.	Use a lower temperature and bake slightly longer; if necessary, add slightly less liquid. For baked items with a moist topping, bake the base first. Sprinkle it with almonds or breadcrumbs and then place the topping on top.
The baked item cannot be turned out of the dish when it is turned upside down.	Allow the baked item to cool down for 5 to 10 minutes after baking. If it still sticks, carefully loosen it around the edges again using a knife. Turn the baked item upside down again and cover it several times with a cold, wet cloth. Next time, grease the baking tin and sprinkle with breadcrumbs.

Bakes and gratins

Your appliance offers a range of heating functions for cooking bakes. The settings tables list the optimal settings for a wide range of dishes.

How well cooked a bake is will depend on the size of the cookware and the shelf position of the bake.

Use wide, shallow cookware for bakes and gratins. Food takes longer to cook in deep, narrow cookware and it browns more on top.

Always use the shelf positions indicated.

You can cook food on one level in baking tins/dishes or in the universal pan.

- Baking tins/dishes on the wire rack: Position 2
- Universal pan, position 3

You can cut energy use by cooking different items at the same time. Position baking tins/dishes next to one another in the cooking compartment.

Dish	Accessories/cookware	Shelf position	Heating function	Temperature in °C	Cooking time in mins
Bake, savoury, cooked ingredients	Ovenproof dish	2		200-220	30-60
Bake, sweet	Ovenproof dish	2		180-200	50-60
Potato gratin, raw ingredients, 4 cm deep	Ovenproof dish	2		150-170	60-80
Potato gratin, raw ingredients, 4 cm deep, 2 levels	Ovenproof dish	3+1		150-160	70-80

Poultry, meat and fish

Your appliance offers you a range of heating types for preparing poultry, meat and fish. You can find the ideal settings for certain dishes in the settings tables.

Roasting on the wire rack

Roasting on the wire rack works particularly well for large poultry or for multiple pieces at the same time.

Place the food to be grilled directly onto the wire rack. If you are grilling a single piece, place it in the centre of the wire rack for best results.

The universal pan should also be inserted at position 1. This will catch the meat juices that drip down and keeps the cooking compartment clean.

Add up to ½ litre of water to the universal pan, depending on the size and type of joint. This will catch the liquid that drips down. You can make a sauce from these juices. This will also result in less smoke being produced and keep the cooking compartment clean.

Roasting in cookware

⚠ Warning – Risk of injury caused by shattering glass!
Place hot glass cookware on a dry mat after cooking. If the surface is damp or cold, the glass may crack.

⚠ Warning – Risk of scalding!
Very hot steam may escape when opening the lid after cooking. Lift the lid at the rear, so that the hot steam can escape away from you.

Only use cookware which is suitable for use in an oven. Glass cookware is best. Check whether the cookware fits in the cooking compartment.

Shiny roasting dishes made from stainless steel or aluminium reflect heat like a mirror and are therefore not particularly suitable. The poultry, meat and fish cooks slower and does not brown so well. Use a higher temperature and/or a longer cooking time.

Observe the manufacturer's instructions for your roasting cookware.

Uncovered cookware
To cook poultry, meat and fish, it is best to use a deep roasting tin. Place the tin onto the wire rack. If you do not have any suitable cookware, use the universal pan.

Covered cookware
When cooking with covered cookware, the cooking compartment remains considerably cleaner. Ensure that the lid fits well and closes properly. Place the cookware onto the wire rack.

Poultry, meat and fish can also become crispy in a covered roasting dish. Simply use a roasting dish with a glass lid and set a higher temperature.

Grilling

Keep the appliance door closed when using the grill. Never grill with the appliance door open.

Place the food to be grilled on the wire rack. In addition, slide the universal pan in at least one shelf position lower, with the slanted edge facing the appliance door. Any dripping fat will be caught.

When grilling, try wherever possible to use pieces of food which are of a similar thickness and weight. This will allow them to brown evenly and remain succulent and juicy. Place the food to be grilled directly onto the wire rack.

Use tongs to turn the pieces of food you are grilling. If you pierce the meat with a fork, the juices will run out and it will become dry.

Do not add salt to the meat until it has been grilled. Salt draws water from the meat.

Notes

- The grill element switches itself on and off repeatedly; this is normal. The grill setting determines how frequently this occurs.
- Smoke may be produced when grilling.
- When you are using the grill, do not insert the baking tray or universal pan into the cooking compartment any higher than shelf position 3. The high temperatures at the top of the cooking compartment can warp accessories, which may damage the cooking compartment when removed.

Meat thermometer

Depending on your appliance's features, you may have a meat thermometer. You can cook accurately using a meat thermometer. Read important notes on using the meat thermometer in the corresponding chapter. There, you can find notes on inserting the meat thermometer, the possible heating types and additional information.

Recommended setting values

The setting values are based on the assumption that unstuffed, chilled, ready-to-roast poultry, meat or fish is placed into a cold cooking compartment.

In the table, you can find specifications for poultry, meat and fish with default values for the weight. If you wish to prepare heavier poultry, meat or fish, always use the lower temperature. If roasting several joints, use the weight of the heaviest piece as a basis for determining the cooking time. The individual pieces should be approximately equal in size.

The larger the poultry, meat or fish is, the lower the cooking temperature and the longer the cooking time.

Turn the poultry, meat and fish after approx. ½ to ⅔ of the indicated time.

Poultry

When cooking duck or goose, pierce the skin on the underside of the wings. This allows the fat to run out.

If using duck breast, score the skin. Do not turn duck breasts.

Add some liquid to the poultry in the dish. Cover the base of the ovenware with approx. 1-2 cm of liquid.

When you turn poultry, ensure that the breast side or the skin side is underneath at first.

Poultry will turn out particularly crispy and brown if you baste it towards the end of the roasting time with butter, salted water or orange juice.

Meat

Baste lean meat with fat as required or cover it with strips of bacon.

When roasting, add a little liquid if the meat is lean. A covering of approx. ½ cm depth should be applied to the base of any glass cookware.

Score the rind crosswise. If you turn the joint when cooking, ensure that the rind is underneath at first.

When the joint is ready, turn off the oven and allow it to rest for another 10 minutes in the cooking compartment. This allows the meat juices to be better distributed. Wrap the joint in aluminium foil if necessary. The recommended resting time is not included in the cooking time indicated.

It is more convenient to roast and braise meat in cookware. You can take the joint out of the cooking compartment more easily in the cookware, and prepare the sauce in the cookware itself.

The quantity of liquid is dependent on the type of meat, the cookware material and also on whether or not a lid is used. If preparing meat in an enamelled or dark metal roasting dish, it will need a little more liquid than if cooked in glass cookware.

The steam evaporates in the cookware when roasting. Carefully pour in more liquid if required.

The distance between the meat and the lid should be at least 3 cm. The meat may rise.

If necessary, braise the meat first by searing it. Add water, wine, vinegar or a similar liquid to the braising liquid. A covering approx. 1-2 cm deep should be applied to the base of the cookware.

Fish

Fish cooked whole does not have to be turned. Place the whole fish into the cooking compartment in swimming position with the dorsal fin facing upwards. Placing half a potato or a small oven-proof container in the stomach cavity of the fish will provide stability.

You can tell when the fish is cooked because the dorsal fin can be removed easily.

When stewing, add two to three tablespoons of liquid and a little lemon juice or vinegar into the cookware.

Poultry

Dish	Accessories/cookware	Shelf position	Heating function	Temperature in °C	Cooking time in mins
Chicken, 1.3 kg	Wire rack	2		200-220	60-70
Small chicken portions, 250 g each	Wire rack	3		220-230	30-35
Chicken goujons, nuggets, frozen	Universal pan	3		190-210	20-25
Duck, 2 kg	Wire rack	2		190-210	100-110
Duck breast, medium, 300 g each	Wire rack	3		240-260	30-40
Goose, 3 kg	Wire rack	2		170-190	120-140
Goose legs, 350 g each	Wire rack	3		220-240	40-50
Small turkey, 2.5 kg	Wire rack	2		180-200	80-100
Turkey breast, boned, 1 kg	Cookware, covered	2		240-260	80-100
Turkey thigh, bone in, 1 kg	Wire rack	2		180-200	90-100

Meat

Dish	Accessories/cookware	Shelf position	Heating function	Step	Temperature in °C	Cooking time in mins
Joint of pork without rind, e.g. neck, 1.5 kg	Cookware, uncovered	1		-	180-200	140-160
Joint of pork with rind, e.g. shoulder, 2 kg	Cookware, uncovered	1		-	170-190	190-200
Pork tenderloin steak, 1.5 kg	Cookware, uncovered	2		-	190-210	130-140
Pork steaks, 2 cm thick	Wire rack	4		-	3	20-25**
Fillet of beef, medium, 1 kg	Cookware, uncovered	3		-	210-220	45-55
Pot-roasted beef, 1.5 kg	Cookware, uncovered	2		-	200-220	100-120
Sirloin, medium, 1.5 kg	Cookware, uncovered	2		-	200-220	60-70
Burger, 3-4 cm thick	Wire rack	4		-	3	25-30**
Joint of veal, 1.5 kg	Cookware, uncovered	2		-	180-200	120-140
Knuckle of veal, 1.5 kg	Cookware, uncovered	2		-	210-230	130-150
Leg of lamb, boned, medium, 1.5 kg	Cookware, uncovered	2		-	170-190	70-80*
Saddle of lamb on the bone, medium, 1.5 kg	Wire rack	2		-	180-190	45-55*/**
Grilling sausages	Wire rack	3		-	3	20-25**
Meat loaf, 1 kg	Cookware, uncovered	2		-	170-180	70-80

* Do not turn
** Slide the universal pan in at shelf position 1

Fish

Fish	Weight	Accessories and cookware	Position	Heating function	Temperature in °C, grill setting	Cooking time in minutes
Fish, whole	Approx. 300 g each	Wire rack	2		2	20-25
	1.0 kg	Wire rack	2		180-200	45-50
	1.5 kg	Wire rack	2		170-190	50-60
Fish steak, 3 cm thick		Wire rack	3		2	20-25

Tips on roasting and braising

The cooking compartment becomes very dirty.	Prepare your food in an enclosed roasting dish with higher temperature or use the grill tray. You will achieve the best roasting results if you use the grill tray. The grill tray can be bought later as a special accessory.
The roast is too dark and the crackling is burned in places, and/or the roast is too dry.	Check the shelf position and temperature. Select a lower temperature the next time and reduce the roasting time if necessary.
The crackling is too thin.	Increase the temperature or switch on the grill briefly at the end of the roasting time.
The roast looks good but the juices are burnt.	Next time, use a smaller roasting dish and add more liquid if necessary.
The roast looks good but the juices are too clear and watery.	Next time, use a larger roasting dish and add less liquid if necessary.
The meat gets burned during braising.	The roasting dish and lid must fit together well and close properly. Reduce the temperature and add more liquid when braising if necessary.

Vegetables and side dishes

Here, you can find information for preparing grilled vegetables, potatoes and frozen potato products.

Adhere to the specifications in the table.

Dish	Accessories/cookware	Shelf position	Heating function	Temperature in °C	Cooking time in mins
Grilled vegetables	Universal pan	5		3	10-20
Baked potatoes, halved	Universal pan	3		160-180	45-60
Potato products, frozen, e.g. chips, croquettes, potato pockets, rösti	Universal pan	3		200-220	25-35
Chips, 2 levels	Universal pan + baking tray	3+1		190-210	30-40

Yoghurt

You can use your appliance to make your own yoghurt.

Remove accessories and shelf supports from the cooking compartment. The cooking compartment must be empty.

1. Heat 1 litre of milk (3.5% fat) to 90 °C on the hob and then leave it to cool down to 40 °C.
   It is sufficient to heat UHT milk to 40 °C.
2. Stir in 30 g (approx. 1 tbsp) (chilled) yoghurt.
3. Pour into cups or small jars with lids and cover.
4. Place the cups or jars onto the cooking compartment floor and use the settings indicated in the table.
5. After making the yoghurt, leave it to cool in the refrigerator.

Dish	Accessories/cookware	Shelf position	Heating function	Temperature in °C	Cooking time
Yoghurt	Cup/jar	Cooking compartment floor		-	4-5h

Acrylamide in foodstuffs

Acrylamide is mainly produced in grain and potato products prepared at high temperatures, such as potato crisps, chips, sliced bread, bread rolls, bread or fine baked goods (biscuits, gingerbread, spiced biscuit).

Tips for keeping acrylamide to a minimum	
General	■ Keep cooking times as short as possible. ■ Cook food until it is golden brown, but not too dark. ■ Large, thick pieces of food contain less acrylamide.
Baking	With top/bottom heating at max. 200 °C. With hot air at max. 180 °C.
Biscuits	With top/bottom heating at max. 190 °C. With hot air at max. 170 °C. Egg or egg yolk reduces the production of acrylamide.
Oven chips	Spread out a single layer evenly on the baking tray. Cook approx. 400-600 g at once on a baking tray so that the chips do not dry out and become crunchy.

Slow cooking

Slow cooking is a technique for cooking food over a long period at low temperatures. For this reason, it is also called "low-temperature cooking".

Slow cooking is ideal for all prime cuts (e.g. tender portions of beef, veal, pork, lamb or poultry) which are to be cooked "à point". The meat will remain succulent and tender.

The benefit of this cooking method is that it allows lots of scope for menu planning because slow-cooked meat is easy to keep warm. You do not have to turn the meat when cooking. Keep the appliance door closed in order to maintain an even cooking climate.

Only use fresh, clean and hygienic meat without bones. Carefully remove sinews and fat from around the edge. Fat develops a strong, distinct taste during slow cooking. You can also use seasoned or marinated meat. Do not use defrosted meat.

Meat can be carved immediately following slow cooking. No standing time is required. Due to the special cooking method, the meat looks pink, but is not raw or undercooked.

The slow cooking temperature and cooking time are dependent on the size, thickness and quality of the meat. For this reason, the table specifies setting ranges.

Note: Delayed-start operation with an end time is not possible when slow cooking.

Cookware

Use shallow cookware, e.g. a glass/porcelain serving dish. Place the cookware into the cooking compartment to preheat it.

Always place the uncovered cookware onto the wire rack at level 2.

You can find additional information in the tips on slow cooking attached to the settings table.

Only start operation when the cooking compartment has fully cooled down. Allow the cooking compartment to warm up for approx. 15 minutes with the cookware inside.

Sear the meat on the hotplate at a very high heat and for a sufficiently long time on all sides, even on the ends. Place into the preheated cookware right away. Place the cookware containing the meat into the cooking compartment once again and cook slowly.

Dish	Accessories/cook-ware	Shelf posi-tion	Heating function	Searing time in min	Tempera-ture in °C	Cooking time in min
Duck breast, 300 g each	Cookware, uncovered	2		6-8	95*	60-70
Chicken breast fillet, 200 g each, well done	Cookware, uncovered	2		4	120*	80-110
Turkey breast, boned, 6.5-8.5 cm thick, 1 kg, well done	Cookware, uncovered	2		6-8	120*	140-180
Pork tenderloin steak, 5-6 cm thick, 1.5 kg	Cookware, uncovered	2		6-8	85*	150-210
Fillet of pork, whole	Cookware, uncovered	2		4-6	85*	75-100
Rump steak, 6-7 cm thick, 1.5 kg, well done	Cookware, uncovered	2		6-8	100*	160-220
Fillet of beef, 4-6 cm thick, 1 kg	Cookware, uncovered	2		6-8	85*	90-150
Sirloin, 5-6 cm thick, 1.5 kg	Cookware, uncovered	2		6-8	85*	150-210
Beef medallions/rump steak, 4 cm thick	Cookware, uncovered	2		4	80*	50-90
Flank of veal, 7-10 cm thick, 1.5 kg	Cookware, uncovered	2		6-8	85*	250-310
Fillet of veal, whole	Cookware, uncovered	2		4-6	85*	100-160

* Preheat

Dish	Accessories/cook-ware	Shelf posi-tion	Heating function	Searing time in min	Tempera-ture in °C	Cooking time in min
Veal medallions, 4 cm thick	Cookware, uncovered	2		4	80*	50-70
Saddle of lamb, boneless, 200 g each	Cookware, uncovered	2		4	85*	30-70
Leg of lamb, boned, 1 kg, tied	Cookware, uncovered	2		6-8	95*	100-160
* Preheat						

Tips for slow cooking

Slow-cooking duck breast.	Place the cold duck breast into a pan and fry the skin side first. After slow cooking, grill for 3 to 5 minutes until crispy.
The slow-cooked meat is not as hot as conventionally roasted meat.	So that the roasted meat does not cool so quickly, warm the plates and serve the sauces very hot.

Drying

You can achieve outstanding drying results with hot air. With this type of preserving, flavours are concentrated as a result of the dehydration.

Only use unblemished, fresh fruit, vegetables and herbs and wash them thoroughly. Line the wire rack with greaseproof paper or parchment paper. Drain the excess water from the fruit and then dry the fruit thoroughly.

If necessary, cut it into pieces of equal size or slice it thinly. Place unpeeled fruit onto the dish with the sliced surfaces facing upwards. Ensure that neither fruit nor mushrooms overlap on the wire rack.

Grate vegetables and then blanch them. Drain the excess water from the blanched vegetables and spread them evenly on the wire rack.

Dry herbs on the stem. Spread the herbs out evenly and slightly heaped on the wire rack.

Use the following shelf positions for drying:
- 1 wire rack: Position 3
- 2 wire racks: Positions 3 + 1

Turn very juicy fruit and vegetables several times. After drying, remove the dried food from the paper immediately.

In the table, you will find settings for drying various foodstuffs. The temperature and drying time are dependent on the type, moisture, ripeness and thickness of the food. The longer you leave the food to be dried, the better it will be preserved. The more thinly you slice the food, the more quickly it will dry and the more flavour it will retain.For this reason, the table specifies setting ranges.

If you wish to dry food that is not listed in the table, you should use the settings listed in the table for similar food as reference.

Fruit, vegetables and herbs	Accessories	Heating function	Temperature in °C	Cooking time in hours
Pomes (apple rings, 3 mm thick, 200 g per wire rack)	1-2 wire racks		80	4-8
Root vegetables (carrots), grated, blanched	1-2 wire racks		80	4-7
Sliced mushrooms	1-2 wire racks		80	5-8
Herbs, washed	1-2 wire racks		60	2-5

Preserving

For preserving, the jars and rubber seals must be clean and intact. If possible, use jars of the same size. The information in the table is for round, one-litre jars.

Caution!

Do not use jars that are larger or taller than this. The lids could crack.

Only use fruit and vegetables in good condition. Wash them thoroughly.

The times given in the tables are a guide only. The time will depend on the room temperature, number of jars, and the quantity and temperature of the contents. Before you switch off the appliance or change the cooking mode, check whether the contents of the jars are bubbling as they should.

Preparation

1. Fill the jars, but not to the top.
2. Wipe the rims of the jars, as they must be clean.
3. Place a damp rubber seal and a lid on each jar.
4. Seal the jars with the clips.

Place no more than six jars in the cooking compartment.

Settings

1. Insert the universal pan at level 2. Arrange the preserving jars so that they do not touch each other.
2. Pour ½ litre of water (approx. 80 °C) into the universal pan.
3. Close the oven door.
4. Set Bottom heat.
5. Set the temperature to 170 - 180 °C.

Preserving

Fruit
After approx. 40 to 50 minutes, small bubbles begin to form at short intervals. Switch off the oven.

After 25 to 35 minutes of residual heat, remove the preserving jars from the cooking compartment. If they are allowed to cool for longer in the cooking compartment, germs could multiply, promoting acidification of the preserved fruit.

Fruit in one-litre jars	When it starts to bubble	Residual heat
Apples, redcurrants, strawberries	Switch off	approx. 25 minutes
Cherries, apricots, peaches, gooseberries	Switch off	approx. 30 minutes
Apple purée, pears, plums	Switch off	approx. 35 minutes

Vegetables
As soon as bubbles begin to form in the jars, set the temperature back to between 120 and 140 °C.

Depending on the type of vegetable, heat for approx. 35 to 70 minutes. Switch off the oven after this time and use the residual heat.

Vegetables with cold cooking water in one-litre jars	When it starts to bubble	Residual heat
Gherkins	-	approx. 35 minutes
Beetroot	approx. 35 minutes	approx. 30 minutes
Brussels sprouts	approx. 45 minutes	approx. 30 minutes
Beans, kohlrabi, red cabbage	approx. 60 minutes	approx. 30 minutes
Peas	approx. 70 minutes	approx. 30 minutes

Taking out the jars

After preserving, remove the jars from the cooking compartment.

Caution!

Do not place the hot jars on a cold or wet surface. They could suddenly burst.

Prove dough

Your yeast dough will prove considerably more quickly using this heating function than at room temperature and will not dry out. Do not start the appliance if the cooking compartment is not completely cool.

Always allow yeast dough to prove twice.Use the settings indicated in the settings tables for the first and second proving stages (dough fermentation stage and final fermentation stage).

Dough fermentation
Place the dough into a heat-resistant bowl and place this onto the wire rack. Use the settings indicated in the table.

Do not open the appliance door while the dough is proving, otherwise moisture will escape. Do not cover the dough.

Condensation builds up during the proving process, which steams up the door panel. Wipe out the cooking compartment after dough proving.Remove any limescale with a little vinegar and wipe with clean water.

Final fermentation
Place your dough into the oven at the shelf position indicated in the table.

If you want to preheat the oven, the final fermentation stage takes place outside the appliance in a warm place.

The temperature and proving time are dependent on the type and quantity of the ingredients. For this reason, the values indicated in the settings table are intended as a guide only.

Dish	Accessories/cookware	Shelf position	Type of heating	Step	Temperature in °C	Cooking time in mins
Yeast dough, light	Bowl	2		1.	35-40	25-30
	Baking tray	2		2.	35-40	10-20
Yeast dough, heavy and rich	Bowl	2		1.	35-40	60-75
	Heat-resistant cookware	2		2.	35-40	45-60

Defrosting

For defrosting frozen fruit, vegetables and baked items. Poultry, meat and fish should ideally be defrosted in the refrigerator. Not suitable for cream cakes or cream gateaux.

Use the following shelf positions when defrosting:
- 1 wire rack: Position 2
- 2 wire racks: Positions 3 + 1

Tip: Food that has been frozen flat or in portions defrosts more quickly than food items frozen in a block.

Remove frozen food from its packaging and place it onto the wire rack in suitable cookware.

Redistribute the food or turn it once or twice as it defrosts. Large pieces of food should be turned several times.As the food defrosts, break up any clumps and remove items that have already defrosted from the appliance.

To allow the temperature to equalise, leave the defrosted food to rest for another 10 to 30 minutes in the appliance after switching it off.

Frozen food	Accessories	Position	Heating function	Temperature
For example cream gateaux, buttercream cakes, gateaux with chocolate or sugar icing, fruit, chicken, sausage and meat, bread and bread rolls, cakes and other baked items	Wire rack	2		The temperature selector must remain in the "Off" position

Keeping warm

You can keep cooked dishes warm using the top/bottom heating type at 70 °C. This will avoid condensation developing, and means you will not have to wipe out the cooking compartment.

Do not keep cooked dishes warm for longer than two hours. Be aware that some dishes may continue cooking whilst being kept warm. Cover the dishes if necessary.

Test dishes

These tables have been produced for test institutes to facilitate appliance testing.

As per EN 60350-1.

Baking

Items that are placed in the oven on baking trays or in baking tins/dishes at the same time will not necessarily be ready at the same time.

Shelf positions for baking on two levels:
- Universal pan, position 3
  Baking tray, position 1
- Baking tins/dishes on the wire rack
  First wire rack, position 3
  Second wire rack, position 1

Shelf positions for baking on three levels:
- Baking tray, position 5
- Universal pan, position 3
- Baking tray: Position 1

Baking with two springform tins:
- On one level (figure 1)
- On two levels (figure 2)

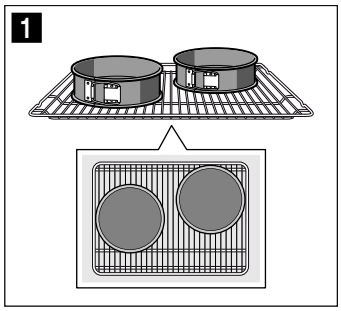

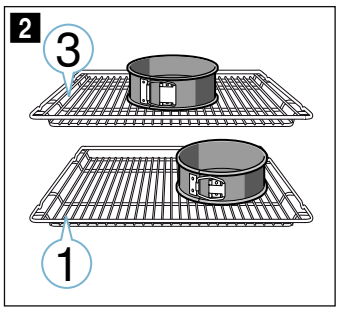

Notes
- The setting values apply to dishes placed into a cold cooking compartment.
- Please note the information in the tables about preheating. The setting values are valid without rapid heating-up.
- For baking, use the lower of the indicated temperatures first.

Grilling

Also slide in the universal pan. The liquid will be caught and the cooking compartment stays cleaner.

Baking

Dish	Accessories/cookware	Shelf position	Heating function	Temperature in °C	Cooking time in mins
Viennese whirls	Universal pan	3		140-150*	25-35
Viennese whirls, 2 levels	Universal pan + baking tray	3+1		140-150*	30-45
Viennese whirls, 3 levels	Baking trays + universal pan	5+3+1		130-140*	35-50
Small cakes	Universal pan	3		160-170*	20-35
Small cakes, 2 levels	Universal pan + baking tray	3+1		140-160*	30-40
Small cakes, 3 levels	Baking trays + universal pan	5+3+1		130-150*	35-55
Hot water sponge cake	26 cm springform cake tin	2		160-170*	30-40
Hot water sponge cake, 2 levels	26 cm springform cake tin	3+1		150-160*	35-50
Double-crusted apple pie	2 x 20 cm black cake tins	2		170-190	80-100
Double-crusted apple pie, 2 levels	2 x 20 cm black cake tins	3+1		170-190	70-90

* Preheat; do not use rapid heat-up function

Grilling

Dish	Accessories	Shelf position	Heating function	Temperature in °C	Cooking time in mins
Toasting bread Preheat for 10 min	Wire rack	5		3	0,2-1,5
Beefburgers, x 12 * Do not preheat	Wire rack	4		3	25-30*

* Turn after 2/3 of the total time

Thank you for buying a Bosch Home Appliance!

Register your new device on MyBosch now and profit directly from:

- **Expert tips & tricks for your appliance**
- **Warranty extension options**
- **Discounts for accessories & spare-parts**
- **Digital manual and all appliance data at hand**
- **Easy access to Bosch Home Appliances Service**

Free and easy registration – also on mobile phones:
www.bosch-home.com/welcome

Looking for help? You´ll find it here.

Expert advice for your Bosch home appliances, need help with problems or a repair from Bosch experts.
Find out everything about the many ways Bosch can support you:
www.bosch-home.com/service
Contact data of all countries are listed in the attached service directory.

Robert Bosch Hausgeräte GmbH
Carl-Wery-Straße 34
81739 München
Germany
www.bosch-home.com

9001463884
020599(A)