Register your new Bosch now:
www.bosch-home.com/welcome

Dishwasher
SHP87P****, SHX87P****, SHXM98***, SHXM88****, SHPM88****, SHVM88****, SHPM78****, SHP878****, SHXM78****, SHVM78****, SHX878****, SHV878****

en-us Operating instructions

Table of contents

Safety Definitions 5

IMPORTANT SAFETY INSTRUCTIONS 6

Causes of Damage 9

Getting Started 10

Rinse Aid. 13

Loading the Dishwasher 15

Detergent 27

Dishwasher Cycles 29

Dishwasher Cycle Options . .30

Operating the Dishwasher. . .34

Care and Maintenance 39

Troubleshooting 44

Customer Service. 49

Statement of Limited Product Warranty 50

Dear Valued Customer,

Thank you for selecting a Bosch® dishwasher. You have joined the many consumers who demand quiet and superior performance from their dishwashers.

This manual was written with your safety and convenience in mind, and the information contained herein is very important. We highly recommend that you read this manual before using your dishwasher for the first time.

To learn more about your dishwasher and available accessories, as well as many other top quality Bosch appliances, visit our web site at:

www.bosch-home.com/us (USA)
or
www.bosch-home.ca (Canada)

While there, don't forget to register your new dishwasher by clicking on the "Support" tab or filling out the product registration card enclosed with your new unit.

If you have any questions or comments, please contact us by phone at:

1-800-944-2904

or write us at:

BSH Home Appliances Corporation
1901 Main Street, Suite 600
Irvine, CA 92614

Safety Definitions

WARNING

This indicates that death or serious injuries may occur as a result of non-observance of this warning.

CAUTION

This indicates that minor or moderate injuries may occur as a result of non-observance of this warning.

NOTICE

This indicates that damage to the appliance or property may occur as a result of non-compliance with this advisory.

Note: This alerts you to important information and/or tips.

IMPORTANT SAFETY INSTRUCTIONS

READ AND SAVE THESE INSTRUCTIONS

This dishwasher is provided with Installation Instructions and this Use and Care Manual. Read and understand all instructions before using the dishwasher.

This dishwasher is intended for use up to a maximum altitude of 13,000 ft (4,000 meters) above sea level.

To reduce the risk of fire, electrical shock, or serious injury, observe the following:

WARNING

RISK OF INJURY OR DEATH!
Misuse of the dishwasher can result in serious injury or death. Do not use the dishwasher in any way not covered in this manual or for any purpose other than those explained in the following pages.

WARNING

RISK OF INJURY!
Severe injury and/or product damage could result from the use of unauthorized service technicians or non-original replacement parts. All repairs must be performed by an authorized service technician using only original equipment factory replacement parts.

WARNING

RISK OF ELECTRICAL SHOCK OR FIRE!
Electrical shock or fire could result if the electrical supply for the dishwasher covered in this manual is incorrectly installed or if the dishwasher has been improperly grounded. Do not use the dishwasher covered in this manual unless you are certain the electrical supply has been correctly installed and the dishwasher has been properly grounded.

WARNING

RISK OF EXPLOSION!

- Under certain conditions, hydrogen gas may be produced in a hot water system that has not been used for two weeks or more. Hydrogen gas is explosive. Before using a dishwasher that is connected to a hot water system that has been unused for two weeks or longer, turn on all hot water faucets and let the water flow from each for several minutes. This will release any accumulated hydrogen gas. As the gas is explosive, do not smoke or use an open flame during this time.
- When cleaning your dishwasher with any cleaning agent, remove all cookware, utensils or any foreign material from inside. Some cleaning agents are highly acidic and/or caustic alkaline, which can cause

hydrogen gas to form if aluminum material is also inside the dishwasher tub. Hydrogen gas is explosive. **Refer to the Care and Maintenance section of the dishwasher Use and Care manual for instructions on how to properly clean your dishwasher.**

WARNING

HEALTH HAZARD!
Never use harsh chemicals to clean your dishwasher. Some bleach-based products can damage your dishwasher and may present health hazards!

WARNING

RISK OF ELECTRIC SHOCK!
This appliance must be grounded. In the event of a malfunction or breakdown, grounding will reduce the risk of electric shock by providing a path of least resistance for electric current. This appliance is equipped with a cord having an equipment-grounding conductor.
Improper connection of the equipment-grounding conductor can result in risk of electric shock. Check with a qualified electrician if you are in doubt whether the appliance is properly grounded.

GROUNDING INSTRUCTIONS

This appliance must be grounded to a metal, permanent wiring system or an equipment grounding conductor must be run with the circuit conductors and connected to the equipment grounding terminal or lead on the dishwasher. See the Installation Instructions included with this dishwasher for more information on electrical requirements.

Safe Operation

Use this dishwasher only for its intended function, which is the washing of household dishware and kitchenware rated as dishwasher safe.

Use only detergents or rinsing agents recommended for use in a dishwasher, and keep them out of the reach of children.

CAUTION

When loading items to be washed:

- Locate sharp items so they are not likely to damage the door seal.
- Load knives and other sharp utensils with their HANDLES UP to reduce the risk of cut-type injuries.

- Do not wash plastic items unless they are marked “dishwasher safe” or the equivalent. For plastic items not so marked, check the manufacturer’s recommendations.
- Do not operate your dishwasher unless all enclosure panels are in place.
- Do not tamper with or override controls and interlocks.

Do not abuse, sit or stand on the door or dish racks of the dishwasher.

WARNING

RISK OF INJURY!
To avoid risk of injury, always use caution when opening the door during or following a wash cycle as hot water or steam may escape. Do not fully open the door until water noises have stopped and steam has subsided.

WARNING

CHILD SAFETY!
- To reduce risk of injury, do not allow children to play in or on the dishwasher.
- When children become old enough to operate the appliance, it is the responsibility of the parents/legal guardians to ensure the children are instructed in safe practices by qualified persons.

NSF/ANSI 184 Certified residential dishwashers are not intended for licensed food establishments.

Proper Care and Maintenance

Remove the dishwasher door to the washing compartment when removing an old dishwasher for service or discarding.

To avoid floor damage and possible mold growth, do not allow wet areas to remain around or under the dishwasher.

Note: To avoid dishwasher damage, do not allow water to remain in your dishwasher systems through extended periods of freezing temperatures. Freezing temperatures can damage the water fill valve and potentially other components of your dishwasher.

NOTICE

It is highly recommended for the end user to become familiar with the procedure to shut off the incoming water supply and the procedure to shut off the incoming power supply. See the Installation Instructions or contact your installer for more information.

Proposition 65 Warning:

This product may contain a chemical known to the State of California, which can cause cancer or reproductive harm. Therefore, the packaging of your product may bear the following label as required by California:

STATE OF CALIFORNIA PROPOSITION 65 WARNING:

WARNING
Cancer and Reproductive Harm - **www.P65Warnings.ca.gov**

Causes of Damage

NOTICES

- Never use steam cleaning products to clean your dishwasher. The manufacturer will not be liable for the possible damages or consequences.
- Bleach-based wipes can cause stainless-steel doors and tubs to rust.
- Using harsh chemicals (e.g. bleach), abrasive cleaners, scouring pads (metal or plastic), or abrasive cloths/paper towels can damage your dishwasher's exterior door panel, fascia panel and buttons.
- To avoid dishwasher damage, do not load the dishwasher with paper products, plastic bags, packing materials or anything other than normal, dishwasher safe dishware and kitchenware.

Getting Started

Appliance overview

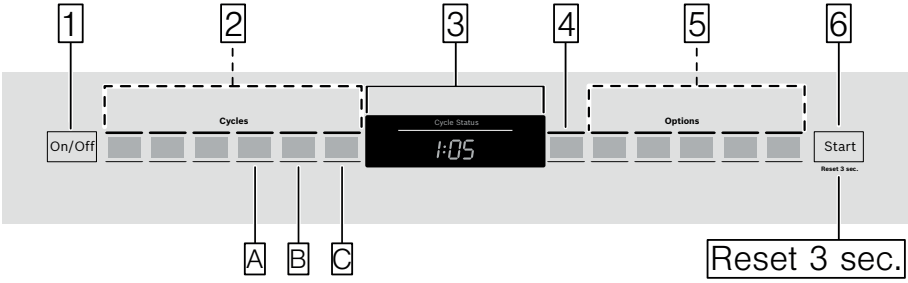

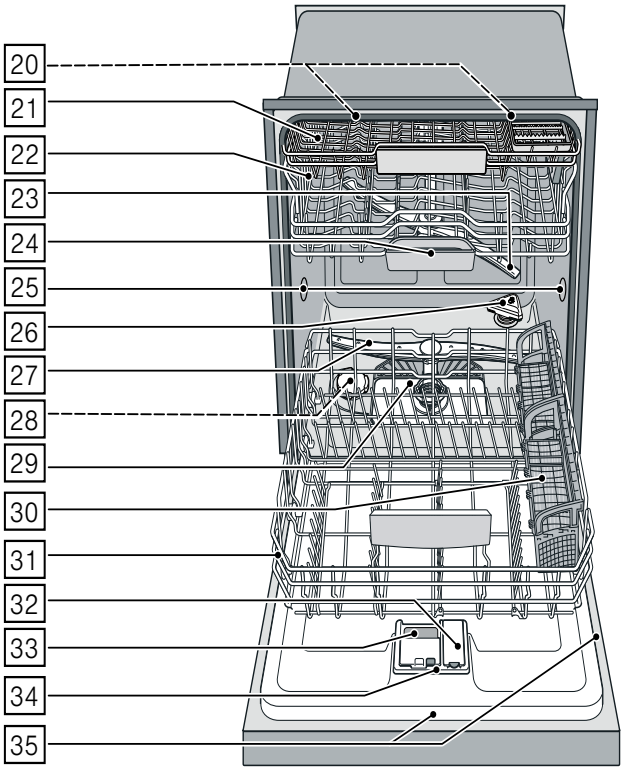

The dotted lines show optional features which may or may not be included with your dishwasher.

The numbers stated below refer to the overview images on the previous page of this manual.

Operating panel

1 On/Off button
2 Wash cycles
3 Digital display
4 Delay start button
5 Wash cycle options
6 Start button

Note: Some of the wash cycles and options will vary by model.

Dishwasher interior components

20 Interior light *
21 Third rack
22 Upper rack
23 Upper spray arm
24 Detergent tab tray
25 Vent hole
26 Zeolite outlet cover (zeolite container)
27 Lower spray arm
28 Dispenser for special salt *
29 Filters
30 Silverware basket *
31 Lower rack
32 Rinse aid dispenser
33 Detergent dispenser
34 Lock for detergent dispenser
35 Rating plate

* optional feature which may or may not be included with your dishwasher.

Display indicators

0:00	Cycle time remaining
Add Rinse Aid	Lights up when rinse aid is low
Clean	Lights up when dishes are clean
Sanitize	Lights up when sanitation requirements are met
Extra dry *	Lights up when intensive drying feature is set
Water Tap *	Lights up when a problem with water supply is detected

* optional feature which may or may not be included with your dishwasher.

Menu overview

The dishwasher has been preset with certain settings for your convenience. You can change these factory settings.

Use the function keys A, B and C to change the settings. See instructions → "*Operating the Dishwasher" on page 34*

Setting	Factory setting	Description
r Rinse aid r:00 - r:06	r:05	Amount of rinse aid affects drying. When using Multitabs, select setting 0.
d Intensive drying* d:00 - d:01	d:00 / Off	Improved drying for glasses and plasticware.
b Cycle completion signal* b:00 - b:03	b:02	Signal sounds when wash cycle is complete.
I Infolight®* I:00 - I:01	I:01 / On	Light is projected to signal an active wash cycle.
P Auto power off P:00 - P:02	P:01	Dishwasher switches off automatically after wash cycle is complete.
S TimeLight®* S:00, S:01	S:01 / On	While a wash cycle is running, status information is projected onto the floor.

* depending on the features of your dishwasher

Rinse Aid

To achieve proper drying, always use a liquid rinse aid, even if your detergent contains a rinse aid or drying additive.

Note: The dishwasher indicates low rinse aid by turning on the Rinse Aid indicator. If this indicator lights up, you need to refill the rinse aid dispenser [32] by following the directions below.

Adding rinse aid

NOTICE

To avoid oversudsing or clogging, do not overfill the rinse aid dispenser [32]. Wipe up any spills with a damp cloth.

1. Open the rinse aid dispenser [32] by pressing on the latch of the lid and pull it open.

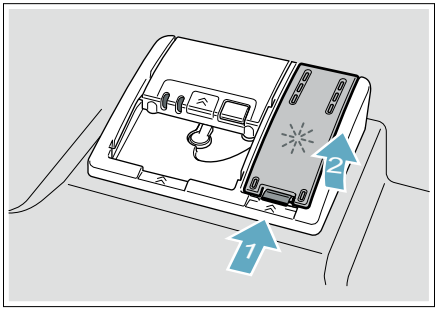

2. Add liquid rinse aid to the dispenser [32] until it is full. Do not overfill. Avoid spilling into air vent hole.

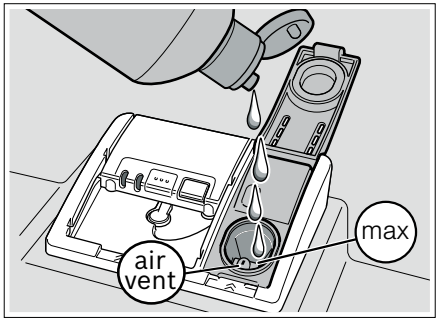

3. Close the lid. Lid must be fully closed until it clicks in order to seal.
4. Wipe up any excess rinse aid that may have puddled when the dispenser reservoir is full.

The indicator light will go out a few moments after the dishwasher door is shut.

Tip: For easier pouring, remove lid from the rinse aid bottle.

NOTICE

Do not fill the rinse aid dispenser [32] with detergent. Doing so will damage the dishwasher.

Setting the amount of rinse aid used

The amount of rinse aid dispensed can be set from r:00 to r:06. The factory setting is r:05.

You should only change the setting if streaks remain on the dishes (lower the amount), or if dishes are not getting dry enough (increase the amount).

Setting	Amount
r:00	dispenser is OFF
r:01	lowest setting
r:02	low setting
r:03	medium setting
r:04	medium/high setting
r:05	high setting
r:06	highest setting

1. Open the door.
2. Press the **On/Off** button [1].
3. Hold down the function key [A] and press the **Start** button [6] until the display [3] indicates d:0x (x can be any number). Release both buttons.
4. Press the function key [A] until the display [3] shows r:05.
5. Press the function key [C] to select the desired setting.
6. Press the **Start** button [6] to save the setting.

Turning off rinse aid indicator

Proceed as described in the section “Setting the amount of rinse aid used” and set value to r:00. The rinse aid indicator is now turned off.

NOTICE

Using no rinse aid or setting the dispenser to r:00 may result in longer cycle times consuming more energy and water. The higher temperatures and longer cycle times can damage fine china or glassware.

Loading the Dishwasher

Dishware material

Note: Before using your dishwasher for the first time, check the information in this section. Some items are not dishwasher-safe and should be hand washed; others require special loading.

Recommended	
Aluminum	Colored anodized aluminum may fade over time. Minerals in your water may cause the aluminum to darken or spot. This can usually be removed with a soap-filled steel wool pad.
China, Crystal, Stoneware	Some hand-painted utensils may discolor, fade or spot. Hand wash these utensils. Position fragile glassware so that it will not topple over or come in contact with other utensils during the wash cycle.
Glass	Make sure to use dishwasher-safe glass. Milk glass may discolor or become yellow.
Non-stick Coatings	Apply a light coating of vegetable oil to non-stick surfaces after drying.
Plastics	Make sure the plasticware is dishwasher-safe.
Stainless Steel, Sterling Silver and Silver Plates	Load these so they do not come in contact with other metals, stainless steel dishwasher tub walls or the inner door.

Not Recommended	
Acrylic	Crazing or small cracks throughout the acrylic, may occur.
Adhesive-Joined Pieces	Adhesives that join materials such as plastic, wood, bone, steel, copper, tin, etc. may loosen.
Bone-Handled Utensils	Handles may separate.
Iron	Iron will rust. Hand wash and dry immediately.
Non-Dishware Items	Your dishwasher is intended for use in cleaning ONLY standard household dishware and kitchenware.
Pewter, Brass, Bronze	These items will tarnish. Hand wash and dry immediately.
Tin	Tin will stain. Hand wash and dry immediately.
Wood	Wooden bowls, wooden utensils and utensils with wooden handles can crack, warp and lose their finish.

Loading the racks

For best dishwashing results, observe the following when loading the dishwasher:

- Do not pre-wash items with loosely attached food soil.
- Remove all food particles, bones, toothpicks and excessive grease.
- Pre-treat items having burned-on, baked-on or starchy soils.
- Load dishes in the dishwasher racks so the insides of bowls, pots and pans are facing the spray arms.
- Avoid nesting and contact points between dishes.
- Separate items of dissimilar metals. Use care to not block movement of the spray arms.
- Only wash household dishware and kitchenware rated as dishwasher-safe.
  Refer to the Dishware Materials section for more information about dishware suitability.

NOTICE

To avoid dishwasher damage, do not load the dishwasher with paper products, plastic bags, packing materials or anything other than normal, dishwasher safe dishware and kitchenware.

Loading the upper rack

Ensure items do not protrude through the bottom of the racks and block the spray arms.

Note: When pushing the upper rack [22] into the dishwasher, push it until it stops against the back of the tub so the upper rack spray arm [23] connects to the water supply at the back of the tub. Do not push racks in using the door.

Loading the lower rack

Place large items in the lower rack [31]. Load pots, pans and bowls upside down. Do not block the vent hole [25] with tall baking sheets. Load these items on the right side of the dishwasher.

Loading patterns for lower rack

12 place setting suggested loading pattern

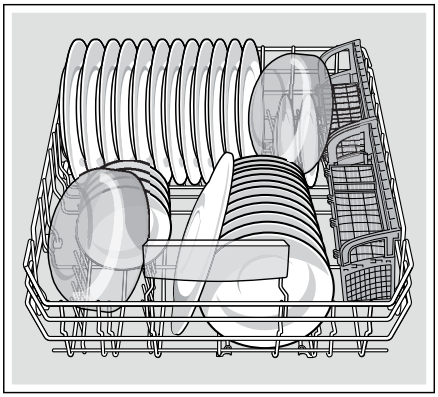

Alternate loading pattern

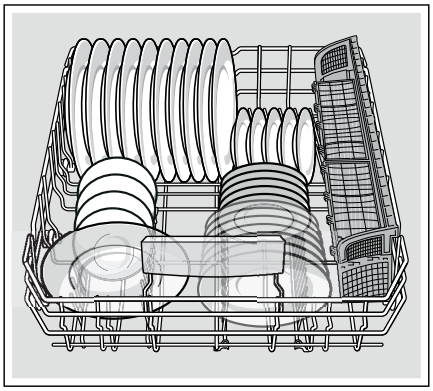

Alternate loading pattern with pots and pans

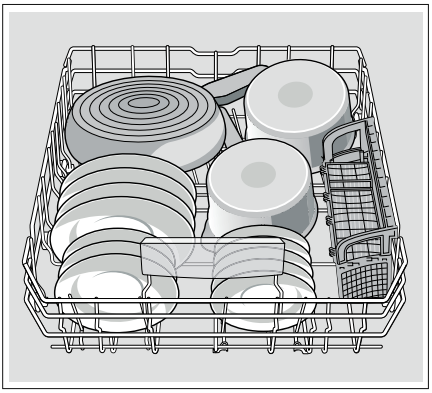

For best results, load large items face down in the lower rack.

Loading patterns for upper rack

12 place setting suggested loading pattern, with third rack cutlery drawer *

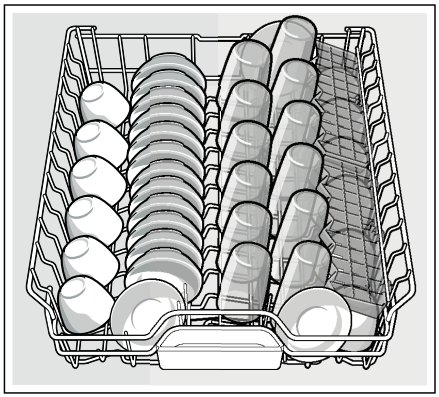

12 place setting suggested loading with My Way Rack™ *

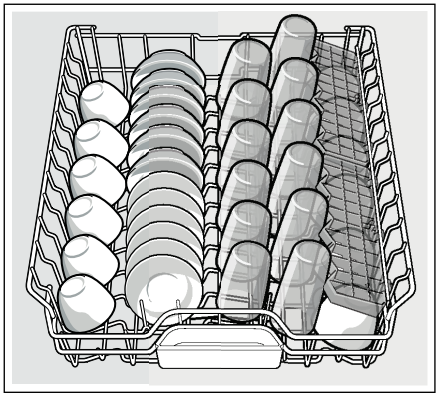

Alternate loading pattern

Alternate loading pattern with stemware

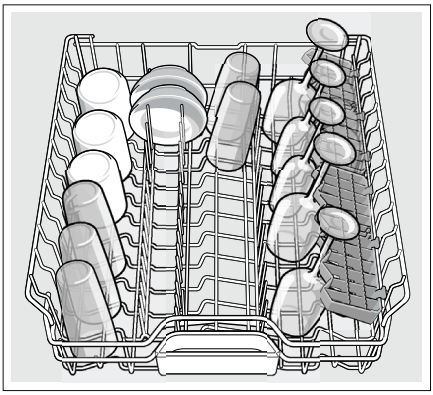

Use supports to load stemware glasses in the upper rack.

* optional feature which may or may not be included with your dishwasher.

Loading patterns for third rack

12 place setting suggested loading pattern *

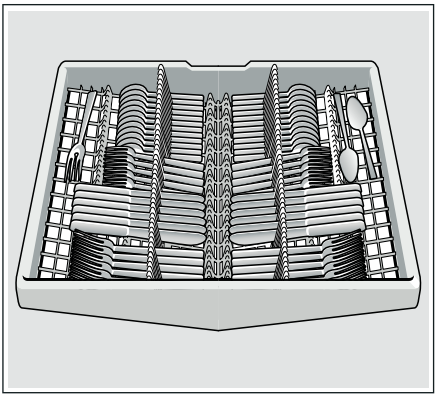

My Way Rack™ *

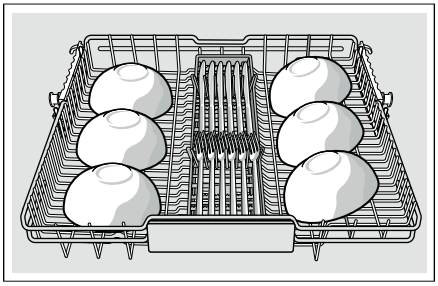

* optional feature which may or may not be included with your dishwasher.

Loading the silverware basket

Place knives and sharp utensils with their handles up and forks and spoons with their handles down. If large or oddly-shaped items are loaded in the silverware basket, be sure they do not nest together.

⚠ WARNING

RISK OF INJURY!
The sharp points and edges of knives and other sharp utensils can cause serious injury. Load knives and other sharp utensils with edges down. Do not allow children to handle or play near knives and sharp utensils.

Silverware basket *

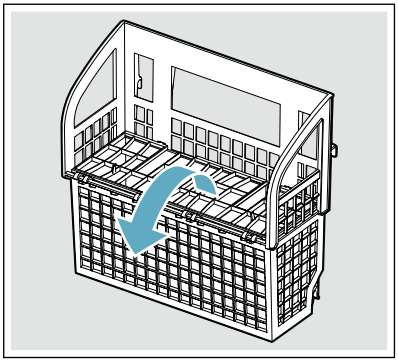

Note: The silverware basket lid may also be folded downward in order to leave the basket open.

* optional feature which may or may not be included with your dishwasher.

The Double Flex silverware basket *

This basket splits along its length, resulting in two halves that may be placed in a variety of positions in the lower rack [31], greatly increasing the lower rack's loading versatility. The basket snaps together either side by side or back to back.

To split the Double Flex silverware basket:
Grasp the basket and slide the two halves in opposite directions and then pull the two halves apart.

Side by side

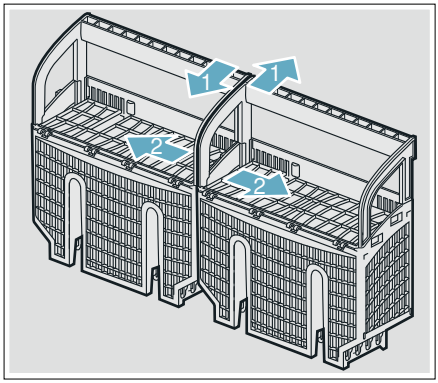

Back to back

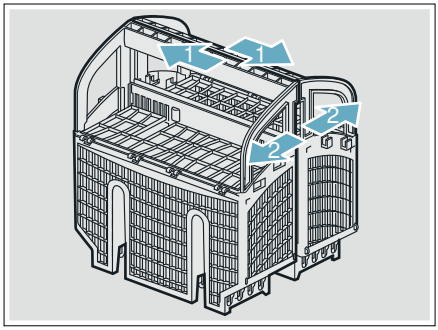

To assemble the Double Flex silverware basket:
Hold the two halves side by side or back to back, so that the tab on one basket can slip into the notch on the other basket. Push the two halves in opposite directions until they click.

Note: The silverware basket lid may also be folded downward in order to leave the basket open.

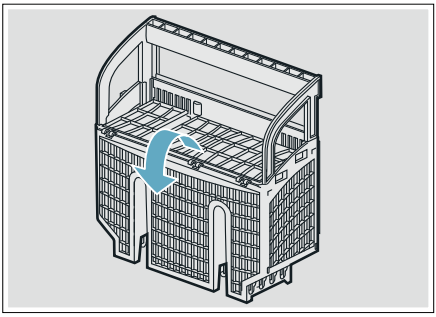

* optional feature which may or may not be included with your dishwasher.

Suggested loading patterns

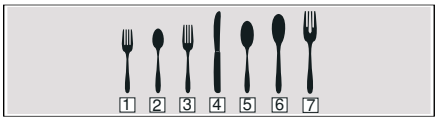

1 Salad fork
2 Teaspoon
3 Dinner fork
4 Knife
5 Tablespoon
6 Serving spoon
7 Serving fork

Silverware basket

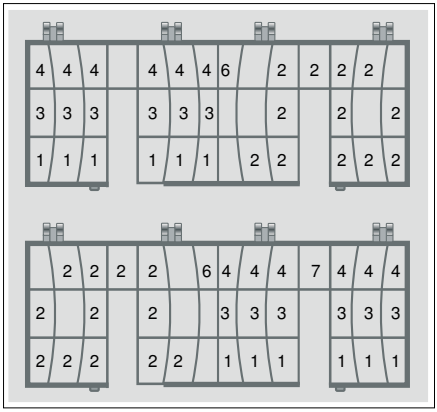

Double Flex silverware basket

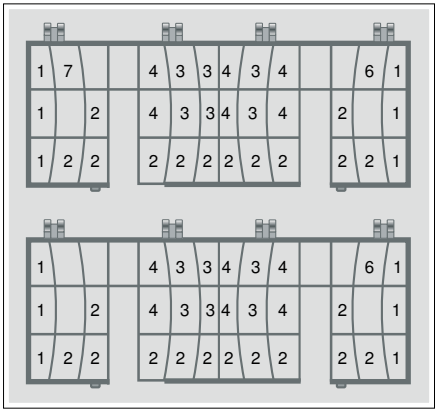

Unloading the dishwasher

⚠ CAUTION

Dishes can be very hot immediately after cycle ends. Open the door slightly and allow dishes to cool for a few minutes before unloading.

Note: Dishes are more likely to chip when unloading before cooling.

When unloading the dishwasher, to prevent water from dripping onto dry dishes, unload the lower rack [31] first. Next, unload the silverware basket [30] followed by the upper rack [22], and then the third rack (if equipped).

Adjusting the height of the rack

If desired, the height of the upper rack [22] can be adjusted to create more space for taller utensils either in the upper or lower rack.

With silverware basket	Upper rack	Lower rack
Setting 1 max. ø	9.4 in (24 cm)	12.6 in (32 cm)
Setting 2 max. ø	10.4 in (26.5 cm)	11.8 in (30 cm)
Setting 3 max. ø	11.4 in (29 cm)	10.6 in (27 cm)

With third rack	Upper rack	Lower rack
Setting 1 max. ø	7 in (18 cm)	12.6 in (32 cm)
Setting 2 max. ø	8 in (20.5 cm)	11.8 in (30 cm)
Setting 3 max. ø	9 in (23 cm)	10.6 in (27 cm)

Arrange large plates up to a diameter of 12.6 in (32 cm) in the lower basket [31] as illustrated.

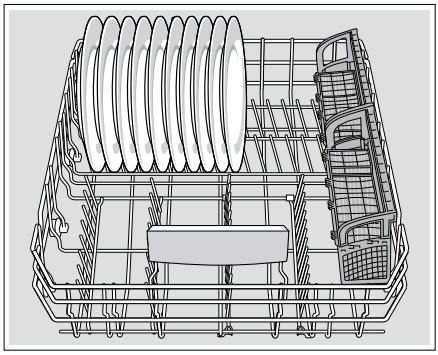

RackMatic®

The height of the upper rack [22] can be adjusted in 3 steps to create more space.

1. Pull the upper rack out of the dishwasher until it stops.
2. To lower the rack, push the RackMatic® lever inward.
3. To raise the rack, hold the basket on the sides of the upper rack and lift it up.

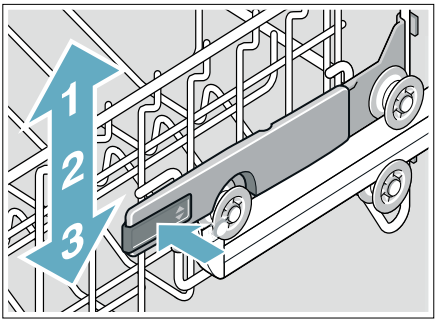

Note: Check spray arm for clearance after adjustment.

Rack accessories

Flip tines

The upper and lower rack are fitted with flip tines that can be folded down depending on what you may need to load in the rack.

Lower rack flip tines: To fold down, pull flip tine gently forward and release it from the notch. Push the flip tine downward. To fold up, push flip tines into an upright position until the holder engages in the notch.

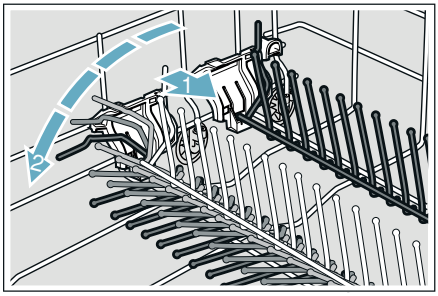

Upper rack flip tines: To fold down, push flip tines downward with gentle pressure. To fold up, push flip tines into an upright position until the holder engages in the notch.

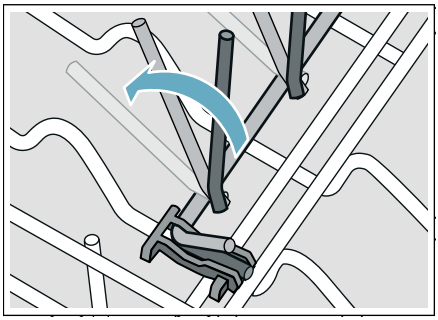

Third rack

The third rack 21 horizontally positions knives, spatulas and other oversized tools for improved cleaning and easier loading and unloading. Arrange cutlery in third rack as illustrated.

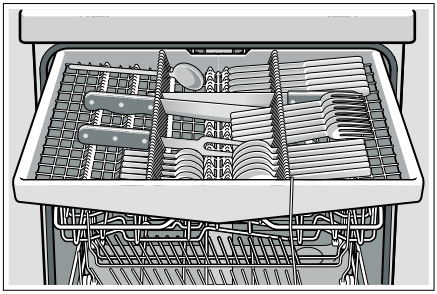

You can fold down the side shelves to provide more room for taller items of silverware.* The front rows of prongs can be folded down to provide room for wider handles.

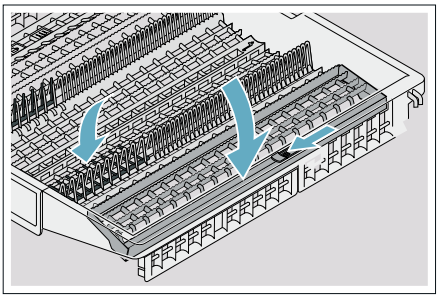

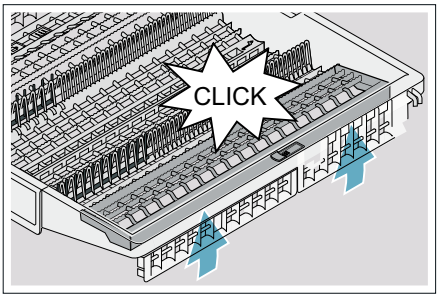

* optional feature which may or may not be included with your dishwasher.

My Way Rack™ *

This third rack is ideal for small bowls, spatulas and other oversized tools for improved cleaning and easier loading and unloading. Arrange cutlery in cutlery insert.

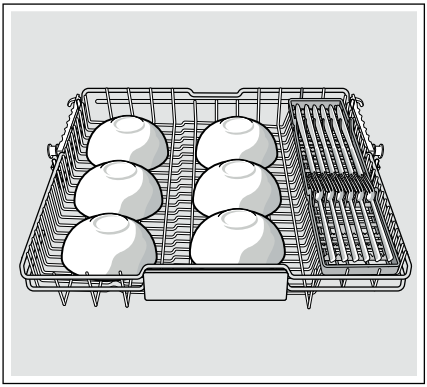

* optional feature which may or may not be included with your dishwasher.

Cup shelves

The cup shelves and the space underneath them can be used for small cups or for larger serving utensils. They also serve as stemware supports.⟶ *"Loading patterns for upper rack" on page 17*

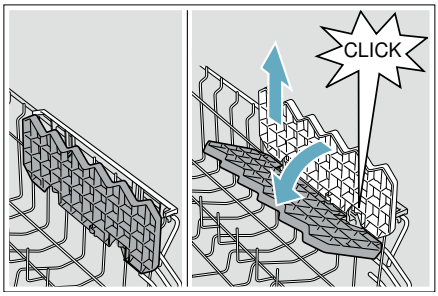

Extra tall item sprinkler*

If an item is too tall to be placed in the lower rack 31 even with the upper rack 22 in the raised position, remove the empty upper rack 22 by pulling it out of the dishwasher until it stops. Pull the front of the rack upward and outward until the rack will not slide out anymore. Then lift it up and away from the dishwasher, until the rollers are completely free of the roller guides **(A)**.

Set the upper rack 22 aside and push the roller guides **(A)** back into the dishwasher. Insert the extra tall item sprinkler **(B)** into the upper rack spray outlet **(C)** and turn the sprinkler clockwise to lock into position.

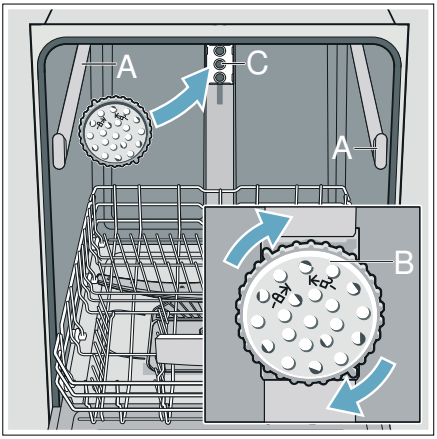

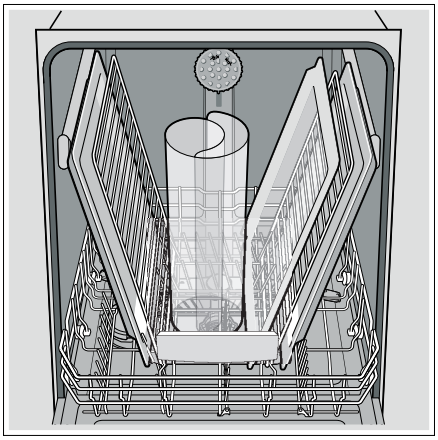

Note: Keep the vent hole [25] on the tub's left side clear by placing tall items such as plastic cutting boards and tall baking sheets on the lower rack's right side or center.

NOTICE

To avoid dishwasher damage, do not reinstall the upper rack [22] without removing the extra tall item sprinkler **(B)**.

* optional feature which may or may not be included with your dishwasher.

Removing/Installing third rack

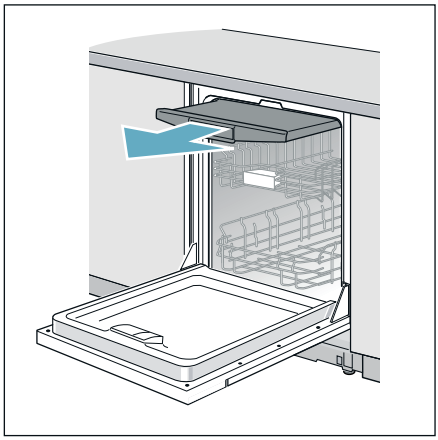

Removing third rack [21]

1. Pull out third rack all the way (1).
2. Lift upper rollers over the stopper hooks of both rails (2).
3. Pull third rack out forward and upward so that the holding hooks and the lower rollers of the rack slide over the stopper hooks of both rails (3).

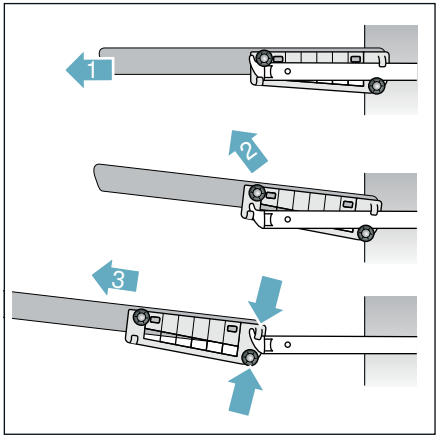

Installing third rack 21

1. Pull out third rack rails all the way (1).
2. Insert third rack at an angle. Make sure that the stopper hooks of both rails slide in between the holding hooks and the lower rollers of the third rack (2).
3. Slide third rack in and lift the upper rollers over the front stopper hooks of both rails (3).
4. Push in third rack (4).

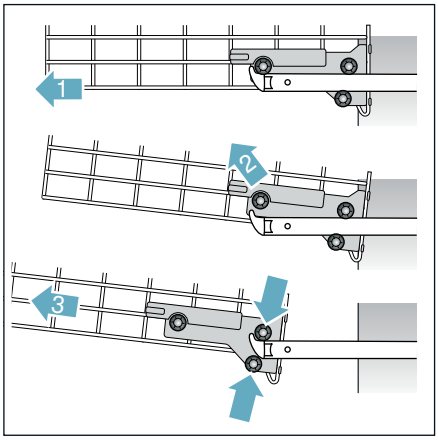

Removing/Installing upper rack with Rackmatic®

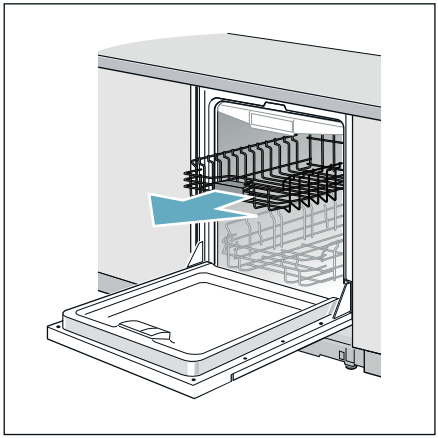

Removing upper rack 22

1. Pull out upper rack all the way (1).
2. Lift front rollers over the stopper hook of the rail (2).
3. Pull out upper rack forwards and upwards so that the upper and lower rollers of the rack slide over the stopper hooks of both rails (3).

Installing upper rack 22

1. Pull out upper rack rails all the way (1).
2. Insert upper rack at an angle. Make sure that the stopper hooks of both rails slide in between the upper and lower rollers on the rear side of the rack (2).
3. Slide upper rack in and lift the upper rollers over the front stopper hooks of both rails (3).
4. Push in upper rack (4).

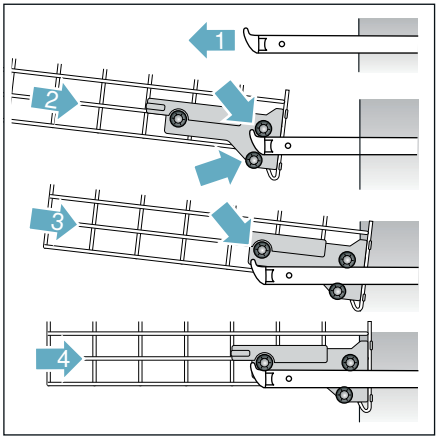

Detergent

Use only detergent specifically designed for dishwashers. For best results, use fresh powdered dishwashing detergent or detergent tabs.

NOTICE

To avoid damage to dishwasher or dishware:

- Do not use hand dishwashing products in your dishwasher.
- Do not use too much detergent if your water is soft. Using too much detergent with soft water may cause etching in glassware and fine china.
- To best protect glassware, use a wash cycle with low temperatures or a specific glass-care cycle (depending on the model) and use a detergent that includes etch protection.

This dishwasher uses less water than most, therefore, less detergent is required. With soft water, 1 tablespoon (15 ml) of detergent will clean most loads. The detergent dispenser cup has lines that measure detergent to 1 tablespoon (15 ml) and 1.75 tablespoons (25 ml). 3 tablespoons (45 ml) of detergent will completely fill the detergent dispenser.

Note: If you do not know the hardness of your water supply, use 15 ml of detergent. Increase the amount if necessary to the least amount required to get your kitchenware clean.

Use the measuring lines in the detergent dispenser cup as a guide to measure the amount of detergent recommended in the following table.

Wash Cycle	Hard Water/ Heavy Soil	Medium Water/ Medium Soil	Soft Water/ Little Soil
Heavy	3 tbsp (45 ml)	3 tbsp (45 ml)	1.75 - 3 tbsp (25 - 45 ml)
Auto	1.75 - 3 tbsp (25 - 45 ml)	1.75 tbsp (25 ml)	1 - 1.75 tbsp (15 - 25 ml)
Glass	1.75 - 3 tbsp (25 - 45 ml)	1 - 1.75 tbsp (15 - 25 ml)	1 tbsp (15 ml)
Eco	1.75 - 3 tbsp (25 - 45 ml)	1 - 1.75 tbsp (15 - 25 ml)	1 tbsp (15 ml)
Normal	1.75 - 3 tbsp (25 - 45 ml)	1.75 tbsp (25 ml)	1 - 1.75 tbsp (15 - 25 ml)
Speed60®	1.75 tbsp (25 ml)	1 - 1.75 tbsp (15 - 25 ml)	1 tbsp (15 ml)
Express	1.75 tbsp (25 ml)	1 - 1.75 tbsp (15 - 25 ml)	1 tbsp (15 ml)
Rinse	none	none	none

Adding detergent

1. If the detergent dispenser [33] is still closed, push the button [34] to open it.

   Note: Make sure the detergent dispenser is dry and clear of detergent residue.

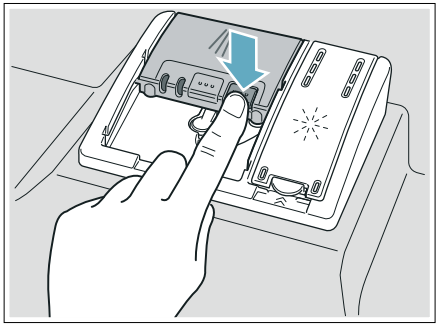

2. When using detergent tabs, lay them such that they do not come in contact with the cover, insert a detergent tab flat, not on its side.

   Note: Do not place detergent tabs or utensils in the detergent tab tray [24]. Place tabs or other detergent forms directly in the detergent dispenser [33].

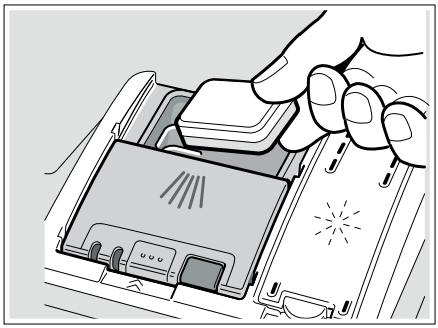

   Pour detergent into the dry detergent dispenser [33] only. Add detergent. Do not overfill the detergent dispenser.

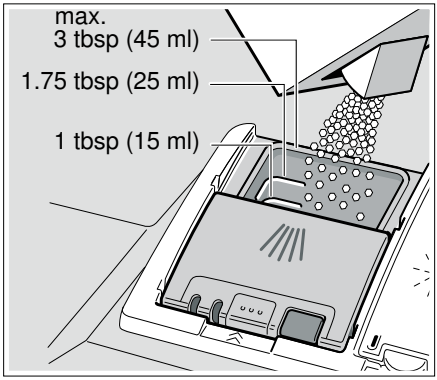

   Dosage: see manufacturer's instructions on the packaging.

3. Close the lid by placing the finger on the lid as shown. Slide the lid closed until it clicks.

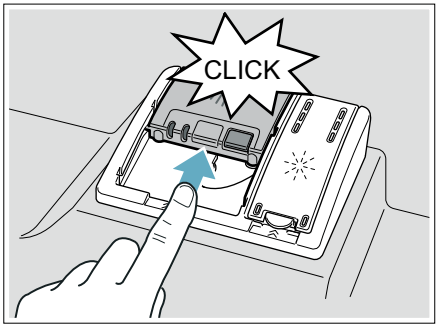

   The detergent dispenser will open automatically at the ideal time for the set cycle. The powder or liquid detergent is distributed in the appliance and is dissolved, detergent tabs will fall into the detergent tab tray [24] where it dissolves during the cycle.

Tip: If the dishware is only lightly soiled, slightly less than the indicated amount of detergent is usually adequate.

Dishwasher Cycles

Wash cycle	Recommended use	Possible wash cycle option
Heavy	Best for cleaning items with baked-on food or grease. These dishes would normally require soaking or hand scouring.	all
Auto	Smartest cycle, with most flexible soil sensing, which is ideal for mixed dishware and food soils.	all
Eco*	The Eco cycle uses less energy with lower temperatures and a shorter cycle length . Perfect for lightly soiled dishes.	all
Glass*	Best for delicate dishes and glasses, the Glass cycle lowers temperature and cycle length to decrease energy usage.	**Delay** **Half Load** **CrystalDry™**
Normal (see note at bottom of table)	Recommended for daily, regular or typical use to completely wash a full load of normally soiled dishes.	all **Note:** In order to obtain optimal performance with minimum energy consumption, it is recommended to disable all available options and settings, except **Auto Power Off** - set to P:01
Speed60®	Cleans freshly soiled dishes with easy to remove soils. This cycle reduces cycle time while still including drying.	**Delay**
Express	Cleans lightly soiled dishes and reduces overall wash time. Use this cycle to clean glasses and dessert dishware that may need to be reused at the same event.	**Delay**
Rinse	Use this cycle if you need to rinse dishes to avoid odors. Place unrinsed dishes inside the dishwasher and select the **Rinse** cycle. Uses less water than hand rinsing and very low energy.	**Delay**

*the number of wash cycles and options depends on the features of your dishwasher

Note: The Energy Guide label was based on the **Normal** soil sensing cycle as follows: The unit was tested without any rinse aid (liquid) in the rinse aid dispenser [32]. A single dose of detergent was inserted into the detergent dispenser [33], with no detergent being used in the prewash. The unit was not subjected to truncated testing per the definitions in the test procedure. We recommend that dish loads such as the one in the energy certification test have the rack position set in the highest position.

P+ Dishwasher Cycle Options

Delay

Allows you to delay the start time of your dishwasher up to 24 hours.

Half Load

Can reduce water consumption when washing small, lightly soiled loads that fill approximately half or less of the dishwasher's capacity.

Delicate

This option's reduced time and temperature are best for lightly soiled items with easy to remove food soils. The option also reduces the likelihood of cloudy glasses. Rinse aid is recommended for the high gloss drying function (even when using combination detergents).

Sanitize

Increases the temperatures and retains them for an extra long time to obtain a defined disinfecting performance. Continuous use of this function increases the hygiene status. This additional option is ideal for cleaning items such as chopping boards and baby bottles.

"Sanitized" will appear in the display window when sanitation requirements are met. Using the Sanitize option may also improve drying. There is a slight increase in energy consumption.

CrystalDry™

Patented CrystalDry™ technology thoroughly dries dishes and plastics such as baby bottles and food storage containers. Natural minerals transform moisture into heat up to 176F to get dishes, even plastics 60% drier.*

* Based on aggregate average drying performance of Bosch Dishwashers with CrystalDry™ on combined household load including plastics, glass, steel, and porcelain as compared to Bosch Dishwashers with PureDry. Drying performance may vary by dish type.

Eco *

The "Eco" function can be used to reduce water and energy consumption. The running time is extended for optimum cleaning and drying results.

ExtraScrub® *

This option increases pressure and temperature in the lower rack for intensive cleaning.

Wash Cycle Information

To save energy, this dishwasher has EcoSense where the sensors in the dishwasher automatically adjust the cycle length, temperature and water changes based on the amount of food soil and the incoming water temperature. The “Smart Control” makes decisions that can cause the cycle time and water usage to adjust intermittently. **Wash cycle times are based on 120°F (49° C) water supply.** If your household water supply is different than 120°F (49° C), your dishwasher’s cycle times may be impacted.

	Heavy	Auto	Glass	Normal	Eco	Speed60®	Express	Rinse
Cycle time min.	110-135	105-129	75-85	130-135	75-85	60	30	9
Water usage gal/L	4.9-6.4/ 18.6-24.2	3.4-6.4/ 12.9-24.1	2.4-3.9/ 9.0-14.6	2.3-5.5/ 8.8-21	2.4-3.9/ 18.6-24.6	3.8/ 14.3	2.8/ 10.5	1.1/ 4.1
Wash temp. °F/°C	151-160/ 66-71	127-140/ 53-60	113-122/ 45-50	113-131 / 45-58	113-122/ 45-50	122/ 50	113/ 45	incom-ing
Rinse temp. °F/°C	151/ 66	136/ 58	122/ 50	136/ 58	122/ 50	158/ 70	124/ 51	incom-ing
Half Load								
Cycle time min.	114	95-105	70-80	100-105	70-80	N/A	N/A	N/A
Water usage gal/L	4.7/ 17.9	2.7-4.4/ 10.2-16.5	2.4-3.3/ 9.2-14.5	2.9-3.7/ 10.8-13.9	2.4-3.3/ 9.2-14.5	N/A	N/A	N/A
Rinse temp. °F/°C	151/ 66	136/ 58	122/ 50	136/ 58	145/ 63	N/A	N/A	N/A
Delicate								
Cycle time min.	105-120	100-110	N/A	100-120	N/A	N/A	N/A	N/A
Water usage gal/L	4.9-6.4/ 18.6-24.2	3.4-6.4/ 12.9-24.1	N/A	2.3-5.5/ 8.8-21.0	N/A	N/A	N/A	N/A
Rinse temp. °F/°C	140/ 60	122/ 50	N/A	122/ 50	N/A	N/A	N/A	N/A

	Heavy	Auto	Glass	Normal	Eco	Speed60 ®	Express	Rinse
Sanitize								
Cycle time min.	125-150	125-150	N/A	150-155	N/A	N/A	N/A	N/A
Water usage gal/L	4.9-6.4/ 18.6-24.2	3.4-6.4/ 12.9-24.1	N/A	2.3-5.5/ 8.8-21	N/A	N/A	N/A	N/A
Rinse temp. °F/°C	162/ 72	162/ 72	N/A	162/ 72	N/A	N/A	N/A	N/A
Extra Scrub								
Cycle time min.	125-150	120-145	90-100	145-150	90-100	N/A	N/A	N/A
Water usage gal/L	4.9-6.4/ 18.6-24.2	3.5-6.4/ 13.13-24. 1	2.4- 3.9/ 9.3-14.5	2.3-5.5/ 8.8-21.0	2.4- 3.9/ 9.3-14.5	N/A	N/A	N/A
Rinse temp. °F/°C	151/ 66	136/ 58	122/ 50	136/ 58	122/ 50	N/A	N/A	N/A
CrystalDry™								
Cycle time min.	140-165	135-159	105-115	160-165	105-115	N/A	N/A	N/A
Water usage gal/L	4.9-6.4/ 18.6-24.2	3.4-6.4/ 12.9-24.1	2.4-3.9/ 9.0-14.6	2.4-5.5/ 8.8-21	2.4-3.9/ 9.0-14.6	N/A	N/A	N/A
Rinse temp. °F/°C	153/ 67	153/ 67	135/ 57	153/ 67	135/ 57	N/A	N/A	N/A
Eco								
Cycle time min.	105-130	100-110	75-80	110-120	75-80	N/A	N/A	N/A
Water usage gal/L	4.9-6.4/ 18.6-24.2	3.4-6.4 12.9-24.1	2.4-4.4/ 9.0-16.6	2.3-5.5/ 8.8-21.0	2.4-4.4/ 9.0-16.6	N/A	N/A	N/A
Rinse temp. °F/°C	122/ 50	129/ 54	122/ 50	129/ 54	122/ 50	N/A	N/A	N/A

Note: Only sanitizing cycles have been designed to meet the requirements of Section 6 of the NSF/ANSI Standard for Residential Equipment for soil removal and sanitization efficacy. There is no intention, either directly or indirectly, to imply that all cycles have passed sanitization performance tests.

Operating the Dishwasher

Note: With hidden controls, the door must be opened before changing settings and closed after changing settings.

WARNING

RISK OF INJURY!
To avoid risk of injury, always use caution when opening the door during or following a wash cycle as hot water or steam may escape. Do not fully open the door until water noises have stopped and steam has subsided.

Protection against unintentional operation

Your dishwasher is equipped with a function that helps to prevent unintentional operation (e.g. by children).

After starting the dishwasher, the dishwasher door has to be closed within 4 seconds, otherwise the operation will be paused. There will be a signal on the control panel advising you to press the Start button again and close the door.

This function will be activated when:
- pressing Start to begin a wash cycle
- setting Delay time and pressing Start
- opening the door while Delay time is active
- opening the door during a wash cycle.

Note: This function cannot be deactivated.

AquaSensor

The AquaSensor is an optical measuring device which measures the cleanliness of the rinse water.

The AquaSensor is used according to the wash cycle. If the AquaSensor is active, “clean” rinse water can be transferred to the next rinse and water consumption can be reduced by 0.8–1-5 gal (3–6 liters). If the rinse water is not yet clear, the water is drained and is replaced with fresh water. In the automatic wash cycles the temperature and running time can also be adjusted to the degree of soiling.

Switching the appliance on

1. Turn the water supply on fully.
2. Open the door.
3. Press the **On/Off** button [1]. The display of the last selected wash cycle flashes. This wash cycle remains selected if no other wash cycle button [2] is pressed. The expected wash cycle duration flashes on the display [3]. Select any desired option.
4. Press **Start** button [6].

Wash cycle sequence starts.

Note: Your dishwasher is protected against unintentional operation. If the appliance door remains open for more than 4 seconds after pressing the Start button, the operation will be paused. Press the Start button again and close the appliance door.

Time display

When a wash cycle is selected the remaining wash cycle time is shown on the display [3].

The wash cycle time is determined during the wash cycle by the water temperature, the amount of dishes, as well as the degree of soiling and may vary (depending on the selected wash cycle).

Delay Start

You can delay the start of the cycle in one hour increments up to 24 hours.

h:01	1 hour delay
h:24	24 hours delay

To set Delay start:

1. Open the door and press the **On/Off** button [1]. Select a cycle.
2. Press the **Delay** button from the wash cycle options [5] until the displayed time corresponds with your requirements.
3. Press the **Start** button [6] to activate Delay start.

To cancel Delay start:

1. Open the door and press the **Delay** button until h:00 is indicated on the digital display [3].
2. Press the **Start** button [6] to save setting.

Note: Your dishwasher is protected against unintentional operation. If the appliance door remains open for more than 4 seconds after pressing the Start button, the operation will be paused. Press the Start button again and close the appliance door.

Wash cycle end

The wash cycle has ended when the display [3] reads 0:00.

If the signal tone has been set, the wash cylce end is also indicated by a buzzer.

b:00	Off
b:01	low
b:02	medium
b:03	loud

To change the signal volume:

1. Open the door.
2. Press the **On/Off** button [1].
3. Hold down function key [A] and press **Start** button [6] until the display [3] indicates d:0x (x can be any number). Release both buttons.
4. Press function key [A] until the display shows b:02.
5. Press function key [C]. Each time the button is pressed the set value increases by one level; when it reaches the value b:03, the display jumps back to b:00 (off).
6. Press **Start** button [6] to save the setting.

Auto power off

This setting determines the length of time the control panel stays illuminated after the cycle is complete. To save energy the recommended setting is P:01.

This setting can be adjusted from P:00 to P:02.

P:00	dishwasher does not turn off automatically
P:01	dishwasher turns off automatically after 1 minute
P:02	dishwasher turns off automatically after 120 minutes (2 hours)

To change the setting:

1. Press the **On/Off** button [1].
2. Hold down the function key [A] and press the **Start** button [6] until the display [3] indicates d:0x (x can be any number).
3. Release both buttons.
4. Press the function key [A] until the display [3] indicates P:0x.
5. Press the function key [C] until the display corresponds with your requirements.
6. Press the **Start** button [6].

Switching off the appliance

Short time after the end of the wash cycle:

1. Press **On/Off** button [1].
2. Remove the dishes when they have cooled down.

⚠ WARNING

RISK OF INJURY!
To avoid risk of injury, always use caution when opening the door during or following a wash cycle as hot water or steam may escape. Do not fully open the door until water noises have stopped and steam has subsided.

Interrupting the wash cycle

⚠ CAUTION

Expansion (overpressure) may cause the appliance door to open and/or water to escape! If the door was opened on an appliance which has a hot water connection or is heated, always leave the door ajar for several minutes and then close.

1. Open the door.
2. Switch off On/Off switch [1]. The LED's go out. The wash cycle is saved.
3. To continue the wash cycle, switch on the On/Off switch [1] again.
4. Close the door.

Note: Your dishwasher is protected against unintentional operation. If the appliance door remains open for more than 4 seconds after pressing the Start button, the operation will be paused. Press the Start button again and close the appliance door.

Terminating the wash cycle (Reset)

1. Press and hold **Start** button [6] for approximately 3 seconds until the display reads 0:01.
2. Wait about 1 minute while the dishwasher drains.
3. Press **On/Off** button [1].

You may now power the dishwasher back on and begin a new cycle if desired.

Changing the wash cycle

When the **Start** button [1] has been pressed, the wash cycle cannot be changed. The only way a wash cycle can be changed is by terminating the wash cycle (Reset).

InfoLight® *

While the wash cycle is running, a light spot shines on the floor under the appliance door.
Do not open the appliance door until the light point is no longer visible on the floor.
If the appliance door is not completely closed, the light spot flashes*.
If the appliance is installed at eye-level, with flush furniture front, the light point is not visible.
In darkened rooms, some light scattering may be visible. This is normal and cannot be changed.

You can switch the Infolight on or off.

1:00	Off
1:01	On

To change the setting:

1. Open the door.
2. Press the **On/Off** button [1].
3. Hold down function key [A] and press **Start** button [6] until the display [3] indicates d:0x (x can be any number). Release both buttons.
4. Press function key [A] until the display shows 1:01.
5. Press the function key [C] to switch the InfoLight® feature on 1:01 or off 1:00.
6. Press **Start** button [6] to save the setting.

* optional feature which may or may not be included with your dishwasher.

TimeLight® (Optical display while the wash cycle is running) *

While wash cycle is running, an optical display (time remaining alternating with cycle indicator images) is projected onto the floor under the appliance door.

You can switch the optical display on 5:01 or off 5:00.

All time remaining displays

BOSCH	Bosch® logo
	Pre-rinse
	Cleaning
	Rinsing
	Drying
	Cycle end

To change the setting:

1. Open the door.
2. Press **On/Off** button 1.
3. Hold down function key A and press **Start** button 6 until the display 3 shows H:0x or d:0x (x can be any number).
4. Release both buttons.
   The light above function key A flashes and the display 3 shows the factory set value.
5. Press function key A until the display 3 shows the factory set value 5:01.
6. Press function key C to switch between 5:00 and 5:01.
7. Press **Start** button 6 to save setting.

* optional feature which may or may not be included with your dishwasher.

Intensive drying

The final rinse uses a higher temperature which improves the drying result. The cycle time may increase slightly. (Caution if utensils are delicate!)

This feature has two settings:

d:00 Off
d:01 On

1. Open the door.
2. Press the **On/Off** button 1.
3. Hold down function key A and press **Start** button 6 until the display 3 indicates d:x (x can be any number).
4. Release both buttons.
5. Press function key A until the display 3 indicates the factory set value d:00.
6. Press function key C to switch the Extra dry feature on d:01 or off d:00.
7. Press **Start** button 6 to save setting.

Care and Maintenance

A regular inspection and maintenance of your machine will help to prevent faults. This saves time and prevents future problems.

Cleaning the dishwasher

- Regularly wipe the front of the appliance with a damp cloth - water and a small amount of liquid soap is adequate.
- For black stainless steel and anti-fingerprint surfaces, use a soft, dry towel. For stubborn dirt, use warm water diluted with a non-abrasive, mild cleansing soap. Never use stainless steel polish.
- For stainless steel appliances (excluding black stainless and anti-fingerprint), use a stainless steel polish to seal and protect the surface.
- Clean the outer edges of the inside door panel regularly to remove debris that may collect from normal loading. If spots begin to appear on the stainless steel, make sure the rinse aid dispenser is full and functioning properly.
- Clean the door seal regularly with a damp cloth to remove food particles that may collect from normal loading and cause odor. A soiled door seal may not seal properly.

NOTICE

- Never use a steam cleaner to clean your dishwasher. The manufacturer is not liable for any resulting damage.
- Do not use sponges as they could scratch the surfaces.
- Do not use bleach-based wipes as they could damage the surface or printing.
- Never use stainless steel polish on a black stainless finish or anti-fingerprint surfaces.

WARNING

RISK OF EXPLOSION!

- When cleaning your dishwasher with any cleaning agent, remove all cookware, utensils or any foreign material from inside. Some cleaning agents are highly acidic and/or caustic alkaline, which can cause hydrogen gas to form if aluminum material is also inside the dishwasher tub. Hydrogen gas is explosive.

WARNING

Use caution when removing parts for cleaning as some debris may be sharp.

Filters

The Bosch® filter system 29 is designed to prevent the need to pre-rinse normally attached food soils from your dishes. Simply scrape leftover food soils off of dishware before loading. This process will conserve time, water and the energy require to heat your household water supply.

Your dishwasher filter system is designed to filter 100% of the water entering the spray arms to provide a continuous supply of clean water to remove food soils from your dishware.

Filter components

The filter system 29 consists of three parts.

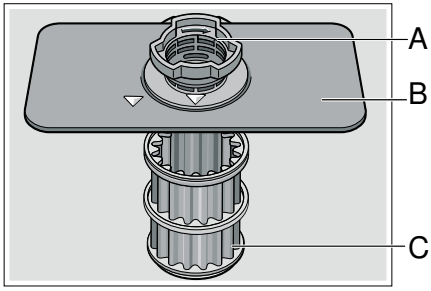

A **Large Object Trap**
Prevents objects that should not be placed in your dishwasher from damaging the dishwasher pump system or clogging your household drain.

B **Flat Fine Filter**
Prevents food particles from entering the wash chamber and directs particles toward the micro filter.

C **Micro Filter**
Directs the smallest of particles to the household plumbing drain.

Cleaning intervals

The filter system 29 is designed to minimize maintenance while providing premium cleaning performance and minimum energy consumption.

Depending on use habits and water hardness, the filter system will require some maintenance to sustain premium cleaning performance.

Your filter system may need to be cleaned when:

- You notice food soils remaining on the filter system or objects trapped in the Large Object Trap.
- A drop in cleaning performance or a gritty film forms on the dishware.

When washing normally attached food soils that have been scraped before loading, in a household that runs the dishwasher every other day, your filter should be cleaned:

Cleaning interval	Use this setting,
3 times a year	if you rinse before loading
4 times a year	if you only scrape before loading
6 times a year	if you do not rinse or scrape before loading
12 times a year	if you have hard water

Note: Clean the filter after washing loads with large amounts of food soils or loads with a heavy starch content, like potatoes and pasta, to maintain optimal performance.

To check or clean the filter system:

1. Unscrew the Large Object Trap as illustrated and remove the entire filter system.

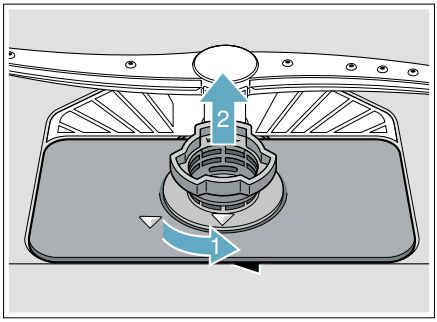

2. Remove the microfilter from the fine filter for easier cleaning.

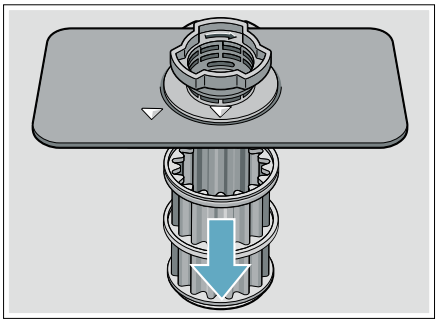

3. Rinse the filters under running water and use a soft brush to clean.

   Note: do not use abrasive brushes or steel wool, etc., as they may damage the filter.

4. Reinstall the filter system in reverse sequence and lock into place by screwing the Large Object Trap until the marking arrows align.

Spray arms

Check spray arms [23], [27] for grease and limescale deposits. If you find such deposits:

- Fill detergent dispenser [33] with detergent and start the appliance without utensils in the cycle with the highest rinsing temperature. ⟶ *"Wash Cycle Information" on page 31*
- Clean the appliance with detergents/appliance cleaners which are particularly suitable for use with dishwashers.
- Unscrew the upper spray arm [23] and pull off the lower spray [27] arm as shown. Inspect for deposits.

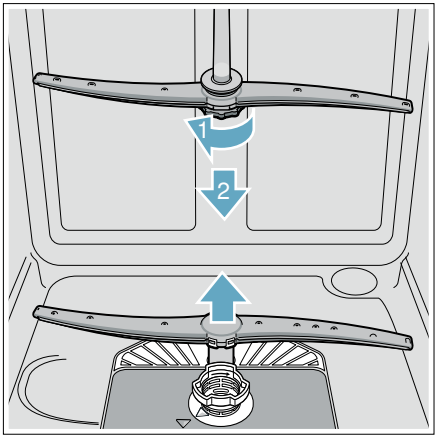

Drain pump

Large food remnants in the rinsing water not retained by the filters may block the waste water pump. In this case:

- Disconnect the appliance from the power supply.
- Remove the filters. ⟶ *"Filters" on page 40*
- Scoop out standing water - use a sponge if necessary.
- Using a spoon, pry off the pump cover until it clicks, then grip the cover and pull upward until it resists and then pull forward.

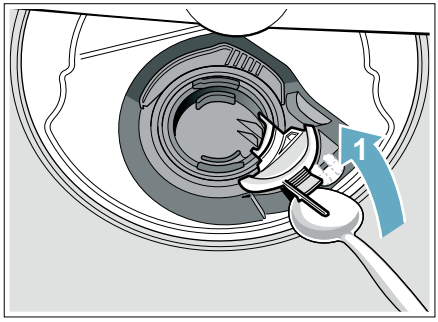

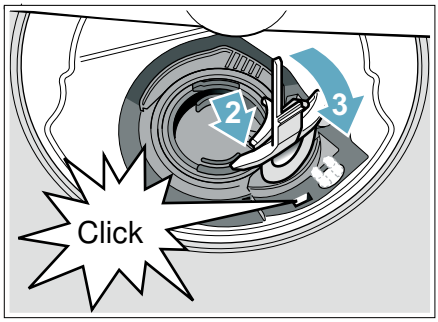

- Check inner compartment and remove any foreign objects.

⚠ WARNING

Use caution when removing parts for cleaning as some debris may be sharp.

- Place cover in the original position, press down and engage.
- Reinstall filters.

Note: The drain pump will not work properly if the drain pump cover is not snapped in completely until it clicks.

Preparing your unit for vacation

NOTICE

Before leaving for vacation during warmer weather, besides turning off the main valve, also turn off water supply at the nearest point to the dishwasher. Do not leave soiled dishware in unit and leave door slightly open. During colder weather, please follow the instructions for winterizing your unit below.

Winterizing your unit

NOTICE

If your dishwasher will be unused for a period of time in a location that experiences freezing temperatures (holiday home or through a vacation period), have your dishwasher winterized by a professional service.

Troubleshooting

Dishwashers may occasionally exhibit problems that are unrelated to a malfunction of the dishwasher itself.

The following information may help you with a dishwasher problem without involving a repair professional.

Dishwasher does not start.	Door may be ajar or not be properly latched.	Close door securely until door latch clicks.
	No power to the dishwasher (display won't come on). Fuse may have been blown, circuit breaker may have tripped, power cord may have been unplugged or dishwasher may have been turned off.	Replace blown fuse or reset tripped circuit breaker. Plug power cord into outlet securely. Press the on/off button 1 to turn the dishwasher on.
	Can't select a wash cycle since the previous wash cycle may not have finished or the dishwasher hasn't been reset.	Reset the dishwasher by pressing and holding the START button for at least three seconds.
	Delay start or Child lock may be activated.	Reset Delay start or Child lock functions (refer to the appropriate section in this manual). ⟶ *"Delay Start" on page 35*
	The door may have been closed without selecting a wash cycle.	Select a wash cycle and close the door.
	Water supply may not be turned on or connected.	Check and turn on water supply.
Wash cycle won't resume after door was opened and closed.	The door has been open for more than 4 seconds after pressing the **Start** button.	Press **Start** button again and close the dishwasher door within 4 seconds (see "Protection against unintentional operation" section in this manual).
Display does not illuminate.	A fuse may have been blown or circuit breaker tripped.	Check the fuse or circuit breaker box and replace the fuse or reset the breaker if necessary.
	Door not closed or latched. **Note:** For models with controls on top of the door, the display only illuminates when the door is opened and controls are visible.	Ensure door is properly latched and completely closed.

Dishwasher runs a long time.	Incoming water is not warm enough.	Before starting a cycle, run hot water faucet at the sink closest to the dishwasher.
	Cycle time depends on wash cycle chosen and amount of soil on dishes (dishwasher sensors increase cycle times to ensure dishes are clean when heavy soil is detected).	Scrape food off of dishes and use less intensive wash cycles.
	Rinse aid dispenser [32] is empty, or rinse aid setting = 0. Without rinse aid, wash cycle defaults to longest time with most number of washes and rinses.	Add rinse aid and change rinse aid setting depending on water hardness.
	Dishwasher is connected to cold water supply.	Connect dishwasher to hot water supply.
Dishes aren't clean enough	Spray arms are blocked or misaligned where they cannot rotate freely.	Make sure spray arms [23], [27] can rotate freely.
	Little or no water spray due to clogged spray arm nozzle.	Clean out spray arm nozzles and filters of all debris and obstructions. ⟶ *"Spray arms" on page 41*
	Little or no water spray due to clogged or misaligned filters [29].	Clean filters and make sure they're installed correctly. ⟶ *"Filter components" on page 40*
	Dishes are nested or placed too closely together and racks are overfilled.	Space dishes apart so spray jets can reach the surface of the dishes and dishes don't contact each other. ⟶ *"Loading the Dishwasher" on page 15*
	Improper or ineffective wash cycle or detergent used.	Choose a more intensive wash cycle and use appropriate dishwasher detergents. ⟶ *"Wash Cycle Information" on page 31*
	Detergent is made less effective due to hard water.	Install a water softener and choose a more intensive wash cycle.
Removable spots or streaks on glasses and silverware.	Too much rinse aid causes streaks and too little rinse aid can cause spots.	Add rinse aid and check rinse aid setting (recommended setting 4-5). ⟶ *"Rinse Aid" on page 13*
	Mineral deposits from hard water.	Install a water softener.
	Water from top (3rd) or upper rack dripped on racks below.	Unload lower rack 1st, upper rack 2nd and top (3rd) rack last.

Dishes not dry.	Rinse aid dispenser 32 is empty or incorrect rinse aid amount is set.	Add rinse aid or adjust setting - the use of rinse agent improves drying, use the Auto cycle, use the Sanitize option.
	Extra Dry heat option not chosen.*	Activate Extra Dry heat option.*
	Water collected in depressions on the dishes and silverware.	Arrange dishes in upper rack to slope so water can drain.
	Door was opened or dishes removed before wash cycle was completed.	Wait until wash cycle ends before opening door or removing dishes.
	Plastics don't absorb heat like cutlery or china and don't dry as well.	Use more intensive wash cycles (with hotter rinse water) or activate Extra Dry heat option.*
	Silverware not arranged properly in the silverware basket or top rack.	Arrange silverware properly and separate them so they don't contact each other.
Odor **Note:** Water testing is done in the factory. Occasionally water may still appear in dishwasher at purchase which may create an odor.	Food debris in the dishwasher sump and door seal.	Clean sump filters, sump and door seal as needed. ⟶ *"Care and Maintenance" on page 39*
	Food debris left on dishes too long.	Run dishwasher more frequently.
	Not using rinse aid or using improper detergent.	Use rinse aid and the proper detergent.
	Residual standing water in the sump.	Make sure previous wash cycle has finished.
	Drain line is clogged or drain hose is kinked, clogged or blocked. Or drain hose was not installed with a high loop.	Unclog drain line or replace drain hose. Be sure drain hose is installed with high-loop. **Note:** If odor still persists, run the Normal/ Regular cycle until it flushes and interrupt the cycle and place an 8 oz. cup of distilled white vinegar solution on the upper rack and then finish the cycle.
Dishwasher isn't filling with water (or "Check water supply" display occurs)	Water supply hose is kinked.	Install new supply hose (without kinks).
	Previous wash cycle was not completed or current wash cycle was interrupted.	Complete wash cycle or reset dishwasher.
	Delay start or Child lock may be activated.	Reset Delay start or Child lock functions (refer to the appropriate sections in this manual).
	Water supply line is clogged.	Unclog water line.
	Water supply was turned off.	Turn on water supply.
Fascia panel is discolored or scratched.	Panel was cleaned with bleach-based wipes or abrasive cleaners/cleaning pads.	Use mild detergents with soft damp cloth.

Noise from dishes rattling or water striking tub walls.	Dishes weren't loaded properly, allowing dishes to hit each other or spray arms.	Load dishes properly into racks. ⟶ *"Loading the Dishwasher" on page 15*
	Light dishes or lightly loaded racks allow dishes to move or water sprays to strike tubs.	Load more dishes or distribute dishes more evenly/securely in the dishwasher.
Water leaks from tub or from around door.	Suds from using the wrong detergent (i.e. dish) or overfilling/spilling rinse aid.	Use an appropriate dishwasher detergent, don't overfill rinse aid and clean any spilled rinse aid. If suds still persist, add one tablespoon of vegetable oil and run the desired cycle.
	Door seal was misaligned or pulled from its track.	Make sure the door seal is securely inserted into its track.
	Condensation vent is blocked.	Clean out vent and move tall items like trays away from the vent.
	Improper installation.	Have an authorized service professional remount the dishwasher.
White limescale on dishes, tub, racks or door.	White residue coats dishwasher interior and racks wheels squeak from lime scale deposits in hard water.	Use a dishwasher cleaner every few months. If dishwasher has a water softener, increase the setting.
	Hard water kept 3 in 1 detergent or Eco detergent from being effective.	Use separate dishwasher detergent, rinse aid and dishwasher softener salt (if dishwasher has a softener).
	Under dosing of detergent.	Use more detergent or change to a more effective detergent.
	Rinse temperature is too low.	Select more intensive wash cycles with higher washing temperatures.
Detergent dispenser cover will not shut	Cover guides are blocked by sticky detergent residue.	Remove detergent residue.⟶ *"Detergent" on page 27*
Unable to select desired cycle	Previous cycle not finished.	⟶ *"Operating the Dishwasher" on page 34*

Touch sensitive keys not activating easily or activating without being touched * optional feature which may or may not be included with your dishwasher.	Water or other liquid on the surface.	Wiping the fascia with a wet cloth may cause unwanted activation. wipe the fascia with a soft, dry cloth when possible. If you must use a damp cloth to clean, dry immediately. Never pour water on the controls.
	Touch keys not being activated properly.	Press the center of the touch key with the flat area of your fingertip. A beep will sound to indicate that the selection has been made. Touching the keys lightly should work. **Note:** There is a built-in delay to prevent someone from launching several actions at once by accidentally wiping their hand (or a cleaning cloth) across the control panel.

Customer Service

Your Bosch® dishwasher requires no special care other than that described in the Care and Maintenance section of this manual. If you are having a problem with your dishwasher, before calling for service please refer to the Troubleshooting Guide section of the manual. If service is necessary, contact your dealer or installer or an authorized service center. Do not attempt to repair the appliance yourself. Any work performed by unauthorized personnel may void the warranty.

If you are having a problem with your Bosch® dishwasher and are not pleased with the service you have received, please take the following steps until the problem is corrected to your satisfaction:

1. Call us at 1-800-944-2904
2. Contact Customer Service from our web site: **www.bosch-home.com/us** or **www.bosch-home.ca**
3. Contact your installer or the Bosch Authorized Service Contractor in your area.
4. Write us:

BSH Home Appliances Corporation
1901 Main Street
Irvine, CA 92614

Please be sure to include your model information as well as an explanation of the problem and the date it started. You will find the model and serial number information on the label located on the edge of the dishwasher door. Please make a copy of your invoice and keep it with this manual. The customer may be required to show proof of purchase to validate warranty coverage.

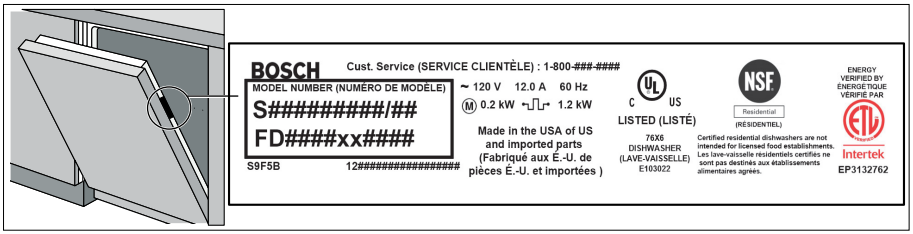

Statement of Limited Product Warranty

What this Warranty Covers & Who it Applies to:

The limited warranty provided by BSH Home Appliances (“Bosch“) in this Statement of Limited Product Warranty applies only to the Bosch appliance sold to you (“Product“), provided that the Product was purchased:

- For your normal, household (non-commercial) use, and has in fact at all times only been used for normal household purposes.
- New at retail (not a display, "as is", or previously returned model), and not for resale, or commercial use.
- Within the United States or Canada, and has at all times remained within the country of original purchase.

The warranties stated herein apply to the original purchaser of the product warranted herein and to each succeeding owner of the product purchased for ordinary home use during the term of the warranty.

Please make sure to return your registration card; while not necessary to effectuate warranty coverage, it is the best way for Bosch to notify you in the unlikely event of a safety notice or product recall.

How Long the Warranty Lasts

Bosch warrants that the Product is free from defects in materials and workmanship for a period of three hundred sixty-five (365) days from the date of the original purchase. The foregoing timeline begins to run upon the date of the original purchase, and shall not be stalled, tolled, extended, or suspended, for any reason whatsoever.

This Product is also warranted to be free from *cosmetic* defects in material and workmanship (such as scratches of stainless steel, paint/porcelain blemishes, chip, dents, or other damage to the finish) of the Product, for a period of sixty (60) days from the date of purchase or closing date for new construction. This *cosmetic* warranty excludes slight color variations due to inherent differences in painted and porcelain parts, as well as differences caused by kitchen lighting, product location, or other similar factors. This *cosmetic* warranty specifically excludes any display, floor, “As Is”, or “B” stock appliances.

Extended Limited Warranty

BSH also provides these additional limited warranties:

- 5 year limited warranty on electronics: BSH will repair or replace any BSH microprocessor or printed circuit board if it proves to be defective in materials or workmanship (excludes labor charges).
- 5 year limited warranty on dish racks: BSH will replace the upper or lower dish rack (excluding rack components), if the rack proves defective in materials or workmanship (excludes labor charges).
- Lifetime warranty against stainless steel rust through: BSH will repair or replace your dishwasher with the same model or a current model that is substantially equivalent or better in functionality, if the inner liner should rust through (excludes labor charges).

- BSH will repair or replace the stainless steel door if the door should rust through (excludes labor charges).

Repair/Replace as Your Exclusive Remedy

During this warranty period, Bosch or one of its authorized service providers will repair your Product without charge to you (subject to certain limitations stated herein) if your Product proves to have been manufactured with a defect in materials or workmanship. If reasonable attempts to repair the Product have been made without success, then Bosch will replace your Product (upgraded models may be available to you, in Bosch's sole discretion, for an additional charge). Nothing in this warranty requires damaged or defective parts to be replaced with parts of a different type or design than the original part. All removed parts and components shall become the property of Bosch at its sole option. All replaced and/or repaired parts shall assume the identity of the original part for purposes of this warranty and this warranty shall not be extended with respect to such parts. Bosch's sole liability and responsibility hereunder is to repair manufacturer-defective Product only, using a Bosch-authorized service provider during normal business hours. For safety and property damage concerns, Bosch highly recommends that you do not attempt to repair the Product yourself, or use a non-authorized service provider; Bosch will have no responsibility or liability for repairs or work performed by a non-authorized service provider. Authorized service providers are those persons or companies that have been specially trained on Bosch products, and who possess, in Bosch's opinion, a superior reputation for customer service and technical ability (note that they are independent entities and are not agents, partners, affiliates or representatives of Bosch). Notwithstanding the foregoing, Bosch will not incur any liability, or have responsibility, for the Product if it is located in a remote area (more than 100 miles from an authorized service provider) or is reasonably inaccessible, hazardous, threatening, or treacherous locale, surroundings, or environment; in any such event, if you request, Bosch would still pay for labor and parts and ship the parts to the nearest authorized service provider, but you would still be fully liable and responsible for any travel time or other special charges by the service company, assuming they agree to make the service call.

Out of Warranty Product

Bosch is under no obligation, at law or otherwise, to provide you with any concessions, including repairs, prorates, or Product replacement, once this warranty has expired.

Warranty Exclusions

The warranty coverage described herein excludes all defects or damage that are not the direct fault of Bosch, including without limitation, one or more of the following:

- Use of the Product in anything other than its normal, customary and intended manner (including without limitation, any form of commercial use, use or storage of an indoor product outdoors, use of the Product in conjunction with air or water-going vessels).

- Any party's willful misconduct, negligence, misuse, abuse, accidents, neglect, improper operation, failure to maintain, improper or negligent installation, tampering, failure to follow operating instructions, mishandling, unauthorized service (including self performed "fixing" or exploration of the appliance's internal workings).
- Adjustment, alteration or modification of any kind.
- A failure to comply with any applicable state, local, city, or county electrical, plumbing and/or building codes, regulations, or laws, including failure to install the product in strict conformity with local fire and building codes and regulations.
- Ordinary wear and tear, spills of food, liquid, grease accumulations, or other substances that accumulate on, in, or around the Product.
- Any external, elemental and/or environmental forces and factors, including without limitation, rain, wind, sand, floods, fires, mud slides, freezing temperatures, excessive moisture or extended exposure to humidity, lightning, power surges, structural failures surrounding the appliance, and acts of God.
- Service calls to correct the installation of your Product, to instruct you how to use your Product, to replace house fuses or correct house wiring or plumbing.

In no event shall Bosch have any liability or responsibility whatsoever for damage to surrounding property, including cabinetry, floors, ceilings, and other structures or objects around the Product. Also excluded from this warranty are Products, on which the serial numbers have been altered, defaced, or removed; service visits to teach you how to use the Product, or visits where there is nothing wrong with the Product; correction of installation problems (you are solely responsible for any structure and setting for the Product, including all electrical, plumbing or other connecting facilities, for proper foundation/flooring, and for any alterations including without limitation cabinetry, walls, floors, shelving, etc.); and resetting of breakers or fuses.

TO THE EXTENT ALLOWED BY LAW, THIS WARRANTY SETS OUT YOUR EXCLUSIVE REMEDIES WITH RESPECT TO PRODUCT, WHETHER THE CLAIM ARISES IN CONTRACT OR TORT (INCLUDING STRICT LIABILITY, OR NEGLIGENCE) OR OTHERWISE. THIS WARRANTY IS IN LIEU OF ALL OTHER WARRANTIES, WHETHER EXPRESS OR IMPLIED. ANY WARRANTY IMPLIED BY LAW, WHETHER FOR MERCHANTABILITY OR FITNESS FOR A PARTICULAR PURPOSE, OR OTHERWISE, SHALL BE EFFECTIVE ONLY FOR THE PERIOD THAT THIS EXPRESS LIMITED WARRANTY IS EFFECTIVE. IN NO EVENT WILL THE MANUFACTURER BE LIABLE FOR CONSEQUENTIAL, SPECIAL, INCIDENTAL, INDIRECT, "BUSINESS LOSS", AND/OR PUNITIVE DAMAGES, LOSSES, OR EXPENSES, INCLUDING WITHOUT LIMITATION TIME AWAY FROM WORK, HOTELS AND/OR RESTAURANT MEALS, REMODELLING EXPENSES IN EXCESS OF DIRECT DAMAGES WHICH ARE DEFINITIVELY CAUSED EXCLUSIVELY BY BOSCH, OR OTHERWISE. SOME STATES DO NOT ALLOW THE EXCLUSION OR LIMITATION OF INCIDENTAL OR CONSEQUENTIAL DAMAGES, AND SOME STATES DO NOT ALLOW LIMITATIONS ON HOW LONG AN IMPLIED WARRANTY LASTS, SO THE ABOVE EXCLUSIONS OR

LIMITATIONS MAY NOT APPLY TO YOU. THIS WARRANTY GIVES YOU SPECIFIC LEGAL RIGHTS, AND YOU MAY ALSO HAVE OTHER RIGHTS WHICH VARY FROM STATE TO STATE.

No attempt to alter, modify or amend this warranty shall be effective unless authorized in writing by an officer of BSH.

Obtaining Warranty Service:

To obtain warranty service for your Product, you should contact Bosch Customer Service at 1-800-944-2904 to schedule a repair.

BSH reserves the right to change specifications or design without notice. Some models are certified for use in Canada. BSH is not responsible for products which are transported from the United States for use in Canada. Check with your local Canadian distributor or dealer.

BSH se réserve le droit de modifier les données techniques ou le design sans préavis. Certains modèles sont certifiés pour une utilisation au Canada. BSH n'est pas responsable pour les produits transportés des États-Unis pour une utilisation au Canada. Vérifier auprès d'un marchand ou distributeur canadien.

BSH Home Appliances Corporation
1901 Main Street, Suite 600
Irvine, CA 92614
1-800-944-2904

9001411179
(0007) MU 640A