Register your new Bosch now:
**www.bosch-home.com/welcome**

# Dishwasher
# SM...
# SB...

BOSCH

**en** Instruction manual

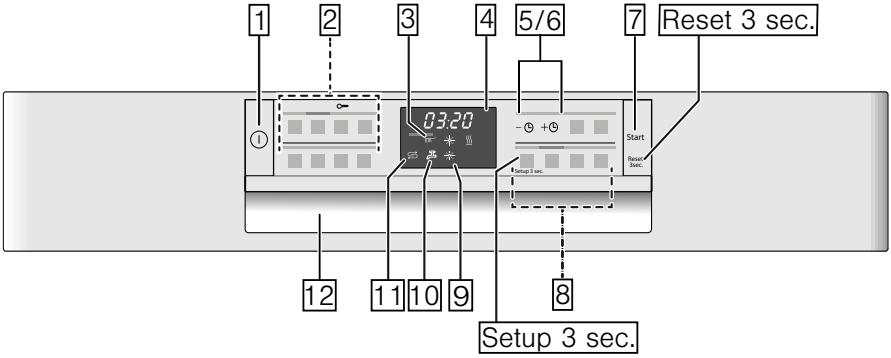
1
2
3
4
5/6
7
Reset 3 sec.
03:20
Start
Reset 3sec.
Setup 3 sec.
12
11
10
9
8
Setup 3 sec.

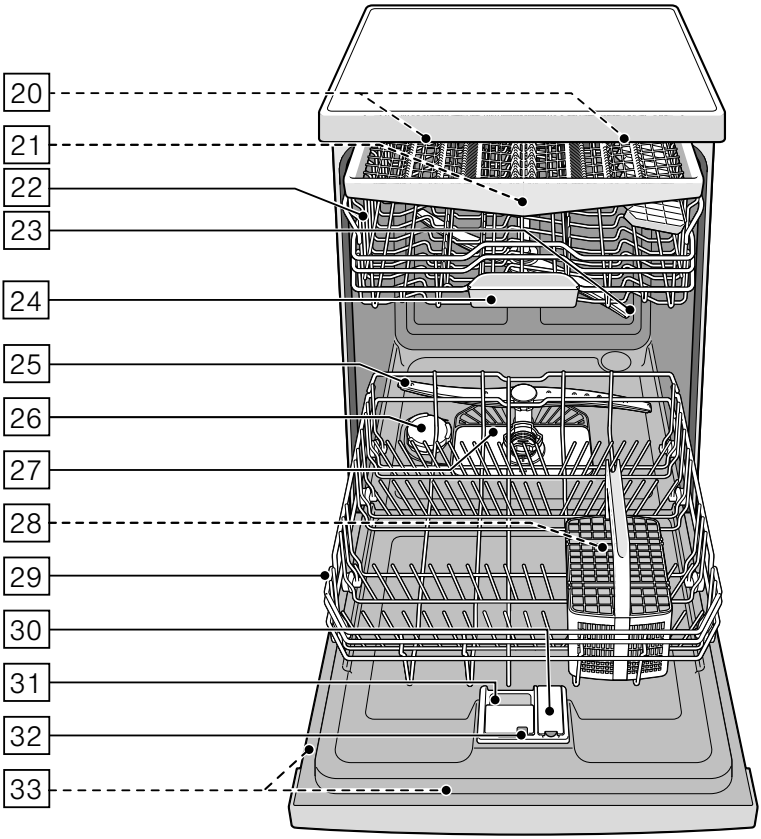
20
21
22
23
24
25
26
27
28
29
30
31
32
33

# Table of contents


**Intended use . . . . . 5**

**Safety instructions. . . . . 5**

Before you switch ON the appliance . . . . . 5
Delivery. . . . . 5
Installation. . . . . 6
In daily use . . . . . 7
Door lock . . . . . 7
Button lock . . . . . 8
Damage . . . . . 9
Disposal . . . . . 9

**Environmental protection . . . . . 11**

Packaging. . . . . 11
Old appliances . . . . . 11

**Getting to know your appliance . . . . . 12**

Control panel . . . . . 12
Appliance interior . . . . . 12
Overview of menu. . . . . 13
Eco drying . . . . . 14

**Water softening system / special salt . . . . . 15**

Water hardness table . . . . . 15
Adjusting the water softening system . . . . . 15
Using special salt . . . . . 16
Detergent with a salt component . . . 16
Switching off water softening unit . . . 16

**Rinse aid . . . . . 17**

Setting amount of rinse aid. . . . . 17
Detergent with a rinse aid component . . . . . 18
Switching off rinse aid refill indicator . . . . . 18

**Utensils. . . . . 18**

Not suitable . . . . . 18
Glass and utensil damage. . . . . 18
Loading the dishwasher . . . . . 19
Upper basket. . . . . 19
Lower basket. . . . . 19
Cutlery basket . . . . . 20
Cutlery drawer . . . . . 20
Etagere . . . . . 21
Folding spikes . . . . . 21
Small items holder. . . . . 21
Knife rack . . . . . 22
Baking sheet spray head. . . . . 22
Unloading the dishwasher. . . . . 23
Adjusting the height of the basket . . . . . 23

**Detergent . . . . . 24**

Adding detergent. . . . . 25
Combination detergent . . . . . 26

**Overview of programmes . . . . . 27**

Programme selection . . . . . 28
Information for test institutes . . . . . 28
turboSpeed 20 min.. . . . . 29

**Additional functions . . . . . 30**

Save time (VarioSpeedPlus) . . . . . 30
Half load . . . . . 30
hygienePlus (HygienePlus) . . . . . 30
intensiveZone . . . . . 30
extraDry. . . . . 30
Shine and Dry . . . . . 30
Energy Save . . . . . 30

**Operating the appliance . . . . . 31**
Programme data . . . . . .31
Changing the settings . . . . . .31
AquaSensor. . . . . .31
Sensor setting . . . . . .31
ExtraDry. . . . . .32
Auto Power Off . . . . . .32
EmotionLight . . . . . .32
Changing start programme . . . . . .32
Tone volume . . . . . .32
Button volume . . . . . .33
Eco drying . . . . . .33
Factory setting. . . . . .33
Switching on the appliance . . . . . .33
Remaining running time display. . . . .34
Time preselection . . . . . .34
Programme end. . . . . .34
Switching off the appliance . . . . . .34
Interrupting the programme. . . . . .35
Terminating the programme . . . . . .35
Changing the programme . . . . . .35

**Cleaning and maintenance . . . . . 35**
Overall status of the dishwasher . . . .35
Machine Care . . . . . .36
Special salt and rinse aid . . . . . .37
Filters. . . . . .37
Spray arms . . . . . .38

**Fault, what to do? . . . . . .38**
Waste water pump . . . . . 39
Fault table . . . . . 40

**Customer service . . . . . .49**

**Installation and connection . . . . . .49**
Contents of package . . . . . 49
Safety instructions . . . . . 49
Delivery . . . . . 50
Technical specifications . . . . . 50
Installation . . . . . 50
Drainage connection . . . . . 50
Drinking water connection . . . . . 51
Hot water connection . . . . . 51
Electrical connection . . . . . 52
Removal . . . . . 52
Transporting . . . . . 53
Protection against frost (Emptying the appliance) . . . . . 53

## Intended use

- This appliance is intended for use in the home and domestic environments.
- Use the dishwasher only in the home and only for its designated purpose: for washing domestic dishes.
- This appliance is intended for use up to a maximum altitude of 4000 metres above sea level.

## Safety instructions

This appliance may be used by children over the age of 8 years old and by persons with reduced physical, sensory or mental capabilities or by persons with a lack of experience or knowledge if they are supervised or are instructed by a person responsible for their safety how to use the appliance safely and have understood the associated hazards.

Children must not play with, on, or around the appliance. Children must not clean the appliance or carry out general maintenance unless they are at least 8 years old and are being supervised.

Keep children below the age of 8 years old at a safe distance from the appliance and power cable.

### Before you switch ON the appliance

Please read the instructions for use and installation carefully. They contain important information on how to install, use and maintain the appliance.

Retain all documents for later use or for the subsequent owner.

You can download the instructions for use from our website free of charge. The relevant Internet address can be found overleaf on these instructions for use.

### Delivery

1. Check the packaging and dishwasher immediately for damage caused in transit. Do not switch on a damaged appliance, but contact your supplier.
2. Please dispose of the packaging material in an environmentally friendly manner.
3. Do not let children play with packaging and its parts. There is a risk of suffocation from collapsible boxes and film.

## Installation

- Following installation, ensure that the back of the dishwasher is not freely accessible (protection against contact due to hot surface).
- Install and connect the appliance according to the installation and assembly instructions.
- Prior to installation, disconnect the dishwasher from the power supply.
- Ensure that the protective conductor system of the domestic supply has been correctly installed.
- The electrical connection conditions must correspond with the specifications on the dishwasher rating plate 33.
- If the power cord of this appliance is damaged, it must be replaced with a particular power cord.
  To prevent injury, the power cord may be purchased from customer service only.
- If the dishwasher is installed in a high-sided unit, the unit must be secured properly.
- If the dishwasher is installed below or above other domestic appliances, follow the information for installation in combination with a dishwasher in the installation instructions for the particular appliances.
- Also follow the installation instructions for the dishwasher to ensure that all appliances are operated safely.
- If there is no information or if the installation instructions do not include the appropriate information, contact the manufacturer of these appliances to ensure that the dishwasher can be installed above or below these appliances.
- If you cannot obtain any information from the manufacturer, you must not install the dishwasher above or below these appliances.
- If you install a microwave oven above the dishwasher, the microwave oven may be damaged.
- Install built-under or integratable appliances only under continuous worktops which have been screwed to adjacent cupboards to ensure stability.
- Do not install the appliance near heat sources (radiators, heat storage tanks, cookers or other appliances which generate heat) and do not install under a hob.

- Please note that the insulation material of the dishwasher power cord may melt next to heat sources (e.g. heating / hot water installations) or hot appliance parts. Make sure that the power cord of the dishwasher never comes into contact with heat sources or hot appliance parts.
- After installing the appliance, ensure that the plug is easily accessible. ⟶ *"Electrical connection" on page 52*
- For some models:
  The plastic housing on the water connection contains an electric valve. The supply hose contains electrical connection cables. Do not cut through the supply hose. Do not immerse the plastic housing in water.

## In daily use

Read and observe the safety information and instructions for use on the packaging for cleaning and rinsing agents.

## Childproof lock (door lock) *

The child-proof lock (door lock) protects children from potential hazards which the dishwasher poses.

**⚠ Warning**
**Risk of suffocation!**
Children may become locked in the dishwasher and suffocate. Always completely close the appliance door when leaving the dishwasher.

**Activate the child-proof lock (door lock) as follows:**

1. Pull the catch of the child-proof lock towards yourself (1).
2. Close the door (2).

The child-proof lock is activated.

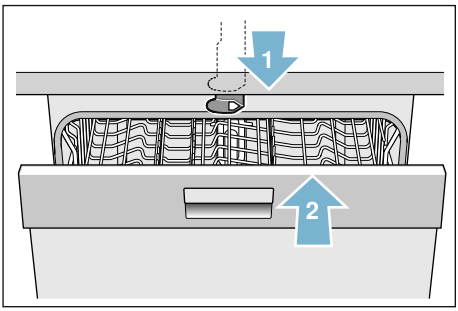

**Open the door with activated child-proof lock (door lock) as follows:**

1. Press the catch of the child-proof lock to the right (1).
2. Open the door (2).

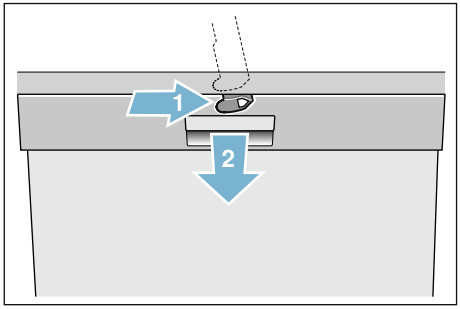


**Deactivate the child-proof lock (door lock) as follows:**

1. Press the catch of the child-proof lock to the right (1).
2. Press the catch of the child-proof lock backwards (2).

The childproof lock is deactivated.

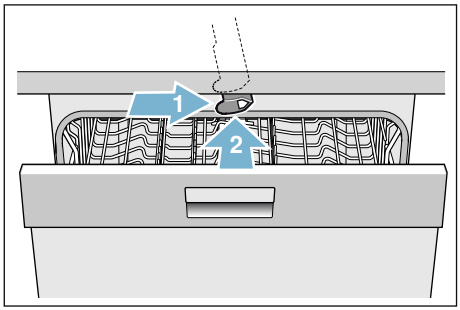


* depending on the features of your dishwasher

## Childproof lock (button lock)

You can prevent your dishwasher being switched off inadvertently (e.g. by children pressing the buttons).

**Here's how to activate the button lock:**

1. Start the desired programme.
2. Press and hold the button for about 4 seconds.
   In the display window you will see CL.

The button lock has now been activated.

If any of the buttons are pressed while the programme is running, CL will appear in the display window. It is not possible to cancel the programme (Reset).

To **deactivate** the button lock, hold down the button for about 4 seconds until CL disappears from the display window.

The button lock is cancelled automatically at the end of the programme. In the event of a power failure, the button lock will be maintained. You need to reactivate the button lock at the beginning of every programme.

## Damage

- The appliance may be repaired and opened up by a technician only. To do this, disconnect the appliance from the power supply. Pull out the mains plug or switch off the fuse. Turn off the tap.
- If the appliance is damaged, especially the control panel (cracks, holes, broken buttons), or the door function is impaired, stop operating the appliance. Pull out the mains plug or switch off the fuse. Turn off tap, call customer service.

## Disposal

1. Make redundant appliances unusable to prevent subsequent accidents.
2. Dispose of the appliance in an environmentally friendly manner.

**⚠ Warning**
**Risk of injury!**

- To prevent injuries, e.g. caused by stumbling, open the dishwasher only briefly in order to load and unload the dishwasher.
- Knives and other utensils with sharp points must be placed with the points downwards in the cutlery basket* 28 or horizontally on the knife shelf* or in the cutlery drawer* 21.
- Do not lean or sit on the open door.
- In the case of free-standing appliances, ensure that the baskets are not overloaded. The appliance could tip.
- If the appliance is not in a cavity and a side panel is accessible, the door hinge area must be covered at the side for reasons of safety (risk of injury). The covers are available as optional accessories from customer service or specialist outlets.

* depending on the features of your dishwasher

**⚠ Warning**
**Risk of explosion!**
Do not add any solvents to the rinsing compartment. Danger of explosion!

**⚠ Warning**
**Risk of scalding!**
Open the door carefully when the programme is still running. There is a risk of hot water spraying out of the appliance.

**⚠ Warning**
**Risk to children!**

- If fitted, use the childproof lock.
- Do not allow children to play with or operate the appliance.
- Keep children away from detergents and rinse aid. These may cause chemical burns in the mouth, throat and eyes or asphyxiation.
- Keep children away from open dishwasher. There may be small parts in the dishwasher which children could swallow and the water inside the dishwasher is not drinking water as it may contain detergent residue.
- Ensure that children do not place fingers in the tablet collecting tray [24]. Small fingers could become caught in the slots.
- When opening and closing the door on an eye-level appliance, ensure that children do not become jammed or crushed between the appliance door and the cupboard door below.
- Children could become locked in the appliance (danger of suffocation) or get into another dangerous situation.
  Redundant appliances: Pull out the mains plug, sever and dispose of the power cord. Destroy the door lock so that the door can no longer be closed.

# Environmental protection

Both the packaging of new appliances and the old appliances themselves contain valuable raw materials and recyclable materials.

Please dispose of the individual parts separated according to type.

Please ask your dealer or inquire at your local authority about current means of disposal.

## Packaging

All plastic parts of the appliance are identified with internationally standardised abbreviations (e.g. PS polystyrene). Therefore, plastic waste can be sorted out when the appliance is being disposed of.

Please follow the safety instructions under “Delivery” → *Page 5*.

## Old appliances

Please follow the safety instructions under “Disposal of your appliance” → *Page 9*.

This appliance has been identified in accordance with the European Directive 2012/19/EU on Waste Electrical and Electronic Equipment (WEEE). The directive provides a framework for the collection and recycling of old appliances, which is valid across the EU.

# Getting to know your appliance

Diagrams of the control panel and the interior of the appliance can be found at the front of the manual. Individual positions are referred to in the text.

## Control panel

See Fig. ⟶ *Page 2*

1 On/off switch
2 Programme buttons **
3 Program progress indicator
4 Display window
5 Selection buttons
6 Time preselection
7 START button
8 Additional functions/programme buttons **
9 Rinse aid refill indicator
10 Display "Check water supply"
11 Salt refill indicator
12 Door opener

* depending on the features of your dishwasher

** number depending on the features of your dishwasher

## Appliance interior

See Fig. ⟶ *Page 2*

20 Interior light *
21 Cutlery drawer *
22 Top basket
23 Upper spray arm
24 Tablet collecting tray
25 Lower spray arm
26 Dispenser for special salt
27 Filters
28 Cutlery basket *
29 Bottom basket
30 Dispenser for rinse aid
31 Detergent dispenser
32 Lock for detergent dispenser
33 Rating plate

* depending on the features of your dishwasher

## Overview of menu

The dishwasher has been preset with certain settings for your convenience. The settings can be found in the individual chapters. You can change these factory settings.

**Here's how to change the settings:**

1. Switch on ON/OFF switch [1].
2. Press and hold the setup 3 sec. button for 3 seconds.
   In the display window [4] you will see H:0... and set.
3. Press the setup 3 sec. button to access the individual settings.
4. Adjust the setting using the buttons **+ and -** [5].
5. Press and hold the setup 3 sec. button for 3 seconds.

The chosen setting has now been stored in your dishwasher.

You have the option of resetting all changed settings back to the original factory settings.

**Tip:** If you want to change a number of settings, first make all your changes one after another. Then press the setup 3 sec. button for 3 seconds. All the settings will then be stored in the dishwasher.

| Setting up | Factory setting | Description |
|---|---|---|
| H Water hardness<br>H:00 - H:07 | H:04 | Setting water hardness. When using Multitabs, select the lowest setting. |
| r Rinse aid<br>r:00 - r:06 | r:05 | Amount of rinse aid affects drying. When using Multitabs, select setting 0. |
| SE Sensor setting<br>SE:00 - SE:02 | SE:00 | Adjustment of soiling detection for optimum cleaning result. |
| d ExtraDry<br>d:00 - d:01 | d:00 / Off | Improved drying for glasses and plastic tableware. |
| A Hot water *<br>A:00 - A:01 | A:00 / Off | The dishwasher can be connected to either hot (40-60°C) or cold water (<40°C). |
| P Auto Power Off<br>P:00 - P:02 | P:01 | Appliance automatically switches off at the end of each wash. |
| E EmotionLight *<br>E:00 - E:01 | E:01 / On | Interior light. |
| SP Start up programme<br>SP:00 - SP:01 | SP:01 / Eco 50° | When you switch on, the most recently selected programme appears. |

* depending on the configuration of your specific dishwasher

| Setting up | Factory setting | Description |
|---|---|---|
| SL Tone volume *<br>SL:00 - SL:03 | SL:02 | Volume of the signal. |
| bL Button volume *<br>bL:00 - bL:03 | bL:02 | Volume when using button. |
| o Eco drying<br>o:00 - o:01 | o:01 / On | At the end of the Eco programme the door opens automatically. |
| rE Factory setting | YES<br>Confirm with + | Reset to the factory setting. |

* depending on the configuration of your specific dishwasher

## Eco drying

Your dishwasher features the Eco drying function. If you have selected the Eco 50° programme, the door opens automatically when the programme ends. You can switch Eco drying on or off → *"Operating the appliance" on page 31*.

# Water softening system / special salt

To ensure good rinsing results, the dishwasher requires soft water, i.e. water which is low in lime, otherwise limescale will be deposited on the utensils and interior container. Tap water above 7° dH (1.2 mmol/l) must be softened. The water is softened with special salt (regeneration salt) in the water softening system of the dishwasher. The setting and therefore the required amount of salt depends on the degree of hardness of your tap water (see following water hardness table).

## Water hardness table

| Water hardness value °Clarke | Hardness range | mmol/l | Set value on the machine |
|---|---|---|---|
| 0–8 | soft | 0–1.1 | H:00 |
| 9–10 | soft | 1.2–1.4 | H:01 |
| 11–12 | medium | 1.5–1.8 | H:02 |
| 13–15 | medium | 1.9–2.1 | H:03 |
| 16–20 | medium | 2.2–2.9 | H:04 |
| 21–26 | hard | 3.0–3.7 | H:05 |
| 27–38 | hard | 3.8–5.4 | H:06 |
| 39–62 | hard | 5.5–8.9 | H:07 |

## Adjusting the water softening system

You can set the amount of salt that should be added to a value between H:00 and H:07. No salt is needed with the setting H:00.

**Here's how to set up the amount of added salt:**

1. Ask your local water utility company for the water hardness value of the tap water.
2. Required setting can be found in the water hardness table.
3. Switch on ON/OFF switch 1.
4. Press and hold the setup 3 sec. button for 3 seconds.
   In the display window 4 you will see the factory setting H:04 and set.
5. Adjust the setting using the buttons **-** **and +** 5.
6. Press and hold the setup 3 sec. button for 3 seconds.

The chosen setting has now been stored in your dishwasher.

## Using special salt

Top up the special salt as soon as the salt refill indicator 11 lights up in the control panel. Always top up the special salt immediately before switching on the dishwasher. This ensures that overrun special salt solution is immediately rinsed out and that corrosion in the washing tank cannot occur.

**Caution!**
Detergent will destroy the water softening unit! Never pour detergent into the dispenser for special salt.

**Top up the special salt as follows:**

1. Undo the screw plug on the dispenser 26.
2. Fill the dispenser with water (required only when switching on the appliance for the first time).
3. Add special salt as illustrated **(do not use table salt or tablets)**.
   The water is displaced and runs out.

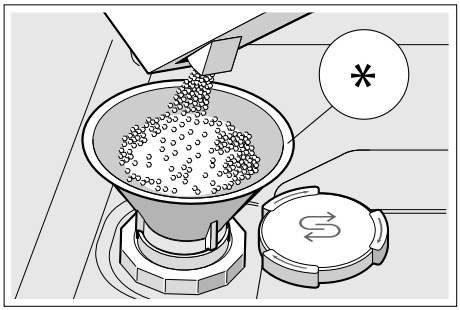


*Depending on the features of your dishwasher

## Using detergent with a salt component

In general, you can use detergent with a salt component up to a water hardness level of 21 °dH (37 °fH, 26 °Clark, 3.7 mmol/L) without adding special salt. Above a water hardness value of 21 °dH, use additional special salt.

## Switching off salt refill indicator/water softening unit

If the salt refill indicator 11 bothers you (e.g. if you are using a combination detergent with a salt component), you can switch off the salt refill indicator.

Proceed as described under "Setting water softening unit" and set the value to H:00. The water softening unit and the salt refill indicator are switched off.

# Rinse aid

The rinse aid ensures stain-free dishes and clear glasses. Use only rinse aid for domestic dishwashers. As soon as the rinse aid refill indicator [9] lights up in the control panel, there is still a rinse aid reserve of 1-2 rinse cycles. Top up the rinse aid.

**Top up the rinse aid as follows:**

1. Open dispenser [30]; press lug on the lid (1) and lift (2).

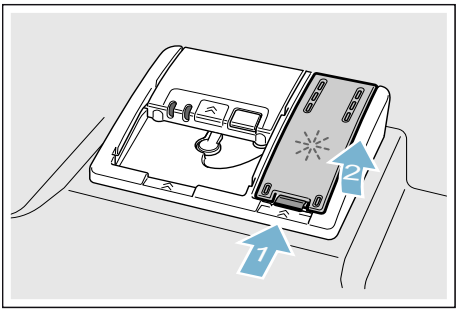


2. Add rinse aid up to the max. mark.

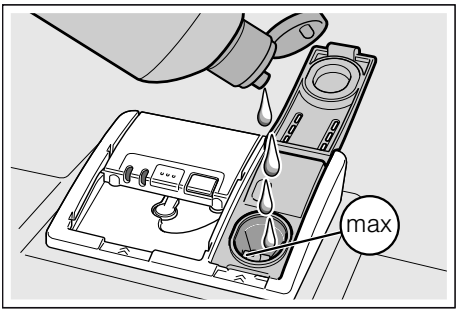


3. Close the lid.
   The lid "clicks" into position.
4. Remove overflowed rinse aid with a cloth.
   This prevents excessive frothing during the next rinse cycle.

## Setting amount of rinse aid

You can set the amount of rinse aid that should be added to a value between r:00 and r:06. Setting the amount of rinse aid to be dispensed to r:05 will give you a very good drying result. The factory setting is r:05. Do not change the amount of rinse aid unless there are streaks or water stains on the utensils. Set a lower level to avoid streaks. Set a higher level to avoid water stains.

**Here's how to set the amount of rinse aid:**

1. Switch on ON/OFF switch [1].
2. Press and hold the setup 3 sec. button for 3 seconds.
   The value H:0... and set will appear in the display window [4]. .
3. Press the setup 3 sec. button repeatedly until the factory setting value r:05 appears in the display window [4].
4. Adjust the setting using the buttons **-** **and +** [5].
5. Press and hold the setup 3 sec. button for 3 seconds.

The chosen setting has now been stored in your dishwasher.

## Using detergent with a rinse aid component

In general, you can use detergent with a rinse aid component up to a water hardness level of 21 °dH (37 °fH, 26 °Clark, 3.7 mmol/L) without adding rinse aid. Above a water hardness value of 21 °dH, use additional rinse aid.

## Switching off rinse aid refill indicator

If the rinse aid refill indicator 9 bothers you (e.g. if you are using a combination detergent with a rinse aid component), you can switch off the rinse aid refill indicator.

Proceed as described under "Setting rinse aid quantity" and set the level to r:00. The rinse aid refill indicator 9 is switched off.

# Utensils

## Not suitable

- Cutlery and utensils made of wood.
- Delicate decorative glasses, craft and antique utensils. These decors are not dishwasher-proof.
- Plastic parts not resistant to heat.
- Copper and tin utensils.
- Utensils which are soiled with ash, wax, lubricating grease or ink.

Aluminium and silver parts have a tendency to discolour and fade during the wash cycle. Even some types of glass (e.g. crystal glass objects) may turn cloudy after many wash cycles.

## Glass and utensil damage

**Causes:**

- Glass type and glass production process.
- Chemical composition of the detergent.
- Water temperature of the wash programme.

**Recommendation:**

- Use only glasses and porcelain which the manufacturer designates as dishwasher-proof.
- Use a detergent which protects utensils.
- Take glass and cutlery out of the dishwasher as soon as possible after the programme ends.

## Loading the dishwasher

1. Remove large food remnants. It is not necessary to prerinse utensils under running water.
2. Place the utensils so that
   - they are secure and cannot tip over.
   - all utensils with their openings face down.
   - parts with curves or indentations are at an angle, thereby allowing water to drain.
   - does not obstruct rotation of the two spray arms [23] and [25].

Very small utensils should not be washed in the machine, as they may fall out of the baskets.

## Upper basket

Arrange cups and glasses in the upper basket [22].

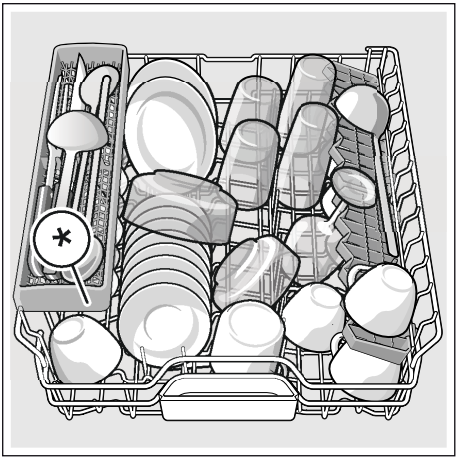

* depending on the features of your dishwasher

**Note:** Utensils must not be placed above the tablet collecting tray [24]. These may block the lid of the detergent dispenser and prevent it from opening fully.

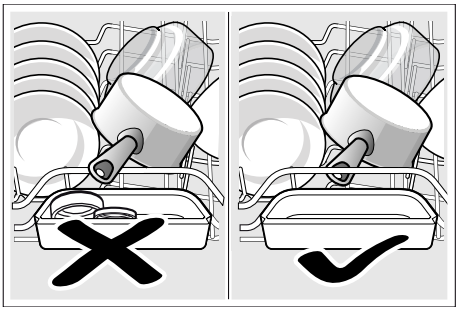

## Lower basket

Arrange pots and plates in the lower basket [29].

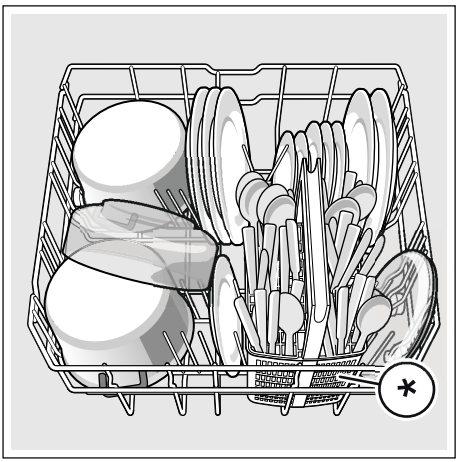

* depending on the features of your dishwasher

**Tip:** Heavily soiled utensils (pans) should be placed in the lower basket. The more powerful spray jet provides a better dishwashing result.

**Tip:** Other examples, such as the best way of loading your dishwasher, can be found on our homepage. These can be downloaded free of charge. The corresponding Internet address can be found on the back page of these instructions for use.

## Cutlery basket *

Place cutlery, always unsorted with the tips face down, in the cutlery basket *.

To prevent injuries, place long, pointed implements and knives on the knife shelf *.

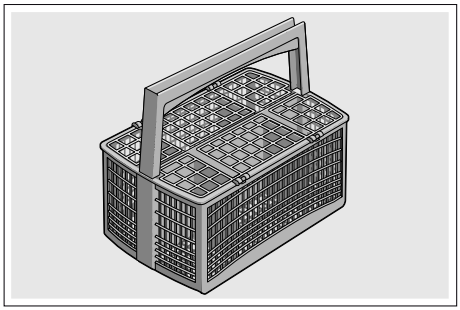

* depending on the features of your dishwasher

## Cutlery drawer *

Arrange the cutlery in the cutlery drawer 21 as illustrated. Separately arranged utensils are easier to remove after washing.

You can take out the cutlery drawer.

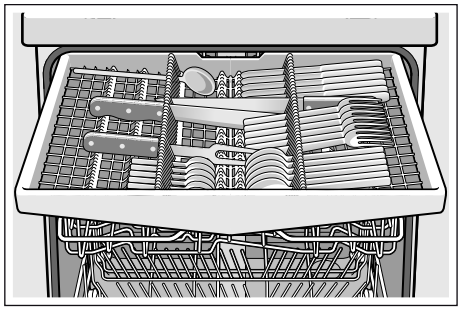

Depending on the features of your dishwasher, you can fold down the side shelves to provide more room for taller items of cutlery. The front rows of prongs can be folded down to provide room for wider handles.

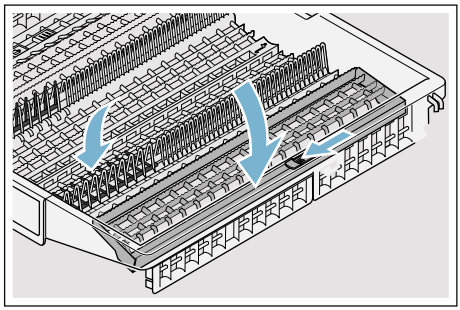

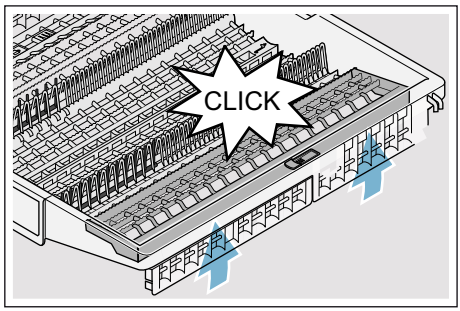


* depending on the features of your dishwasher

## Etagere *

The etagere and the space underneath can be used for small cups and glasses or for larger items of cutlery, such as wooden spoons or serving cutlery. If you do not require the etagere, it can be folded up.

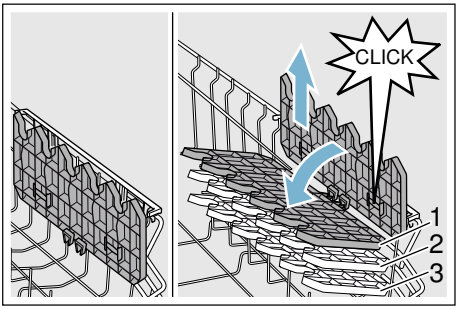


* Depending on the features of your dishwasher, you can adjust the etagere 3 times the height.

**Adjust the height of the etagere as follows:**

1. Position the etagere vertically and pull upwards.
2. Push etagere at a slight angle downwards to the required height (1, 2, or 3).
3. Engage etagere.
   Etagere “clicks” into position.

## Folding spikes *

* Depending on the features of your dishwasher, the spikes can be folded down. This facilitates arrangement of pots, bowls and glasses.

**Fold down the spikes as follows:**

1. Press lever forwards (1).
2. Fold down spikes (2).

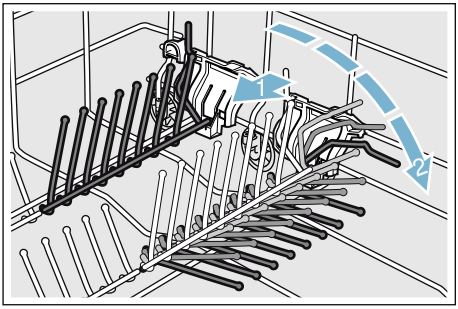


## Small items holder *

* Depending on the features of your dishwasher, the upper basket is fitted with small items holders. The small items holders can be used to securely attach light plastic parts.

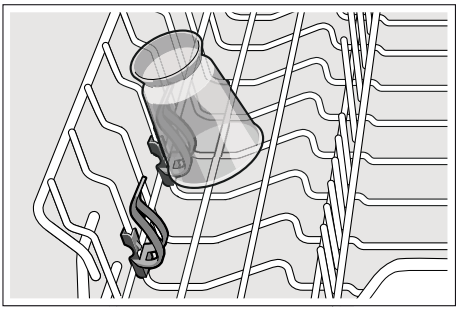

## Knife rack *

* Depending on the features of your dishwasher, the upper basket is fitted with a knife shelf. Long knives and other utensils can be placed in the knife shelf.

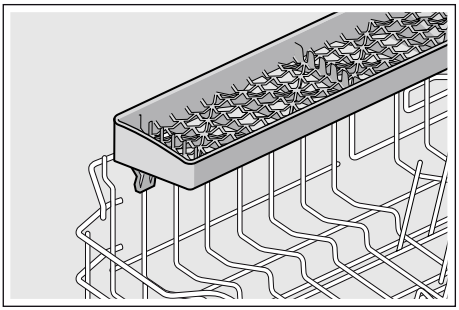

## Baking sheet spray head *

* depending on the features of your dishwasher

Large trays or grilles as well as large plates (gourmet plates, pasta plates, dinner plates) can be cleaned with this spray head.

**Insert the spray head as follows:**

1. Remove upper basket 22.
2. Insert spray head as illustrated and turn to the right.
   Spray head is engaged.

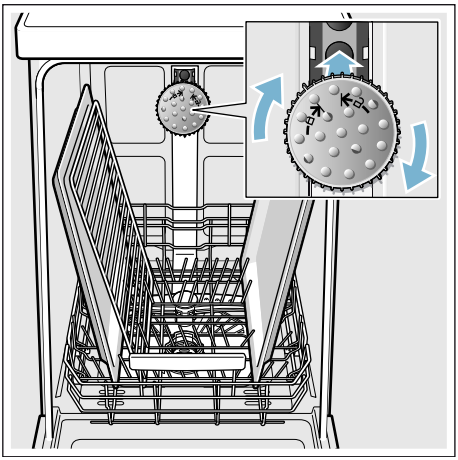

To ensure that the spray jet can reach all parts, arrange the baking sheets as illustrated (max. 2 baking sheets and 2 grilles).

**Note:** Ensure that the dishwasher is always operated with upper basket 22 or baking tray spray head.

## Unloading the dishwasher

To prevent water from dripping off the upper basket onto the utensils in the lower basket, it is recommended to empty the appliance from the bottom up.

**Tip:** Hot utensils are sensitive to shock! Therefore, when the programme ends, leave the utensils to cool down in the dishwasher until they can be handled.

**Note:** When the programme ends, water droplets can still be seen inside the appliance. This does not affect the drying of the utensils.

## Adjusting the height of the basket *

* depending on the features of your dishwasher

If required, the height of the upper basket [22] can be adjusted to create more space for taller utensils either in the upper or lower basket.

**Appliance height 81.5 cm**

| With cutlery basket | Upper basket | Lower basket |
|---|---|---|
| Setting 1 max. ø | 22 cm | 31 cm |
| Setting 2 max. ø | 24.5 cm | 27.5 cm |
| Setting 3 max. ø | 27 cm | 25 cm |

| With cutlery drawer | Upper basket | Lower basket |
|---|---|---|
| Setting 1 max. ø | 16 cm | 31 cm |
| Setting 2 max. ø | 18.5 cm | 27.5 cm |
| Setting 3 max. ø | 21 cm | 25 cm |

**Appliance height 86.5 cm**

| With cutlery basket | Upper basket | Lower basket |
|---|---|---|
| Setting 1 max. ø | 24 cm | 34 cm |
| Setting 2 max. ø | 26.5 cm | 30.5 cm |
| Setting 3 max. ø | 29 cm | 28 cm |

| With cutlery drawer | Upper basket | Lower basket |
|---|---|---|
| Setting 1 max. ø | 18 cm | 34 cm |
| Setting 2 max. ø | 20.5 cm | 30.5 cm |
| Setting 3 max. ø | 23 cm | 28 cm |

Arrange large plates up to a diameter of 31/34* cm in the lower basket [29] as illustrated.

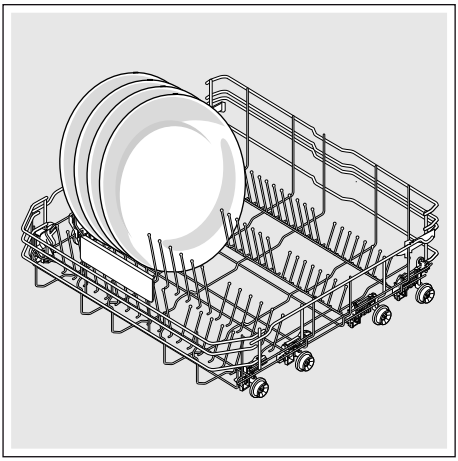

* depending on the features of your dishwasher

## Upper basket with side levers

1. Pull out upper basket 22.
2. Hold the sides of the basket along the upper edge.
   This prevents it from suddenly dropping.
3. To **lower** the upper basket; press in both levers on the left and right on the outside of the basket. The upper basket lowers.

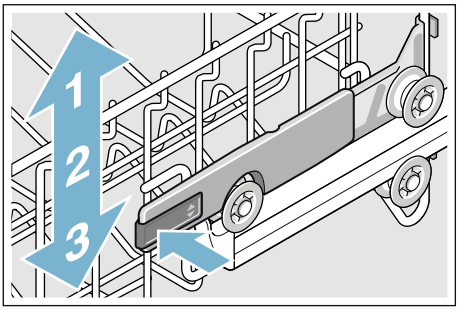


4. To **lift** the upper basket; grip the sides of the upper basket along the upper edge and lift.
5. Ensure that both sides of the upper basket are at the same height.
6. Push in upper basket.

## Upper basket with upper and lower pairs of rollers

1. Pull out upper basket 22.
2. Remove upper basket.
3. Re-attach upper basket to the upper (Setting 3) or lower (Setting 1) rollers.

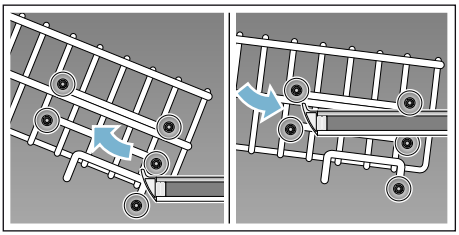

4. Push in upper basket.

# Detergent

You can use tablets as well as powder or liquid detergents for dishwashers, but never use washing-up liquid. The dosage can be individually adjusted with powder or a liquid detergent according to the degree of soiling. Tablets contain an adequately large amount of active ingredients for all cleaning tasks. Modern, powerful detergents predominantly use a low-alkaline formulation with enzymes. Enzymes break down starch and remove protein. To remove coloured stains (e.g. tea, ketchup), oxygen-based bleaching agents are generally used.

**Note:** To ensure a good washing result, always follow the instructions on the detergent packaging!
If you have further questions, we recommend that you contact the detergent manufacturers' helplines.

**Warning**
**Risk of injury and damage due to non-observance of the safety instructions for detergent and rinse-aid products!**
Always follow the safety instructions for detergent products and rinse-aid products.

## Adding detergent

1. If the detergent dispenser [31] is still closed, actuate locking bar [32] to open it.
2. Pour detergent into the dry detergent dispenser [31] only (insert tablet flat, not on its edge).
3. Dosage: see manufacturer's instructions on the packaging. Use graduated detergent dispenser. Usually 20 ml–25 ml are adequate for normal soiling. If using tablets, one tablet is adequate.

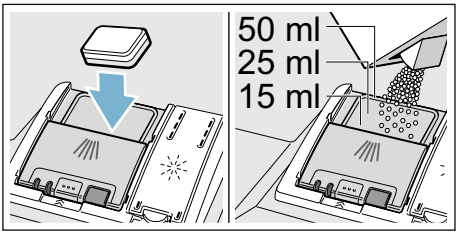


4. Close cover on the detergent dispenser.
   Cover "clicks" into position.

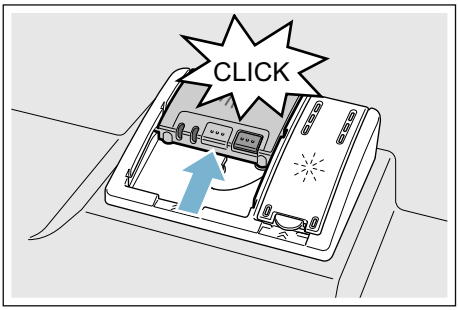


The detergent dispenser opens automatically at the optimum time depending on the programme. The powder or liquid detergent is distributed in the appliance and is dissolved, the tablet falls into the tablet collecting tray where it dissolves in doses.

**Tip:** If the utensils are only lightly soiled, slightly less than the indicated amount of detergent is usually adequate.
Suitable detergents and care products can be purchased online via our website or via customer service (see back page).

## Combination detergent

Apart from conventional detergents (Solo), a number of products are offered with additional functions. These products contain not only the detergent but also rinse-aid and salt replacement substances (3in1) and, depending on the combination (4in1, 5in1, ...), additional components such as glass protection or stainless steel cleaner. Combination detergents function only up to a specific degree of hardness (usually 21°dH). Over this limit salt and rinse-aid must be added.

As soon as combined detergents are used, the rinse programme is adjusted automatically to ensure the best possible rinsing and drying result.

### Notes

- If you want to add more utensils after the programme has started, do **not** use the tablet collecting tray [24] as a handle for the upper basket. The tablet could already be there and you will touch the partially dissolved tablet.
- Do **not** place small parts for washing in the tablet collecting tray [24]; this prevents the tablet from dissolving evenly.
- You will obtain optimum rinsing and drying results by using solo detergents and applying salt and rinse aid separately.
- If programmes are short, tablets may not have full cleaning effect due to different dissolving properties and there may even be undissolved detergent residue. It is recommended to use washing powder for these programmes.
- The dosing of a tablet is adequate for the “Intensive” programme (for some models). When using washing powder, you can apply some of this cleaning agent to the inside of the appliance’s door.
- Even if the rinse-aid and/or salt refill indicator is lit, the rinse programme will run correctly with combined detergents.
- If using detergents in a water-soluble protective cover: Take hold of the cover with dry hands only and put the detergent into an absolutely dry detergent dispenser only, otherwise the detergent may stick.
- If you switch from combined detergents to solo detergents, ensure that the water softening system and amount of rinse aid have been set to the correct value.
- Biological/eco detergents: Detergent products identified as “Bio” or “Eco” (to protect the environment) usually use lower quantities of active agents or completely dispense with certain substances. The cleaning effect of such products may occasionally be restricted.

# Overview of programmes

The max. possible number of programmes is illustrated in this overview. The corresponding programmes and their arrangement can be found on the fascia.

| Type of dish | Type of soiling | Programme | Possible additional options | Programme sequence |
|---|---|---|---|---|
| pots and pans, non-sensitive utensils and cutlery | very stubborn burned or dried-on food remains containing starch or protein | / Intensive 70° | all | **Intensive:**<br>Pre Rinse<br>Cleaning 70°<br>Intermediate rinse<br>Final rinse 69°<br>Drying |
| mixed utensils and cutlery | part dried, common household food remnants | auto / Auto 45° - 65° | all | **Sensor-controlled:**<br>Is optimised according to the soiling with the aid of sensors. |
| mixed utensils and cutlery | part dried, common household food remnants | / **eco**<br>Eco 50° | all | **Most economical:**<br>Pre Rinse<br>Cleaning 50°<br>Intermediate rinse<br>Final rinse 63°<br>Drying<br>Eco drying<br>The door opens automatically. |
| mixed utensils and cutlery | part dried, common household food remnants | / **Silence**<br>Silence 50° | intensiveZone<br>Half load<br>HygienePlus<br>ExtraDry<br>Shine and Dry | **Reduced noise:**<br>Pre Rinse<br>Cleaning 50°<br>Intermediate rinse<br>Final rinse 63°<br>Drying |
| sensitive utensils, cutlery, temperature-sensitive plastic and glasses | lightly adhering, fresh food remains | / Glass 40° | intensiveZone<br>VarioSpeedPlus<br>Half load<br>ExtraDry<br>Shine and Dry | **Particularly gentle:**<br>Pre Rinse<br>Cleaning 40°<br>Intermediate rinse<br>Final rinse 60°<br>Drying |
| mixed utensils and cutlery | part dried, common household food remnants | **1 h**<br>65° | Extra Dry<br>Shine and Dry | **Time-optimised:**<br>Cleaning 65°<br>Intermediate rinse<br>Final rinse 70°<br>Drying |

| Type of dish | Type of soiling | Programme | Possible additional options | Programme sequence |
|---|---|---|---|---|
| mixed utensils and cutlery | lightly adhering, fresh food remains | turboSpeed 20 min. | Extra Dry<br>Shine and Dry | Cleaning 50° - 60°<br>Final rinse 55° - 65° |
| sensitive utensils, cutlery, temperature-sensitive plastic and glasses | lightly adhering, fresh food remains | / Quick 45° | Extra Dry<br>Shine and Dry | **Time-optimised:**<br>Cleaning 45°<br>Intermediate rinse<br>Final rinse 55° |
| all types of dishes | cold rinsing, intermediate cleaning | / Pre Rinse | None | **Cold rinse**<br>Pre Rinse |
| - | - | / **Easy Clean** Machine Care | None | **Machine cleaning cycle 70°** |

## Programme selection

You can select a suitable programme according to the type of utensils and type of soiling.

## Information for test institutes

Test institutes receive the information for comparability tests (e.g. according to EN60436).

These are the conditions for conducting the tests, however these are not the results or consumption values.
Request by e-mail to:
dishwasher@test-appliances.com
The product number (E no.) and the production number (FD) are required which you can find on the rating plate [33] on the appliance door.

## turboSpeed 20 min. – especially quick programme with one-off preheating*

* depending on the configuration of your specific dishwasher

The dishwasher is heated up once (about 25 minutes) **and then** loaded, after which several quick wash cycles (20 minutes each) can be run one after another.

**Note:** Detergent tablets are **not** suitable for this programme, as the detergent cannot completely dissolve within the short time. For this reason, always use powder detergents and ensure that the salt and rinse aid dispensers are always filled and set to the correct value.

**Please read the instructions carefully, this programme differs from the other programmes.**

1. Switch on ON/OFF switch [1].
2. Select the programme turboSpeed 20 min.
   The symbol H (H = heating phase) flashes in the display window [4].
3. Press START button [7].
   The heating up phase of the empty dishwasher starts. If the appliance is loaded before the heating phase, the heating phase will take longer. The display window [4] shows the symbol H alternating with the remaining heating time.
4. As soon as L (L = Load) flashes, open and load the dishwasher and start the washing phase by pressing the START button [7].
   **Caution!** The interior will be hot.
   The display window [4] shows the remaining time.
5. When 00:00 appears in the display window [4] this indicates that the wash cycle has finished.
6. Remove utensils.
   **Caution!** The utensils will be hot and are susceptible to impacts!
   The symbol L flashes in the display window [4].
7. If more wash cycles are required, reload dishwasher and press the START button.
8. If no more wash cycles are required, switch off the ON/OFF switch [1].

# Additional functions

* Depending on the features of your dishwasher, you can select different additional functions 8.

## Save time (VarioSpeedPlus) *

The “Save time” function can reduce the running time by approx. 20% to 66% depending on the selected rinse programme. To obtain optimum cleaning and drying results at a reduced running time, water and energy consumption are increased.

## Half load *

If you have only a few items to wash (e.g. glasses, cups, plates), you can switch to “half load”. This will save water, energy and time. It is recommended to put a little less detergent in the detergent dispenser than for a full load.

## hygienePlus (HygienePlus) *

This function increases the temperatures and retains them for an extra long time to obtain a defined disinfection performance. Continuous use of this function increases the hygiene status. This additional option is ideal for cleaning e.g. chopping boards and baby bottles.

## intensiveZone *

Perfect for a mixed load. You can wash very soiled pots and pans in the lower basket together with normally soiled utensils in the upper basket. The spray pressure in the lower basket is intensified, the rinsing temperature is increased slightly.

## extraDry *

An increased temperature during the final rinse and an extended drying phase ensure that even plastic parts dry better. There is a slight increase in the energy consumption.

## Shine and Dry *

By increasing the amount of water during the rinse cycle and extending the drying phase, stains are prevented and the drying result is improved. There is a slight increase in the energy consumption. Rinse aid is recommended for the high gloss drying function (even when using combination detergents).

## Energy Save *

The “Energy Save” function can be used to reduce water and energy consumption. The running time is extended for optimum cleaning and drying results.

# Operating the appliance

## Programme data

The programme data (consumption values) can be found in the quick reference guide. They refer to normal conditions and the set water hardness value H:04. Different influencing factors such as water temperature or line pressure may result in deviations.

## Changing the settings

The dishwasher has been preset with certain settings for your convenience. You can change these factory settings.

**Here's how to change the settings:**

1. Switch on ON/OFF switch [1].
2. Press and hold the **setup 3 sec.** button for 3 seconds.
   In the display window [4] you will see H:0... and **set**.
3. Press the **setup 3 sec.** button to access the individual settings.
4. Adjust the setting using the buttons **-** **and +** [5].
5. Press and hold the **setup 3 sec.** button for 3 seconds.

The chosen setting has now been stored in your dishwasher.

**Tip:** If you want to change a number of settings, first make all your changes one after another. Then press the **setup 3 sec.** button for 3 seconds. All the settings will then be stored in the dishwasher.

## AquaSensor *

* depending on the features of your dishwasher

The Aqua sensor is an optical measuring device (light barrier) which measures the turbidity of the rinsing water.

The AquaSensor is used according to the programme. If the AquaSensor is active, "clean" rinsing water can be transferred to the next rinse bath and water consumption can be reduced by 3–6 litres. If the turbidity is greater, the water is drained and is replaced with fresh water. In the automatic programmes the temperature and running time can also be adjusted to the degree of soiling.

## Sensor setting

In its automatic programmes the appliance uses sensors to optimise their operation. The sensors adjust the strength of the automatic programmes according to the amount and type of soiling. You can choose from three levels of sensitivity for the sensors.

**Sensor setting SE:00:** This setting is ideal for a mixed load and heavily soiled utensils, but it also saves energy and water.

**Sensor setting SE:01:** This setting adjusts the programme strength for the effective removal of food remnants, even if the amount of soiling is low. The energy and water consumption is adjusted accordingly.

**Sensor setting SE:02:** This setting adjusts the programme strength for difficult conditions of use, for example firmly dried on food remnants. This setting is recommended if you are using biological or eco detergents which contain smaller quantities of active agents. The energy and water consumption is adjusted accordingly.

## ExtraDry

The final rinse uses a higher temperature which improves the drying result (be careful if you have delicate tableware). The running time may increase slightly. You can switch the function ExtraDry on d:01 or off d:00.

**Note:** When ExtraDry function is switched on, Eco drying is deactivated.

## Auto Power Off (Automatic switch off after end of programme)

To save energy, the dishwasher is switched off 1 minute after the programme ends. You can also change this setting.

**Possible settings are:**

- P:00: The dishwasher does not switch off automatically.
- P:01: The dishwasher switches off after 1 minute.
- P:02: The dishwasher switches off after 2 hours.

**Note:** Note that with the settings P:01 and P:02 the interior lighting [20] is switched off. To activate the interior lighting, press the ON/OFF switch [1].

## EmotionLight (Interior lighting) *

* depending on the configuration of your specific dishwasher

EmotionLight [20] is the interior lighting for your dishwasher. You can switch the interior lighting on E:01 or off E:00.

### Notes

- Depending on the setting of AutoPowerOff, the interior lighting is either switched on or off.
- Note that when the appliance is switched on and the door is open, the interior lighting will automatically be switched off after 1 hour.

## Changing start programme

The Eco 50° programme for environmentally friendly operation is always preselected when the appliance is switched on. You can change the “Start programme” setting. With the setting SP:00, the most recently selected programme will always appear when the appliance is switched on.

## Tone volume

Whenever you switch the dishwasher on or off, a signal sounds. You can adjust the tone volume from SL:00 - SL:03.

## Button volume

When you are operating the dishwasher, a signal sounds whenever a button is pressed. You can adjust the volume of the tone from bL:00 - bL:03. If the signal tone is annoying, set the value to bL:00 (button volume off).

## Eco drying

If you have selected the Eco 50° programme, the door opens automatically when the programme ends. This ensures a particularly economical drying result.You can switch Eco drying on o:01 or off o:00.

### Notes

- Eco drying is activated only in conjunction with the Eco 50° programme.
- Eco drying is deactivated when
  - ExtraDry is switched on.
  - The Eco 50° programme has been selected in conjunction with one or more additional functions.
  - The button lock has been activated.

## Factory setting

You can reset all settings to the factory setting.

## Switching on the appliance

1. Turn tap fully on.
2. Switch on ON/OFF switch [1]. The Eco 50° programme has been preset for environmentally friendly operation whenever the appliance starts. This programme remains selected if no other programme button [2] is pressed.
3. Press START button [7].

Programme sequence starts.

### Note:

For ecological reasons the Eco 50° programme is preset whenever the appliance starts. This conserves environmental resources and not least saves you money.
**The Eco 50° programme is a particularly environmentally friendly programme. According to EU regulation 1016/2010 it is the "Standard programme" which is the most efficient standard cleaning cycle for cleaning normally soiled utensils in terms of the combined energy and water consumption for cleaning these types of utensils.**

**Programme turboSpeed 20 min:**

When the START [7] button is pressed for the first time the dishwasher will begin its heating up phase (about 25 minutes depending on the initial situation). After the dishwasher has been opened, loaded and closed, the washing phase (20 minutes) starts when the START button [7] is pressed for a second time.

## Remaining running time display

When the programme is selected, the remaining programme time is indicated in the display window [4].

The running time is determined during the programme by the water temperature, the quantity of dishes as well as the degree of soiling and may vary (depending on the selected programme).

## Time preselection *

* depending on the configuration of your specific dishwasher

You can delay the start of the programme by up to 24 hours.

**Here's how to set up the delay:**

1. Switch on ON/OFF switch [1].
2. Press the timer programming button [6] **-** or **+**.
   The display window [4] shows 00h:00m.
3. Keep pressing the timer programming button [6] **-** or **+** until the desired time is displayed.
4. Press START button [7].
   The delay timer has been activated.
5. To clear the specified delay, press the button [6] **-** or **+** repeatedly until the display window [4] shows 00h:00m.

## Programme end

The programme has finished when the value 00h:00m appears in the display window [4].

**The following applies to turboSpeed 20 min:**

When 00:00 appears in the display window [4] this indicates that the wash cycle has finished. When you open the dishwasher door the symbol L will appear in the display window. If no further wash cycles are required, switch off the dishwasher with the ON/OFF switch [1].

## Switching off the appliance

**Shortly after the end of the programme:**

1. Switch off ON/OFF switch [1].
2. Turn off water supply (does not apply to appliances with Aqua-Stop).
3. Remove the utensils when they have cooled down.

**About the Eco drying function:**
When Eco drying is activated in the Eco 50° programme, the door opens automatically when the programme ends. This ensures the best possible drying result. Low amounts of steam may occur. **If you install the appliance under a worktop, fit the supplied steam protection film *** (follow the procedures in the installation instructions). The steam protection film protects sensitive fitted furniture and worktops from damage by water vapour. **Before opening the appliance, leave it to cool down for a while in the remaining programmes when the programme ends.**

In the case of the turboSpeed 20 min programme, don't switch the machine off until no further washing cycles are to follow.

## Interrupting the programme

**Caution!**
Expansion (overpressure) may cause the appliance door to jump open and/or water to escape! If the door was opened on an appliance which has a hot water connection or is heated, always leave the door ajar for several minutes and then close it.

1. Switch off ON/OFF switch [1]. The LEDs go out. The programme is saved.
2. Switch on the ON/OFF switch [1] again to continue the programme.

## Terminating the programme (Reset)

1. Press the START button [7] and hold it down for about 3 seconds. The value 00h:01m appears in the display window [4]. The programme duration is about 1 minute. The value 00h:00m appears in the display window [4].
2. Press the ON/OFF switch [1].

## Changing the programme

When the START button [7] has been pressed, the programme cannot be changed. The only way a programme can be changed is by Cancel programme (Reset).

# Cleaning and maintenance

A regular inspection and maintenance of your machine will help to prevent faults. This saves time and prevents problems.

## Overall status of the dishwasher

*The interior of your dishwasher is predominantly self-cleaning. In order to remove deposits, your dishwasher automatically changes the running of the programme (such as by increasing the cleaning temperature) at certain intervals. This will lead to higher consumption values when running this programme.

*Depending on the features of your dishwasher

**If you should find deposits in the interior of the dishwasher in spite of this, remove these deposits as follows:**

1. Fill the detergent dispenser [31] with detergent.
2. Select the programme with the highest temperature.
3. Start the programme without dishes.

**Warning**
**Health hazard due to detergents containing chlorine!**
Always use chlorine-free detergents.

### Notes

- Only clean the appliance with special detergents/appliance cleaners which are suitable for use with dishwashers.
- Regularly wipe the door seals using a damp cloth and a little washing-up liquid. This will keep the door seal clean and hygienic.
- Leave the door open slightly if the appliance will not be used for a while. This will prevent an unpleasant odour from developing.
- Never clean the dishwasher using a steam cleaner. The manufacturer is not liable for any consequential damage.
- Wipe the front of the dishwasher and the control panel regularly using a damp cloth and a little washing-up liquid.
- Do not use sponges with a rough surface or abrasive detergents. These could scratch the surface.
- For dishwashers with a stainless steel front, avoid using sponge cloths, or rinse these thoroughly several times before using them for the first time. This will prevent corrosion.

## Machine Care *

Machine Care used in combination with commercially available machine cleaning detergent is a suitable programme for cleaning your dishwasher. Deposits such as grease and limescale can cause your dishwasher to malfunction. In order to avoid such faults and to reduce the development of odours, we recommend cleaning the dishwasher at regular intervals.

* As soon as the Machine Care display lights up in the control panel, or you are advised to do so on the front display, run the Machine cleaning programme Machine Care **without** loading any tableware. After you have run the Machine Care the display in the control panel will go out.

If your dishwasher does not have a reminder function, follow the instructions for use on the machine cleaning detergents.

### Notes

- Remove any coarse soiling in the interior using a damp cloth.
- Run the programme without dishes, and in combination with a machine cleaning detergent.
- Use a special machine cleaning detergent, and not dishwasher detergent.
- Observe the safety instructions and the instructions for use on the machine cleaning detergent packaging.
- *After three rinse cycles, the display in the control panel will go out automatically, even if you have not run the Machine cleaning cycle programme.

* depending on the features of your dishwasher

## Special salt and rinse aid

Top up the salt and/or rinse aid as soon as either of the refill indicators on the control panel [11] or [9] lights up.

## Filters

The filters [27] keep large foreign objects in the rinsing water away from the pump. hese foreign objects may occasionally block the filters.

The filter system consists of

- a coarse filter
- a flat fine filter
- a microfilter

1. After each washing cycle check the filters for residue.
2. Unscrew filter cylinder as illustrated and take out filter system.

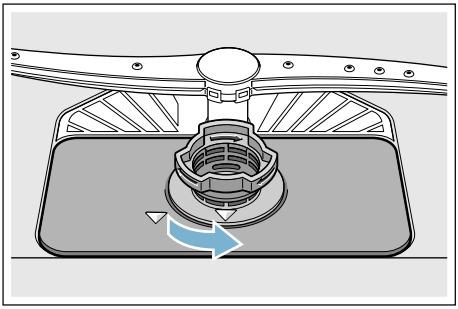

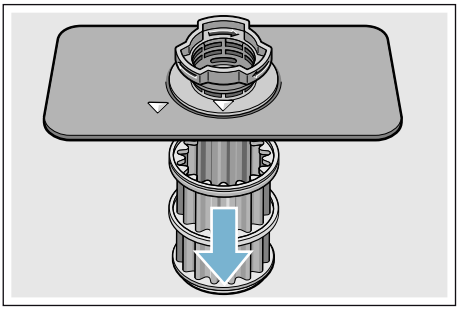

3. Remove any residue and clean filters under running water.
4. Re-install filter system in reverse sequence and ensure that the arrow marks are opposite each other after closing the filter system.

## Spray arms

Limescale and contaminants in the rinsing water may block nozzles and bearings on the spray arms [23] and [25].

1. Check outlet nozzles on the spray arms for blockages.
2. Unscrew the upper spray arm [23] (1) and remove downwards (2).
3. Remove the lower spray arm [25] upwards.

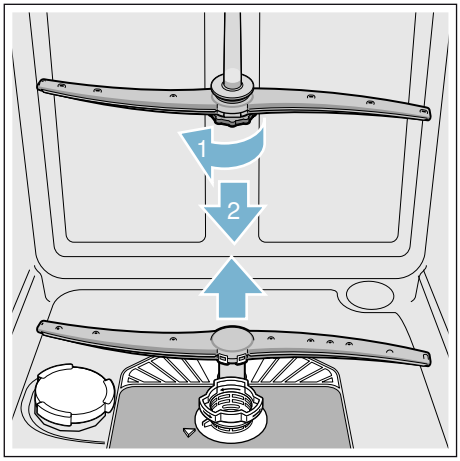


4. Clean spray arms under running water.
5. Re-engage or screw on spray arms.

# Fault, what to do?

Experience has shown that you can rectify most faults which occur in daily operation yourself. This ensures that the appliance is quickly available to you again. In the following overview you can find possible causes of malfunctions and helpful information for rectifying them.

**Note:** If the appliance stops during dishwashing or does not start for no obvious reason, first run the Abort programme function (Reset)
→ *"Operating the appliance" on page 31.*

**Warning**

**Improper repairs or use of non-original spare parts may cause considerable damage and put the user at considerable risk!**
Always have repairs carried out by technicians. If a component has to be replaced, always use original spare parts.

## Waste water pump

Large food remnants or foreign objects which were not captured by the filters may block the waste water pump. The rinsing water will then be above the filter.

**Warning**
**Danger of cutting!**
Sharp and pointed objects or glass fragments may block the waste water pump.
Always carefully remove foreign objects.

**Clean the waste water pump as follows:**

1. Disconnect the dishwasher from the power supply.
2. Take out top basket [22] and bottom basket [29].
3. Remove the filters [27].
4. Scoop out water, use a sponge if required.
5. Prise off the pump cover (as shown) using a spoon. Grip the pump cover by the crosspiece and lift diagonally inwards (1). Remove cover completely.

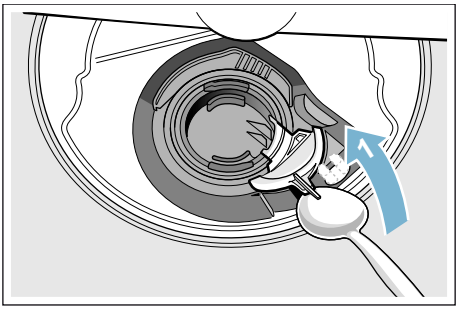


6. Check impeller wheel and remove any foreign objects.
7. Place pump cover in the original position (2) and press down until it engages (3).

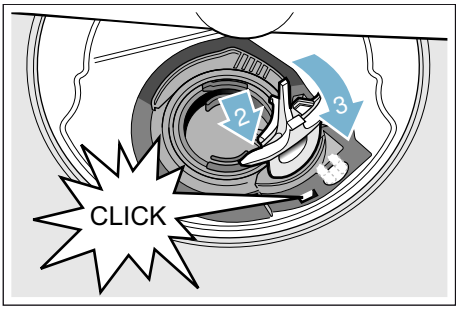


8. Install filters.
9. Re-insert baskets.

## Fault table

| Fault | Reason | Remedial action |
|---|---|---|
| “Check water supply” display lights up. | Supply hose kinked. | Install supply hose without kinks. |
| | Water supply turned off. | Turn on water supply. |
| | Water supply jammed or calcified. | Turn on water supply.<br>Flow rate must be at least 10 l/min. when water supply is open. |
| | Filter in the water supply blocked. | Switch off the appliance and pull out the mains plug. Turn off water supply.<br>Unscrew water connection.<br> 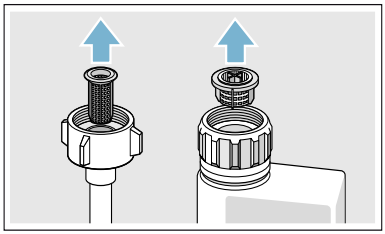 <br>Clean filter in the supply hose. Screw water connection on again. Check for leaks. Reconnect power supply. Switch on the appliance. |
| Fault code E:07 is lit. | Intake opening (on right inside of appliance) covered by utensils. | Arrange utensils so that the intake opening is not obstructed. |
| Fault code E: 12 is lit. | Heating element calcified or soiled. | Clean appliance with dishwasher cleaning agent or descaler. Operate the dishwasher with water softening system and check the setting.→ *"Water softening system/special salt" on page 15* |
| Fault code E: 14 is lit. | Water protection system activated. | Turn off water supply.<br>Call customer service and quote the fault code. |
| Fault code E: 15 is lit. | | |
| Fault code E: 16 is lit. | Constant water supply. | |
| Fault code E:22 is lit. | Filters 27 are soiled or blocked. | Clean filters. → *"Filters" on page 37* |

*Depending on the features of your dishwasher

| Fault | Reason | Remedial action |
|---|---|---|
| Fault code E:24 is lit. | Waste-water hose kinked or blocked. | Install hose without kinks, remove any residue. |
| | Siphon connection still sealed. | Check connection to siphon and open if required. |
| | Cover on the waste water pump loose. | Lock cover correctly. ⟶ *"Waste water pump" on page 39* |
| Fault code E:25 is lit. | Waste water pump blocked or cover on the waste water pump is not locked in position. | Clean pump and lock cover correctly. ⟶ *"Waste water pump" on page 39* |
| Fault code E:27 is lit. | Mains voltage too low. | No appliance fault, have the mains voltage and electrical installation checked. |
| A different fault code is indicated on the digital display. (E:01 to E:30) | A technical fault has probably occurred. | Switch off the appliance with the ON/OFF switch [1]. After a short time restart the appliance. If the problem recurs, turn off water supply and pull out the mains plug. Call customer service and quote the fault code. |
| L or H appears on the digital display [4]. * | Not a fault! | See turboSpeed 20 min. in the chapter "Overview of programmes". * |
| Refill indicator for salt [11] and/or rinse aid [9] is lit. | No rinse aid. | Refill rinse aid. |
| | No salt. | Refill with special salt. |
| | Sensor does not detect salt tablets. | Use different special salt. |
| Refill indicator for salt [11] and/or rinse aid [9] is not lit. | Refill indicator switched off. | Activation/deactivation (see chapter "Water softening system/Special salt" ⟶ *Page 15* or "Rinse aid" ). |
| | There is still enough special salt/rinse aid available. | Check refill indicator, levels. |
| Water is left in the appliance at the end of the programme. | Filter system or area under the filters [27] is blocked. | Clean filters and area underneath. |
| | Programme has not yet finished | Wait until programme ends or reset. |

*Depending on the features of your dishwasher

| Fault | Reason | Remedial action |
|---|---|---|
| Utensils not dry. | Not enough rinse aid in the dispenser, or none at all. | Refill rinse aid. |
| | Programme without drying was selected. | Select programme with drying. ⟶ *"Overview of programmes" on page 27* |
| | Water collecting in depressions on the utensils and cutlery. | Arrange utensils in a sloping position, arrange affected utensils as sloping as possible. 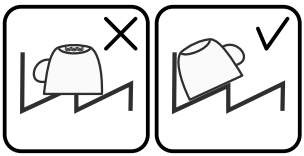 |
| | The combined detergent used has a poor drying performance. | Use different combination detergent with better drying performance. Use of rinse aid also improves the drying performance. |
| | ExtraDry to increase drying not activated. | Activate ExtraDry. ⟶ *"Operating the appliance" on page 31* |
| | Utensils were removed too early or drying process had not ended yet. | Wait until the programme ends, or wait until 30 minutes after the end of the programme before removing the utensils. |
| | The eco rinse aid used has a limited drying performance. | Use a proprietary rinse aid. Eco products may have limited effectiveness. |
| | Door does not open automatically at the end of the Eco 50° programme. Door gap is not set correctly. | Set the door correctly with the aid of the installation instructions so that the door gap is at least 70 mm - 100 mm. |
| Plastic utensils not dry. | Special properties of plastic. | Plastic has a lower heat storage capacity and therefore dries less well. |
| Cutlery not dry. | Cutlery not arranged properly in the cutlery basket. | Separate cutlery if possible, prevent contact points. |
| | Cutlery not arranged properly in the cutlery drawer. | Arrange cutlery properly and separate if possible. |
| Appliance interior wet after wash cycle. | No appliance fault. | On account of the “Condensation drying” principle, water droplets are physically induced and required in the container. The humidity in the air condenses on the inner walls of the dishwasher, drains and is pumped out. |

*Depending on the features of your dishwasher

| Fault | Reason | Remedial action |
|---|---|---|
| Food remnants on the utensils. | Utensils placed too closely together, utensils basket overfilled. | Arrange utensils with adequate clearance between them ensuring that the spray jets can reach the surface of the utensils. Prevent contact points. |
| | Spray arm rotation obstructed. | Arrange utensils so that the spray arm can rotate without obstruction. |
| | Spray arm nozzles are blocked. | Clean the spray arm nozzles. ⟶ *"Cleaning and maintenance" on page 35* |
| | Filters [27] dirty. | Clean filters. ⟶ *"Cleaning and maintenance" on page 35* |
| | Filters [27] inserted incorrectly and/or not engaged. | Insert and engage filters correctly. |
| | Wash programme too weak. | Select a more intensive wash programme. Increase sensitivity of the sensors. |
| | Utensils precleaned too intensely; sensors therefore decide on weak programme sequence. Stubborn soiling cannot be completely removed. | Do not prerinse utensils. Remove only large food remnants. Increase sensitivity of the sensors. Recommended programme Eco 50° or Intensive. |
| | Tall narrow receptacles in corner areas are not rinsed adequately. | Do not place hollow receptacles too obliquely and do not place in the corner area. |
| | Top basket [22] on right and left not set to same height. | Set top basket to same height using side levers. |

*Depending on the features of your dishwasher

| Fault | Reason | Remedial action |
|---|---|---|
| Detergent residue | Detergent dispenser cover [31] blocked by utensils and therefore does not open fully. | Utensils must not be placed above the tablet collecting tray [24]. These may block the lid of the detergent dispenser and prevent it from opening fully.<br>⟶ *"Upper basket" on page 19*<br>Do not place utensils or fragrance dispenser in the tablet collecting tray. |
| | Detergent dispenser cover [31] blocked by the tablet. | Tablet must be inserted flat and not upright. |
| | Tablets used in the quick or short programme.<br>Dissolving time of the detergent is not reached in the selected short programme. | Dissolving time of tablets too long for a quick or short programme.<br>Use a detergent powder or select a more intensive programme. |
| | Washing effect and dissolving performance are reduced after a prolonged storage time or detergent is very lumpy. | Change detergent. |
| Water stains on plastic parts. | Droplet formation on plastic surface is physically unavoidable. After drying, water stains are visible. | Use a more intensive programme (more water changes).<br>Arrange utensils in a sloping position.<br>Use rinse aid.<br>If required, increase softening setting. |
| Washable or water-soluble coatings in the container or on the door. | Detergent substances are deposited. These coatings cannot usually be removed with chemicals (appliance cleaner, ...). | Change detergent brand.<br>Clean appliance mechanically. |
| | If there is a “white coating” on the container floor, the water softening system has been set marginally. | Increase softening setting and change detergent if required. |
| | Salt dispenser cover [26] not closed. | Close salt dispenser cover correctly. |
| | Only for glasses: Initial glass corrosion – can only apparently be wiped off. | See “Glass and utensil damage”<br>⟶ *Page 18*. |

*Depending on the features of your dishwasher

| Fault | Reason | Remedial action |
|---|---|---|
| White, stubborn coatings; limescale on the utensils, container or door. | Detergent substances are deposited. These coatings cannot usually be removed with chemicals (appliance cleaner, ...). | Change detergent brand.<br>Clean appliance mechanically. |
| | Hardness range incorrectly set or water hardness greater than 8.9 mmol/l. | Set water softening system according to instructions for use or top up salt. |
| | 3 in 1 detergent or bio/eco detergent not effective enough. | Set water softening system according to instructions for use or use separate detergents (proprietary detergent, salt, rinse aid). |
| | Underdosing of detergent. | Increase detergent dosage or change detergent. |
| | Too gentle wash programme selected. | Select a more intensive wash programme. |
| Tea or lipstick residue on the utensils. | Too low rinsing temperature. | Select programme with higher washing temperature. |
| | Too little or unsuitable detergent. | Use suitable detergent at correct dosage. |
| | Utensils precleaned too intensely; sensors therefore decide on weak programme sequence. Stubborn soiling cannot be completely removed. | Do not prerinse utensils. Remove only large food remnants.<br>Increase sensitivity of the sensors.<br>Recommended programme Eco 50° |
| Coloured (blue, yellow, brown), difficult to remove to non-removable coatings in the appliance or on stainless steel utensils. | Film formation consisting of ingredients from vegetables (e.g. cabbage, celery, potatoes, noodles, ...) or the tap water (e.g. manganese). | Can be partly removed with machine cleaner or by mechanical cleaning. Coatings are harmless. |
| | Film formation caused by metallic components on silver or aluminium utensils. | Can be partly removed with machine cleaner or by mechanical cleaning. |
| Coloured (yellow, orange, brown), easily removable deposits inside the appliance (mainly in the floor area). | Film formation consisting of ingredients from food remnants and substances from the tap water (limescale), “soapy” | Check function of the water softening system (refill with salt) or, if using combined detergents (tablets), activate water softening system. |
| Discolouration of the plastic parts inside the appliance. | Plastic parts inside the appliance may become discoloured during the service life of the dishwasher. | Discolouration is normal and will not impair the function of the dishwasher. |

*Depending on the features of your dishwasher

| Fault | Reason | Remedial action |
|---|---|---|
| Plastic parts discoloured. | Too low rinsing temperature. | Select programme with higher washing temperature. |
| | Utensils precleaned too intensely; sensors therefore decide on weak programme sequence. Stubborn soiling cannot be completely removed. | Do not prerinse utensils. Remove only large food remnants.<br>Increase sensitivity of the sensors.<br>Recommended programme Eco 50° |
| Removable streaks on glasses, glasses with metallic appearance and cutlery. | Too much rinse aid. | Set rinse aid amount to lower setting. |
| | No rinse aid added or setting too low. | Add rinse aid and check dosage (recommended setting 4–5). |
| | Detergent residue in the final rinse. Detergent dispenser cover blocked by utensils (cover does not open fully). | Detergent dispenser cover must not be obstructed by utensils.<br>Do not place utensils or fragrance dispenser in the tablet collecting tray. |
| | Utensils precleaned too intensely; sensors therefore decide on weak programme sequence. Stubborn soiling cannot be completely removed. | Do not prerinse utensils. Remove only large food remnants.<br>Increase sensitivity of the sensors.<br>Recommended programme Eco 50° |
| Initial or existing, irreversible clouding of glass. | Glasses not dishwasher-proof, only suitable for dishwasher. | Use dishwasher-proof glasses.<br>Avoid long steam phase (standing time after wash cycle ends).<br>Use wash cycle at lower temperature.<br>Set water softening system according to the water hardness (if required one setting lower).<br>Use detergent with glass protection component. |
| Rust spots on the cutlery. | Cutlery is not sufficiently rust-resistant. Knife blades are frequently more severely affected. | Use rust-resistant cutlery. |
| | Cutlery will also rust if rusting parts are rinsed at the same time (pan handles, damaged utensil baskets, etc.). | Do not wash rusting parts. |
| | Salt content in the rinsing water too high, as salt dispenser lock not fastened firmly or salt was spilled while being refilled. | Fasten salt dispenser lock firmly or remove spilled salt. |

*Depending on the features of your dishwasher

| Fault | Reason | Remedial action |
|---|---|---|
| Appliance cannot be switched on or operated. | Malfunction. | Disconnect appliance from the power supply; pull out the mains plug or switch off the fuse. Wait at least 5 seconds, then connect the appliance to the power supply. |
| Appliance does not start. | The mains fuse has tripped. | Check mains fuse. |
| | Power cord not inserted. | Ensure that the power cord is plugged all the way into the back of the appliance and into the socket. Check that the socket functions. |
| | The appliance door has not been shut properly. | Close the door. |
| Programme starts automatically. | You did not wait until programme ended. | Perform reset. |
| Door does not open automatically at the end of the Eco 50° programme. | Eco drying deactivated. | Activate Eco drying. ⟶ *"Operating the appliance" on page 31* |
| | Button lock/childproof lock is activated.* | Deactivate button lock/childproof lock. ⟶ *"Operating the appliance" on page 31** |
| | Eco 50° programme not selected. | Select Eco 50° programme. |
| | Additional functions selected. | Deselect additional functions. |
| | ExtraDry is switched on. | Switch off ExtraDry. |
| | Door is not set correctly. | Set the door correctly with the aid of the installation instructions so that the door gap is at least 70 mm - 100 mm. |
| | Wrong screws used to adjust the door gap. If excessively long screws are screwed in, they may deactivate Eco drying. | To adjust the door gap, use screws which have a max. size of ø 4X30 (included in the product package, see installation instructions). |
| | Door and door seal dirty. | Clean door and door seal with a damp cloth and a little washing-up liquid. |
| | Safety device switches the Eco drying function off. A technical fault has probably occurred. | Call the after-sales service. |
| The door is difficult to open. | Child-proof lock is activated. | Deactivate childproof lock. |

*Depending on the features of your dishwasher

| Fault | Reason | Remedial action |
|---|---|---|
| Door cannot be closed. | Door lock has been activated. | Close door with increased force. |
| | Door cannot be closed due to installation. | Check appliance installation: Door or attached parts must close without obstruction. |
| Cover on the detergent dispenser cannot be closed. | Detergent dispenser or cover guide blocked by sticky detergent residue | Remove detergent residue. |
| Detergent residue in the detergent dispenser 31 or in the tablet collecting tray 24. | Spray arms blocked by utensils, therefore detergent is not rinsed out. | Ensure that the spray arms can rotate freely. |
| | The detergent dispenser was damp when filled. | Pour detergent into the dry detergent dispenser only. |
| Appliance stops in the programme or programme is interrupted. | Door not closed properly. | Close the door. |
| | Do not place utensils or fragrance dispenser in the tablet collecting tray.<br>Top basket presses against the door and prevents door from being closed securely. | Check whether rear panel is being pressed in, e.g. by socket or by hose holder which has not been removed. |
| | Power and/or water supply interrupted. | Restore power and/or water supply. |
| Filling valves making striking noises. | Depends on domestic installation, as no appliance fault. No effect on appliance function. | No remedial action possible. |
| Knocking or rattling noise. | Spray arm strikes the utensils, utensils not positioned correctly. | Position utensils so that the spray arms do not strike the utensils. |
| | If there is a low load, the water jets strike the washing tank directly. | Load the appliance with more utensils or distribute the utensils more evenly in the dishwasher. |
| | Light utensils move during the wash cycle. | Arrange light utensils securely. |
| Unusual foam formation. | Hand washing-up liquid in the rinse aid dispenser. | Immediately refill rinse aid dispenser with rinse aid. |
| | Rinse aid spilled. | Remove rinse aid with a cloth. |

*Depending on the features of your dishwasher

# Customer service

If you are unable to rectify the fault, please contact your customer service. We will always find an appropriate solution in order to avoid unnecessary visits by engineers. Contact information for your nearest customer service can be found on the back of these instructions for use or on the enclosed customer service list. When calling, please state the appliance number (E-Nr. = 1) and the production number (FD = 2) which can be found on the rating plate 33 on the appliance door.

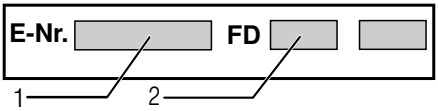


**Trust the expertise of the manufacturer.** Contact us for assistance. You can therefore be sure that the repair is carried out by trained service technicians who carry original spare parts for your domestic appliances.

# Installation and connection

The dishwasher must be connected correctly, otherwise it will not function properly. The specifications for the inlet and outlet as well as the electrical connected loads must correspond with the required criteria as specified in the following paragraphs or in the installation instructions.

**Install the appliance in the correct sequence:**

1. Checking appliance on delivery
2. Installation
3. Drainage connection
4. Drinking water connection
5. Electrical connection

## Contents of package

If you have any complaints, contact the dealer from whom you purchased the appliance or our customer services.

- Dishwasher
- User manual
- Installation instructions
- Quick reference guide*
- Warranty*
- Installation materials
- Steam guard plate*
- Rubber apron*
- Power cord

* depending on the features of your dishwasher

## Safety instructions

Please follow the safety instructions under → *"Installation" on page 6*.

## Delivery

Your dishwasher has been checked thoroughly in the factory to ensure that it is in working order. This may cause small water stains. These will disappear after the first wash cycle.

## Technical specifications

- **Weight:**
  up to 60 kg
- **Voltage:**
  220–240 V, 50 Hz or 60 Hz
- **Connected load:**
  2000 - 2400 W.
- **Fuse:**
  10/16 A (UK 13 A).
- **Power input:**
  off mode (Po)* 0.50 W.
  left on mode (Pl)* 0.50 W.
  *according to regulations (EU) nos. 1016/2010 and 1059/2010.
  Additional functions and settings may increase the power input.
- **Water pressure:**
  at least 0.05 MPa (0.5 bar), maximum 1 MPa (10 bar).
  At a higher water pressure: connect pressure-reducing valve ahead.
- **Inlet rate:**
  minimum 10 litres/minute
- **Water temperature:**
  cold water.
  Hot water:
  Maximum temperature 60 °C.
- **Capacity:**
  12–15 place settings (depending on the features of your dishwasher).

## Installation

The required installation dimensions can be found in the installation instructions. Level the appliance with the aid of the height-adjustable feet. Ensure that the appliance is situated securely on the floor.

- A built-under or integrated appliance which is installed subsequently as a free-standing appliance must be secured to prevent it from overturning, e.g. by screwing it to the wall or by installing it under a continuous worktop which is screwed to adjacent cupboards.
- The appliance can easily be installed in a fitted kitchen between wooden and plastic walls.

## Drainage connection

1. The required work sequence can be found in the installation instructions. If required, fit a siphon with an drainage connection.
2. Connect the waste-water hose to the drainage connection of the siphon with the enclosed parts.
   Ensure that the drainage hose is not kinked, crushed or twisted and that there is no cover plate in the drainage to prevent the waste water from flowing out!

## Drinking water connection

1. Fasten the drinking water connection to the tap according to the installation instructions using the enclosed parts.
   Ensure that the drinking water connection is not kinked, crushed or twisted.
2. When replacing the appliance, always use a new water supply hose.

**Water pressure:**
at least 0.05 MPa (0.5 bar), maximum 1 MPa (10 bar).
At a higher water pressure:
connect pressure-reducing valve ahead.
**Inlet rate:**
minimum 10 litres/minute
**Water temperature:**
cold water.
Hot water:
Maximum temperature 60 °C.

## Hot water connection *

* depending on the features of your dishwasher

The dishwasher can be connected to cold or hot water up to max. 60°C. Connection to hot water is recommended if the hot water can be supplied by energetically favourable means and from a suitable installation, e.g. solar heating system with circulation line. This will save energy and time. The “Hot water” setting allows you to adjust your dishwasher optimally to operate with hot water. It is recommended to have a water temperature (temperature of the incoming water) of at least 40 °C and no more than 60 °C. It is not recommended to connect the appliance to hot water if the water is supplied from an electric boiler.

**Here’s how to change the hot water setting:**

1. Switch on ON/OFF switch [1].
2. Press and hold the setup 3 sec. button for 3 seconds.
   The value H:0... and set will appear in the display window [4].
3. Press the setup 3 sec. button repeatedly until the factory setting value A:00 appears in the display window [4].
4. Adjust the setting using the buttons **+ and -** [5].
5. Press and hold the setup 3 sec. button for 3 seconds.

The chosen setting has now been stored in your dishwasher.

## Electrical connection

- Connect the appliance to an alternating current only, ranging from 220 V to 240 V and 50 Hz or 60 Hz via a correctly installed socket with protective earth conductor. See rating plate for required fusing 33.
- The socket must be near the appliance and freely accessible following installation.
  If the plug is not freely accessible, an allpole disconnector with a contact opening of at least 3 mm must be fitted on the installation side to satisfy the relevant safety instructions.
- The connection may be modified by technicians only.
- A power cord extension may be purchased from customer service only.
- Use only a residual current operated circuit-breaker which features the symbol . Only this extension guarantees compliance with the currently valid regulations.
- The appliance features a water damage protection system. Please note the system will function **only** when the power supply is connected.

## Removal

**Also observe the sequence of worksteps here.**

1. Disconnect the appliance from the power supply.
2. Turn off the tap.
3. Undo the waste water and drinking water connection.
4. Loosen fastening screws for the furniture parts.
5. If fitted, remove the base panel.
6. Pull out the appliance, carefully pulling the hose behind.

## Transporting

Empty the dishwasher and secure loose parts.

**Drain the appliance according to the following steps:**

1. Turn on water supply.
2. Switch on ON/OFF switch [1].
3. Select programme with the highest temperature.
   The estimated programme duration appears in the display window [4].
4. Press START button [7].
   Programme sequence starts.
5. After about 4 minutes, press and hold the START button [7] for about 3 seconds.
   The value 00h:01m appears in the display window [4]. The programme duration is about 1 minute. The value 00h:00m appears in the display window [4].
6. Switch off ON/OFF switch [1].
7. Turn off water supply, disconnect supply hose and drain water.

**Note:** Always transport the dishwasher upright. This prevents residual water from getting into the machine's controls and causing the programme sequence to malfunction.

## Protection against frost

If the appliance is in a room where there is a risk of frost (e.g. holiday home), empty the appliance completely (see Transportation).

Subject to changes.

## AquaStop guarantee (does not apply to appliances without AquaStop)

In addition to warranty claims against the seller based on the purchase contract and in addition to our appliance warranty we will pay damages under the following conditions:

1. If our AquaStop system is defective and causes water damage, we will make good the damage for private users. To ensure water damage protection, the appliance must be connected to the power supply.
2. This liability guarantee is valid for the service life of the appliance.
3. A prerequisite for the warranty claim is that the appliance has been correctly installed and connected with AquaStop according to our instructions. This also includes the correct installation of the AquaStop extension (original accessory). Our warranty does not extend to defective feed lines or fittings up to the AquaStop connection on the tap.
4. If your appliance is fitted with AquaStop, you can leave your appliance unattended during operation and leave the tap turned on afterwards. The tap should only be turned off if you are absent from home for a prolonged period, e.g. several weeks holiday.

☎ Repair order and advice on faults.

| | | |
|---|---|---|
| GB | 0344 892 8979 | Calls from a BT landline will be charged at up to 3 pence per minute. A call set-up fee of up to 6 pence may apply. |
| IE | 01450 2655 | 0.03 € per minute at peak. Off peak 0.0088 € per minute. |
| US | 800 944 2904 | toll-free |

Contact information for all countries can be found on the enclosed customer service list.

Robert Bosch Hausgeräte GmbH
Carl-Wery-Straße 34
81739 München
Germany
www.bosch-home.com

**9001353471**
(9801) 642 MB