Register your new Bosch now:
www.bosch-home.com/welcome

Free standing cooker
HSB738354A

BOSCH

en Instruction manual

Table of contents

Intended use 4

Important safety information 4
General information 5

Causes of damage 7
Hob 7
Oven 7

Environmental protection 8
Saving energy with your oven 8
Saving energy with the hob 8
Environmentally-friendly disposal 8

Getting to know your appliance 9
The control panel 9
The timer 10
The hob 10
The oven 11
Cooling fan. 11

Accessories 12
Locking function. 12
Special accessories 13

Before using for the first time. 13
Baking out the oven. 13
Cleaning the burner caps and cups. 13
Cleaning the accessories. 13

Operating the appliance 14
Hob 14
Oven 14

Cleaning agent 15
Suitable cleaning agents 15
Surfaces in the cooking compartment 16
Keeping the appliance clean 16
Cleaning the cooking compartment 16

Rails. 17
Removing the hook-in racks. 17
Inserting the hook-in rack. 17

Appliance door 17
Removing and installing the door panels. 17
Removing and fitting the appliance door 18

Trouble shooting 19
Replacing the oven light bulb. 19

Customer service. 20

Tested for you in our cooking studio 21
Table of dishes. 21
Tips for using your appliance 22

Additional information on products, accessories, replacement parts and services can be found at **www.bosch-home.com** and in the online shop **www.bosch-eshop.com**

Intended use

Read these instructions carefully. Only then will you be able to operate your appliance safely and correctly. Retain the instruction manual and installation instructions for future use or for subsequent owners.

Check the appliance for damage after unpacking it. Do not connect the appliance if it has been damaged in transport.

Only a licensed professional may connect appliances without plugs. Damage caused by incorrect connection is not covered under warranty.

This appliance is intended for domestic use only. The appliance must only be used for the preparation of food and drink. The appliance must be supervised during operation. Only use this appliance indoors.

This appliance is intended for use up to a maximum height of 2000 metres above sea level.

This appliance is not intended for operation with an external clock timer or a remote control.

Do not use inappropriate child safety shields or hob guards. These can cause accidents.

This appliance may be used by children over the age of 8 years old and by persons with reduced physical, sensory or mental capabilities or by persons with a lack of experience or knowledge if they are supervised or are instructed by a person responsible for their safety how to use the appliance safely and have understood the associated hazards.

Children must not play with, on, or around the appliance. Children must not clean the appliance or carry out general maintenance unless they are at least 15 years old and are being supervised.

Keep children below the age of 8 years old at a safe distance from the appliance and power cable.

Always slide accessories into the cooking compartment the right way round.
→ *"Accessories" on page 12*

Close the safety valve on the gas supply line if the cooker will not be used for a prolonged period.

Important safety information

⚠ Warning – WHAT TO DO IF YOU SMELL GAS!
Escaping gas may cause an explosion.
If you smell gas or notice any faults in the gas installation:

- Immediately shut off the gas supply or close the gas cylinder valve.
- Immediately extinguish all naked flames and cigarettes.
- Do not use any light or appliance switches and do not pull any plugs out of sockets. Do not use any telephones or mobile phones within the building.
- Open windows and ventilate the room.
- Call the after-sales service or the gas supplier.

⚠ Warning – Risk of asphyxiation!
The use of a gas cooker leads to a build-up of heat, moisture and products of combustion in the room where the appliance is installed. Ensure that the installation room is well ventilated. The natural ventilation openings must be kept open or a mechanical ventilation device must be provided (e.g. an extractor hood). Intensive and persistent use of the appliance may mean that it is necessary to have additional ventilation (e.g. opening a window), or more effective ventilation (e.g. operating the existing mechanical ventilation device at a higher setting).

This appliance is approved for use with Natural and ULPG gas.

DO NOT SPRAY AEROSOLS IN THE VICINITY OF THIS APPLIANCE WHILE IT IS IN OPERATION.

THIS APPLIANCE **IS NOT TO BE INSTALLED** IN MARINE CRAFT OR IN CARAVANS.

DO NOT MODIFY THIS APPLIANCE.

SERVICING SHALL ONLY BE CARRIED OUT BY AN AUTHORISED PERSON.

General information

⚠ Warning – Risk of fire!

- A draught is created when the appliance door is opened. Greaseproof paper may come into contact with the heating element and catch fire. Do not place greaseproof paper loosely over accessories during preheating. Always weight down the greaseproof paper with a dish or a baking tin. Only cover the surface required with greaseproof paper. Greaseproof paper must not protrude over the accessories.
- Combustible objects that are left in the cooking compartment may ignite. Never store combustible items in the cooking compartment. Never open the appliance door if there is smoke inside. Switch off the appliance and unplug the mains plug or switch off the fuse in the fuse box. Shut off the gas supply.
- Hot oil and fat can ignite very quickly. Never leave hot fat or oil unattended. Never use water to put out burning oil or fat. Switch off the hotplate. Extinguish flames carefully using a lid, fire blanket or something similar.
- The hotplates become very hot. Never place combustible items on the hob. Never place objects on the hob.
- The appliance becomes very hot and flammable materials could catch fire. Never store or use flammable objects (e.g. spray cans, cleaning agents) under the appliance or in its immediate vicinity. Never place flammable items on or in the appliance.
- When gas hotplates are in operation without any cookware placed on them, they can build up a lot of heat. The appliance and the extractor hood above it may become damaged or be set on fire. Grease residue in the filter of the extractor hood may ignite. Only operate the gas burners with cookware on them.
- The rear of the appliance becomes very hot. This may cause damage to the power cables. Electricity and gas lines must not come into contact with the rear of the appliance.

⚠ Warning – Risk of burns!

- The appliance becomes very hot. Never touch the interior surfaces of the cooking compartment or the heating elements. Always allow the appliance to cool down. Keep children at a safe distance.
- Accessories and ovenware become very hot. Always use oven gloves to remove accessories or ovenware from the cooking compartment.
- Alcoholic vapours may catch fire in the hot cooking compartment. Never prepare food containing large quantities of drinks with a high alcohol content. Only use small quantities of drinks with a high alcohol content. Open the appliance door with care.
- The hotplates and surrounding area (particularly the hob surround, if fitted) become very hot. Never touch the hot surfaces. Keep children at a safe distance.
- The accessible parts become very hot when in operation. Never touch hot parts. Keep children at a safe distance.
- Empty cookware becomes extremely hot when set on a gas hotplate that is in operation. Never heat up empty cookware.

⚠ Warning – Risk of scalding!

- The accessible parts become hot during operation. Never touch the hot parts. Keep children at a safe distance.
- When you open the appliance door, hot steam may escape. Open the appliance door with care. Keep children at a safe distance.
- Water in a hot cooking compartment may create hot steam. Never pour water into the hot cooking compartment.

⚠ Warning – Risk of injury!

- Scratched glass in the appliance door may develop into a crack. Do not use a glass scraper, sharp or abrasive cleaning aids or detergents.
- Incorrect repairs are dangerous. Repairs may only be carried out, and damaged power and gas lines replaced, by an after-sales engineer trained by us. If the appliance is faulty, unplug the mains plug or switch off the fuse in the fuse box. Shut off the gas supply. Contact the after-sales service.
- The hinges on the appliance door move when opening and closing the door, and you may be trapped. Keep your hands away from the hinges.
- Faults or damage to the appliance are dangerous. Never switch on a faulty appliance. Unplug the appliance from the mains or switch off the circuit breaker in the fuse box. Shut off the gas supply. Contact the after-sales service.
- Unsuitable pan sizes, damaged or incorrectly positioned pans can cause serious injury. Observe the instructions which accompany the cookware.
- If the appliance is placed on a base and is not secured, it may slide off the base. The appliance must be fixed to the base.

⚠ Warning – Risk of tipping!

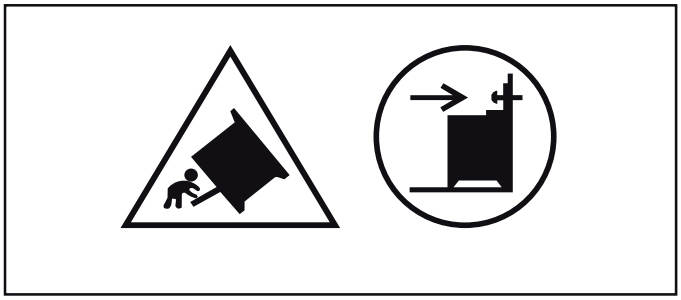

Warning: In order to prevent tipping of the appliance, this stabilizing means must be installed. Refer to the instructions for installation.

⚠ Warning – Risk of electric shock!

- Incorrect repairs are dangerous. Repairs may only be carried out and damaged power cables replaced by one of our trained after-sales technicians. If the appliance is defective, unplug the appliance from the mains or switch off the circuit breaker in the fuse box. Contact the after-sales service.
- The cable insulation on electrical appliances may melt when touching hot parts of the appliance. Never bring electrical appliance cables into contact with hot parts of the appliance.
- Do not use any high-pressure cleaners or steam cleaners, which can result in an electric shock.
- A defective appliance may cause electric shock. Never switch on a defective appliance. Unplug the appliance from the mains or switch off the circuit breaker in the fuse box. Contact the after-sales service.
- When replacing the cooking compartment bulb, the bulb socket contacts are live. Before replacing the bulb, unplug the appliance from the mains or switch off the circuit breaker in the fuse box.

⚠ Warning – Hazard due to magnetism!

Permanent magnets are used in the control panel or in the control elements. They may affect electronic implants, e.g. heart pacemakers or insulin pumps. Wearers of electronic implants must stay at least 10 cm away from the control panel.

⚠ Warning – Risk of overheating!

Covering the ventilation openings in the floor of the appliance may cause it to overheat. Always install the appliance on the feet supplied.

Causes of damage

Hob

Caution!

- Only use the burners when cookware has been placed on top. Do not heat up empty pots or pans. The saucepan base will be damaged.
- Clear up spills immediately. Use deep pots for dishes with a lot of liquid. This will prevent the food from boiling over.
- Do not use roasting dishes if they must be heated using two burners. This will cause heat accumulation. The appliance could be damaged.
- Cooking on gas burners releases extra heat and moisture. Adjacent units may become damaged over time. For long cooking times, switch on the cooker hood or ventilate the room.
- Observe the manufacturer's instructions when using special ovenware.Aluminium foil and plastic containers can melt and stick on hot burners.
- Place the pot or pan centrally over the burner. This will optimise transfer of the heat from the burner flame to the pot or ban base. The handle does not become damaged, and greater energy savings are guaranteed.
- Ensure that the gas burners are clean and dry. The burner cup and burner cap must be positioned exactly.
- Ensure that the hotplate/burner is never switched on when the hob cover is on, e.g. by children playing.

Oven

Caution!

- Accessories, foil, greaseproof paper or ovenware on the cooking compartment floor: do not place accessories on the cooking compartment floor. Do not cover the cooking compartment floor with any sort of foil or greaseproof paper. Do not place ovenware on the cooking compartment floor. This will cause heat accumulation. The baking and roasting times will no longer be correct and the enamel will be damaged.
- Inserting accessories: depending on the appliance model, accessories can scratch the door panel when closing the appliance door. Always insert the accessories into the cooking compartment as far as they will go.
- Water in a hot cooking compartment: do not pour water into the cooking compartment when it is hot. This will cause steam. The temperature change can cause damage to the enamel.
- Moist food: do not store moist food in the cooking compartment when it is closed for prolonged periods This will damage the enamel.
- Fruit juice: when baking particularly juicy fruit pies, do not pack the baking tray too generously. Fruit juice dripping from the baking tray leaves stains that cannot be removed. If possible, use the deeper universal pan.
- Cooling with the appliance door open: only allow the cooking compartment to cool when it is closed. Even if the appliance door is only open a little, front panels of adjacent units could be damaged over time.
- Heavily soiled oven seal: if the oven seal is heavily soiled, the oven door will no longer close properly when the oven is in operation. The fronts of adjacent units could be damaged. Always keep the oven seal clean.
- Oven door as a bearing surface: do not stand or place objects on the oven door when it is open. Do not hang objects on the oven door.
- Carrying the appliance: do not carry or hold the appliance by the door handle. The door handle cannot support the weight of the appliance and could break.
- Heavy accessories: do not pull out heavily laden accessories too far without first unloading them sufficiently. Heavy accessories will tip when pulled out. This causes pressure to be exerted on the shelf supports in the cooking compartment, which can damage the enamel. Relieve the strain on the accessories when they are pulled out by raising them slightly with one hand. Caution: always use an oven cloth or oven gloves when handling hot accessories.

Environmental protection

Your new appliance is particularly energy-efficient. Here you can find tips on how to save even more energy when using the appliance, and how to dispose of your appliance properly.

Saving energy with your oven

- Only preheat the oven if this is specified in the recipe or in the operating instruction tables.
- Use dark, black lacquered or enamelled baking tins. They absorb the heat particularly well.
- Open the oven door as infrequently as possible while cooking, baking or roasting.
- It is best to bake more than one cake, one after the other. The oven is still warm. This reduces the baking time for the second cake. You can also place two loaf tins next to each other.
- For longer cooking times, you can switch the oven off 10 minutes before the end of the cooking time and use the residual heat to finish cooking.

Saving energy with the hob

- Always use a saucepan which is the correct size for your food. A larger, less full saucepan requires a lot of energy.
- Always place a suitable lid on the saucepan.
- Switch to a lower heat setting in good time.
- The gas flame must always be in contact with the base of the saucepan.

Environmentally-friendly disposal

Dispose of packaging in an environmentally-friendly manner.

This appliance is labelled in accordance with European Directive 2012/19/EU concerning used electrical and electronic appliances (waste electrical and electronic equipment - WEEE). The guideline determines the framework for the return and recycling of used appliances as applicable throughout the EU.

Getting to know your appliance

Use this section to familiarise yourself with your new appliance. You will find information about the control panel and hob, as well as the oven, types of heating and accessories.

Depending on the appliance model, individual details may differ.

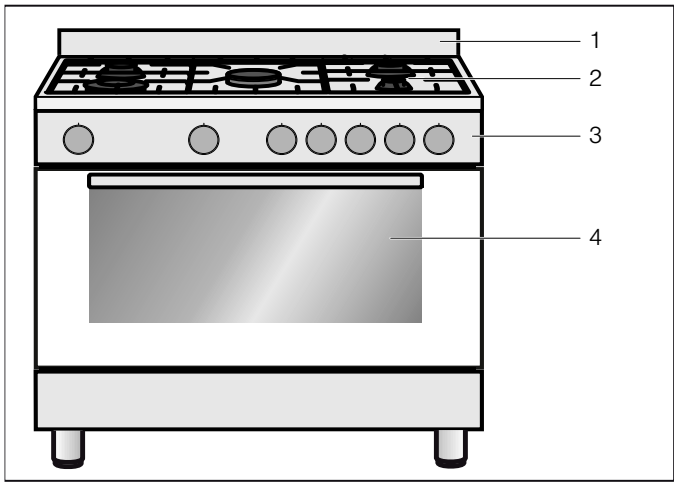

Explanation	
1	Splatter guard
2	Hob
3	Control panel
4	Oven

The control panel

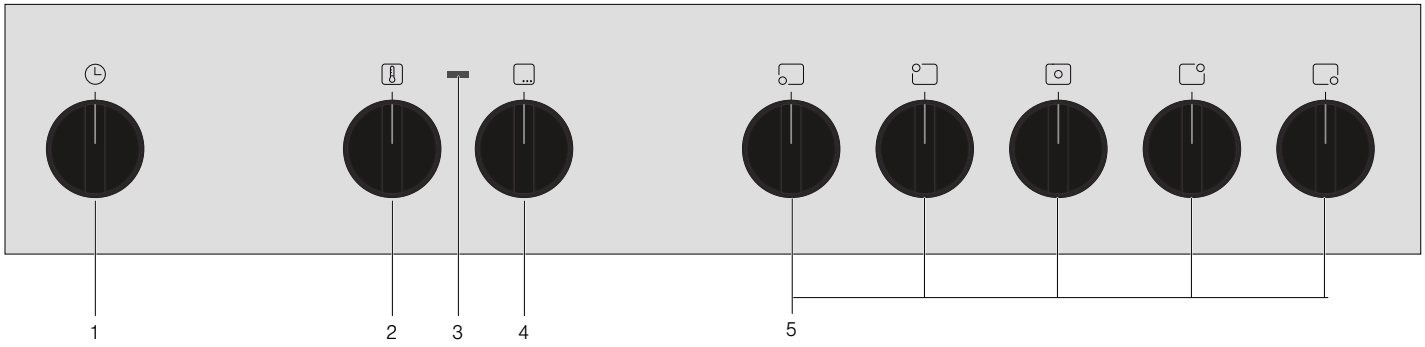

Explanation	
1	Control knob for timer
2	Control knob for oven temperature
3	Oven indicator light
4	Control knob for oven functions
5	Control knob for hotplates

The timer

You can use the timer to set a cooking time.

An audible signal sounds once the cooking time has elapsed.

Control knob for timer

Setting	Meaning
o	Off
10 - 120	Cooking time in minutes

The hob

⚠ Warning – Risk of burns!
Hot air flows out from the ventilation opening on the hob. Never touch the ventilation opening.

Please note that, in the case of appliances with a hob cover, the burners in the oven must also only be switched on if the hob cover is open.

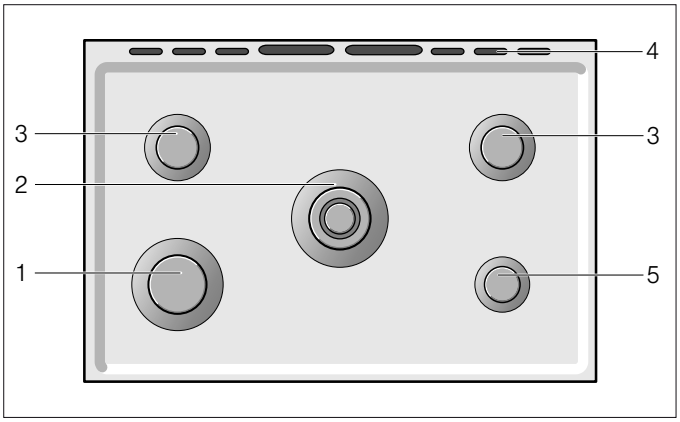

Explanation	
1	High-output burner (12.0 MJ/h)
2	Wok burner (14.0 MJ/h)
3	Standard burner (7.0 MJ/h)
4	Ventilation opening
5	Economy burner (4.0 MJ/h)

Types of gas burner

Gas burners	Pot/pan diameter
Economy burner	12 - 14 cm
Standard burner	16 - 22 cm
High output burner	18 - 26 cm
Wok burner	18 - 26 cm

Precautions for use

The following advice is intended to help you save energy and prevent pan damage:

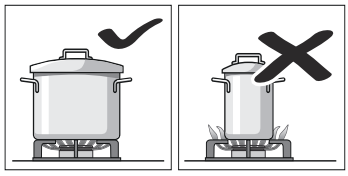

Use pans which are the right size for each burner. Do not use small pans on large burners. The flame must not touch the sides of the pan.

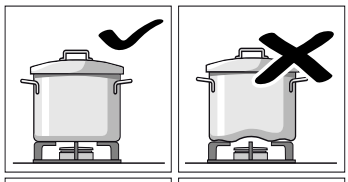

Do not use damaged pans, which do not sit evenly on the hob. Pans may tip over. Only use pans with a thick, flat base.

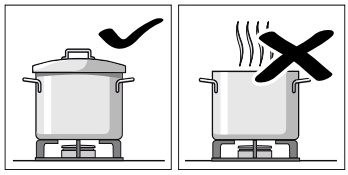

Do not cook without using a lid and make sure the lid is properly fitted. This wastes energy.

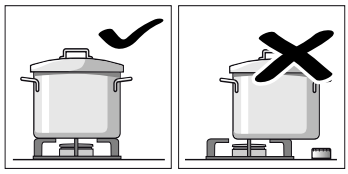

Always centre the pan over the burner, not to one side. Otherwise it could tip over. Do not place large pans on the burners near the control knobs. These may be damaged by the very high temperatures.

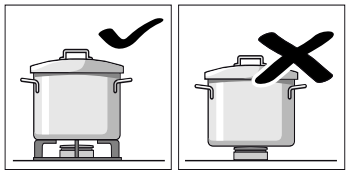

Place the pans on the pan supports, never directly on the burner.
Make sure that the pan supports and burner caps are correctly positioned before using the appliance.

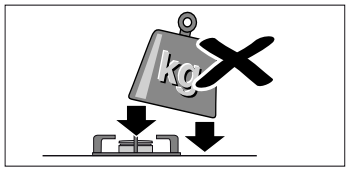

Pans should be placed on the hob carefully.
Do not strike the hob and do not place excessive weight on it.

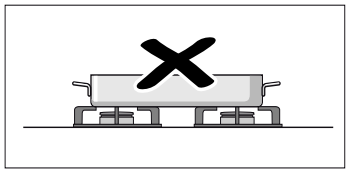

Never use two burners or heat sources to heat one single pan.
Do not use grill pans, earthenware casserole dishes, etc. for a long period of time on maximum power.

Control knob for hotplates

This control knob is used to adjust the heat setting of the gas burner hotplates.

The symbols above the control knob show you the gas burner to which the control knob belongs.

Setting	Meaning
o	Off
	Large flame, highest power
	Economy flame, lowest power

The oven

In order to operate the oven, you require two operating knobs: The function selector and the temperature selector.

Control knob for oven

Function selector

Use the function selector to set the type of heating.

	Type of heating	Use
	Hot air	For baking and cooking on one or more levels. The fan distributes the heat from the ring heating element in the back panel evenly around the cooking compartment.
	Top/bottom heating and fan	For cakes with very moist toppings. Heat is emitted evenly from the top and bottom. The fan circulates the hot air around the food.
	Top/bottom heating	For traditional baking and roasting on one level. Especially suitable for cakes with moist toppings. Heat is emitted evenly from the top and bottom.
	Bottom heating and fan	For the final baking stage (such as for moist fruit flans), for boiling down, for dishes in a bain marie. Heat is emitted from below. The fan circulates the hot air around the food.
	Hot air grill	For roasting poultry, whole fish and larger pieces of meat. The whole area below the grill element becomes hot. The fan circulates the hot air around the food.
	Full-surface grill	For grilling flat items, such as steaks or sausages, for making toast, and for au gratin dishes. The whole area below the grill element becomes hot.

Temperature selector

You can use the temperature selector to set the temperature.

Setting	Meaning
o	Off
50 - 260	Temperature range in °C

There is a limit stop between positions 260 and o. Do not turn the knob beyond this point.

Note: To defrost: Set the function selector to and the temperature selector to o.

Cooling fan

The hot air escapes via the ventilation opening. The cooling fan switches on and off as required. Caution. Do not cover the ventilation slots. Otherwise the oven will overheat.

To ensure that the cooking compartment cools down more quickly after operation, the cooling fan continues to run for a certain period afterwards.

Accessories

Your appliance is accompanied by a range of accessories. Here, you can find an overview of the accessories included and information on how to use them correctly.

Accessories	Description
	Baking and roasting shelf For ovenware, cake tins, joints, grilled items, frozen meals.
	Universal pan For moist cakes, pastries, frozen meals and large roasts. The universal pan can be used to catch dripping fat when you are grilling directly on the wire rack.
	Espresso attachment Attachment for an espresso pot; for placing on the economy burner.
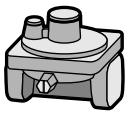	Pressure regulator Pressure regulator for natural gas mode.
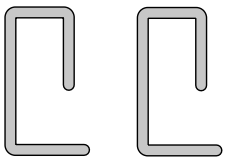	**Locking pins** For locking the hinges.

The baking tray and the baking and roasting shelf can be moved into five different heights within the cooking compartment. Always insert them as far as they will go so that the accessories do not touch the door panel. Ensure that you always insert the accessories into the cooking compartment the right way round.

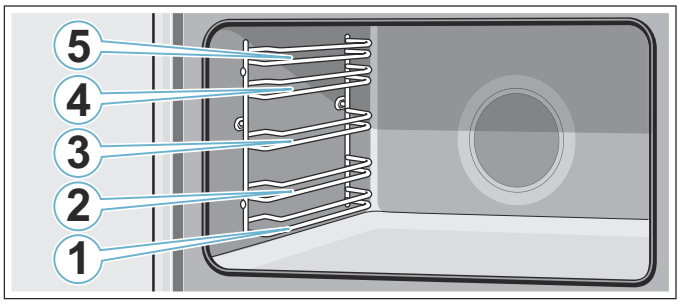

⚠ Warning – Risk of fire!
Under no circumstances should a roasting tin, baking tray, frying pan or any other form of cookware be placed directly on the oven floor. This causes the floor of the appliance to overheat and can seriously damage the appliance.

Locking function

The accessories can be pulled out approximately halfway until they lock in place. The locking function prevents the accessories from tilting when they are pulled out. The accessories must be inserted into the cooking compartment correctly for the tilt protection to work properly.

When inserting the wire rack, ensure that the lug **a** is at the rear and is facing downwards. The open side must be facing the appliance door and the outer rail must be facing downwards ⌣.

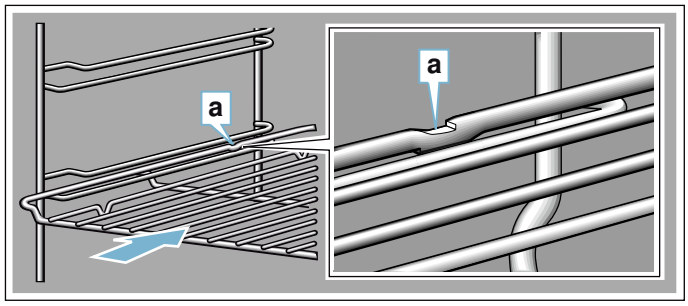

When inserting baking trays, ensure that lug **a** is at the rear and is facing downwards. The sloping edge of the accessory **b** must be facing towards the appliance door.

Example in the picture: Universal pan

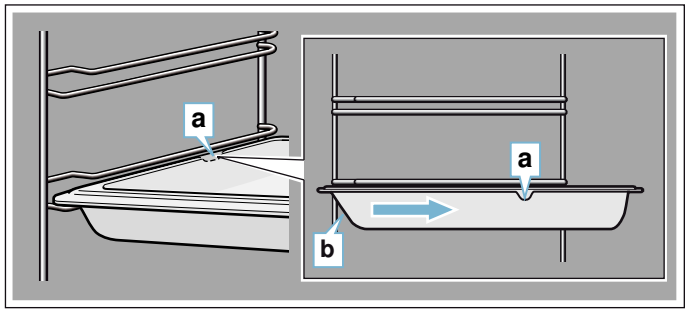

Special accessories

You can buy accessories from the after-sales service.

Accessories	Description
Enamel baking tray	For tray bakes and small baked products. Customer service number: 11012235
Universal pan	For moist cakes, pastries, frozen meals and large roasts. The universal pan can be used to catch dripping fat when you are grilling directly on the wire rack. After-sales service number: 11012236
Baking and roasting shelf	For ovenware, cake tins, joints, grilled items, frozen meals. After-sales service number: 11012237
Wok ring	Attachment for a wok; for placing on the wok burner. When using the wok attachment, it is possible to use cooking vessels with a diameter greater than 26 cm (woks, frying pans, pots, vessels with a curved base, etc.). After-sales service number: 00745721
Telescopic shelf set	Telescopic shelf set for one level. After-sales service number: 12006236
Cast iron pan supports	Complete set to replace factory-fitted enameled pan supports with those made of cast iron. Heavy duty quality, both stylish and highly durable. After-sales service number: HEZ298901A*

*also available from specialist retailers or online.

Before using for the first time

In this section, you can find out what you must do before using your oven or hob to prepare food for the first time. Read the following section beforehand.
→ *"Important safety information" on page 4*

Remove the appliance packaging and dispose of it appropriately.

Baking out the oven

Precleaning the oven

1. Remove accessories and hook-in racks from the cooking compartment.
2. Fully remove any remaining packaging, such as small pieces of polystyrene, from the cooking compartment.
3. Some parts are covered with a protective film. Remove the protective film.
4. Clean the outside of the appliance with a soft, damp cloth.
5. Clean the cooking compartment with hot soapy water.

Heating up the oven

To remove the new cooker smell, heat up the oven when it is empty and closed.

1. Turn the temperature selector to the maximum temperature.
2. Switch off the oven after 45 minutes.

Recleaning the oven

1. Clean the cooking compartment with hot soapy water.
2. Fit the hook-in racks.

Cleaning the burner caps and cups

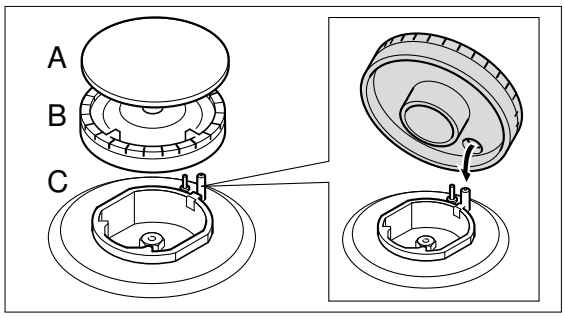

1. Clean the burner caps (A) and cups (B) with water and washing-up liquid.
2. Dry the parts well.
3. Place the burner cup (B) onto the burner (C).
4. Position the burner cap (A) exactly on the burner cup (B).

Cleaning the accessories

Before using the accessories, clean them thoroughly using a cloth and warm soapy water.

Operating the appliance

You have already learnt about the controls and how they work. Now we will explain how to set your appliance. You will learn about what happens when you switch the appliance on and off, and how to select the operating mode.

Hob

Switching on the gas burner

Notes

- Appliances with a hob cover must only be switched on if the hob cover is open.
- The burner caps must always be positioned exactly on top of the burner cups. The slots on the burner cup must be free from obstruction. All parts must be dry.
- Ensure that the burner is not subjected to draughts caused by air conditioning systems, fans or similar appliances.

1. Press the control knob for the required burner and turn it to the ⌀ position.
   The gas burner ignites.
2. Keep the control knob pressed for a few seconds until the flame stabilises.
3. Set the desired flame setting.

Setting	Meaning
⌀	Economy flame, lowest power
⌀	Large flame, highest power

The flame is not stable between positions o and ⌀. Always select a position between ⌀ and ⌀.

If the flame goes out

Switch off the control knob. Wait one minute and switch the burner on again.

⚠ Warning – Risk of fire!
If the flame goes out, gas will escape. Never leave the gas burner unattended during operation. Ensure that there are no draughts.

If the gas burner does not ignite

In the event of a power cut or damp ignition plugs, light the gas burner with a gas lighter or a match.

Switching off the gas burner

Turn the control knob for the required hotplate to position o.

Oven

Operating the oven

Switching on the oven

Note: Always keep the appliance door closed when it is in operation.

1. Turn the function selector to the desired operating mode.
2. Turn the temperature selector to set the desired temperature.
   The oven switches on.

The indicator lamp is lit when the oven is heating up. It goes out during pauses in heating.

Note: The indicator lamp also lights up when the function selector is in the off position and a temperature is set. The oven only begins to heat up when an operating mode is set.

Switching off the oven

1. Turn the function selector to the o position.
2. Turn the temperature selector to the o position.
   The oven switches off.

Cleaning agent

With good care and cleaning, your appliance will retain its appearance and remain fully functioning for a long time to come. We will explain here how you should correctly care for and clean your appliance.

⚠ Warning – Risk of electric shock!
Do not use any high-pressure cleaners or steam cleaners, which can result in an electric shock.

⚠ Warning – Risk of burns!
The appliance becomes very hot. Never touch the interior surfaces of the cooking compartment or the heating elements. Always allow the appliance to cool down. Keep children at a safe distance.

Suitable cleaning agents

Observe the following information to ensure that the different surfaces are not damaged by using the wrong type of cleaning agent.

Do not use any of the following

on the hob:

- Undiluted washing-up liquid or dishwasher detergent,
- Abrasive materials, scouring sponges,
- Aggressive cleaners such as oven spray or stain removers,
- High-pressure cleaners or steam jet cleaners.

Do not use any of the following

on the oven:

- Any harsh or abrasive cleaning agents,
- Cleaning agents with a high concentration of alcohol,
- Hard scouring pads or sponges,
- High-pressure cleaners or steam cleaners.

Wash new sponge cloths thoroughly before use.

⚠ Warning – Risk of burns!
The appliance becomes very hot. Never touch the interior surfaces of the cooking compartment or the heating elements. Always allow the appliance to cool down. Keep children at a safe distance.

Area	Cleaning
Appliance exterior	Hot soapy water: Clean with a dish cloth and then dry with a soft cloth. Do not use glass cleaner or a glass scraper.
Stainless steel front	Hot soapy water: Clean with a dish cloth and then dry with a soft cloth. Remove flecks of limescale, grease, starch and albumin (e.g. egg white) immediately. Corrosion can form under such flecks. Special stainless steel cleaning products suitable for hot surfaces are available from our after-sales service or from specialist retailers. Apply a very thin layer of the cleaning product with a soft cloth.
Aluminium and plastic	Glass cleaner: Clean with a soft cloth.
Gas hob and pan supports	Hot soapy water. Use very little water. Water must not be allowed to enter the appliance through the base of the burners. Clean boiled-over liquids and spilt food immediately. You can remove the pan supports. Do not clean the pan supports in the dishwasher.
Gas burners, hotplate	Remove the burner cups and caps, clean them with soapy water. The gas outlet openings must remain free from obstruction. Ignition plugs: Small, soft brush. The gas burners only work properly when the ignition plugs are clean. Dry all parts thoroughly. Ensure that they are positioned correctly when they are refitted. The burner caps are coated in black enamel. The colour may change over time. This does not affect their function. Do not clean the burner caps in the dishwasher.
Enamel surfaces (smooth surfaces)	Hot soapy water: Clean with a dish cloth and then dry with a soft cloth. Remove flecks of limescale, grease, starch and albumin (e.g. egg white) immediately. Corrosion can form under such flecks. Special stainless steel cleaning products suitable for hot surfaces are available from our after-sales service or from specialist retailers. Apply a very thin layer of the cleaning product with a soft cloth.
Enamel surfaces and self-cleaning surfaces	Observe the instructions for the surfaces of the cooking compartment that follow the table.
Door panels	Hot soapy water: Clean with a dish cloth and then dry with a soft cloth. Do not use a glass scraper or a stainless steel scouring pad.
Glass cover for the interior lighting	Hot soapy water: Clean with a dish cloth and then dry with a soft cloth. If the cooking compartment is heavily soiled, use oven cleaner.
Door seal Do not remove.	Hot soapy water: Clean with a dish cloth. Do not scour.
Rails	Hot soapy water: Soak and clean with a dish cloth or brush.
Accessories	Hot soapy water: Soak and clean with a dish cloth or brush. If there are heavy deposits of dirt, use a stainless steel scouring pad.

Notes

- Slight differences in colour on the front of the appliance are caused by the use of different materials, such as glass, plastic and metal.
- Shadows on the door panels, which look like streaks, are caused by reflections made by the interior lighting.
- Enamel is baked on at very high temperatures.This can cause some slight colour variation. This is normal and does not affect operation.
  The edges of thin trays cannot be completely enamelled. As a result, these edges can be rough. This does not impair the anti-corrosion protection.

Surfaces in the cooking compartment

The back wall in the cooking compartment is self-cleaning.You can tell this from the rough surface.

The base, ceiling and side panel are enamelled and have smooth surfaces.

Cleaning enamelled surfaces

Clean the smooth enamelled surfaces with a dish cloth and hot soapy water or a vinegar solution. Then dry with a soft cloth.

Soften baked-on food residues with a damp cloth and soapy water. Use stainless steel wire wool or oven cleaner to remove stubborn dirt.

Leave the cooking compartment open to dry after cleaning.

Note: Food residues can cause white deposits to form. These are harmless and do not affect how the appliance works. You can remove these residues using lemon juice if required.

Cleaning self-cleaning surfaces

The self-cleaning surfaces are coated with a porous, matte ceramic layer. This coating absorbs and dispels splashes from baking and roasting while the appliance is in operation.

If the self-cleaning surfaces no longer clean themselves sufficiently and dark stains appear, they can be cleaned using the cleaning function. To do this, refer to the information in the relevant section.

Caution!

Do not use oven cleaner on self-cleaning surfaces. This will damage the surfaces. If oven cleaner does get onto these surfaces, dab it off immediately using water and a sponge cloth. Do not rub the surface and do not use abrasive cleaning aids.

Keeping the appliance clean

Always keep the appliance clean and remove dirt immediately so that stubborn deposits of dirt do not build up.

⚠ Warning – Risk of fire!
Loose food remnants, fat and meat juices may catch fire. Before using the appliance, remove the worst of the food remnants from the cooking compartment, heating elements and accessories.

Tips

- Clean the cooking compartment after each use. This will ensure that dirt cannot be baked on.
- Always remove flecks of limescale, grease, starch and albumin (e.g. egg white) immediately.
- Use the universal pan for baking very moist cakes.
- Use suitable ovenware for roasting, e.g. a roasting dish.

Cleaning the cooking compartment

1. Pour 0.4 litres of water into the centre of the cooking compartment floor.
2. Set the type of heating ⊡.
3. Use the temperature controller to set 50 °C.
4. Switch off the appliance after 18 minutes.
5. Allow the appliance to cool down.
6. Clean the cooking compartment with a cloth.

⚠ Warning – Risk of burns!
The appliance becomes very hot. Never touch the interior surfaces of the cooking compartment or the heating elements. Always allow the appliance to cool down. Keep children at a safe distance.

Rails

Removing the hook-in racks

The hook-in racks are each fixed to the side panels of the cooking compartment at three points.

1. Grip the front of the hook-in rack and pull it to the middle of the cooking compartment.
   The front hook of the hook-in rack will release from the hole.
2. Fold out the hook-in rack further and pull it from the rear holes of the side panel.
3. Remove the hook-in rack from the cooking compartment.

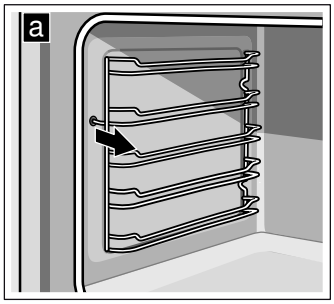

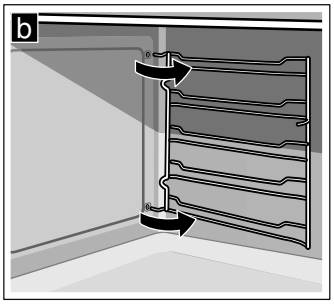

Inserting the hook-in rack

1. Insert the hooks of the hook-in rack into the rear holes in the side panel.
2. Press the front hook of the hook-in rack into the hole.

Appliance door

With good care and cleaning, your appliance will retain its appearance and remain fully functional for a long time to come. This will tell you how to clean the appliance door.

Removing and installing the door panels

To facilitate cleaning, you can remove the glass panels from the oven door.

Removing the door panels

1. Open the oven door fully.
2. Lock both hinges on the left and right using the locking pin.
   Note: The locking pins must be fully inserted into the holes in the hinges.

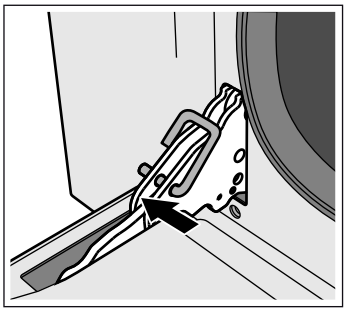

3. Lift the bottom of the inner panel slightly until the fastening pins come out of the holder (**1**).
4. Carefully lift the top of the inner panel until the fastening pins come out of the holder (**2**).
   Caution!
   When lifting the inner panel, the middle panel may stick to the inner panel. Make sure that the middle panel does not fall.

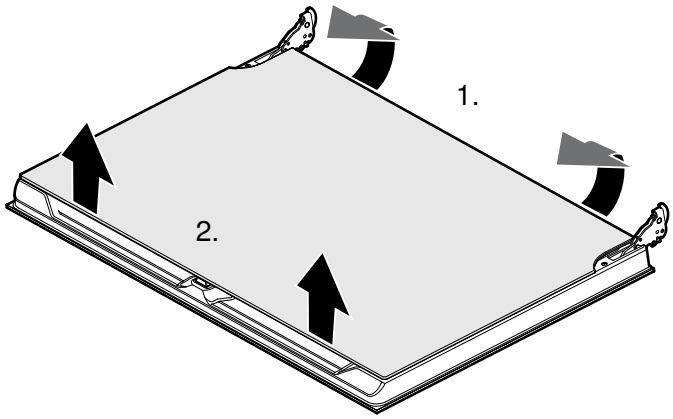

5. Remove the inner panel.

6. Remove the middle panel.

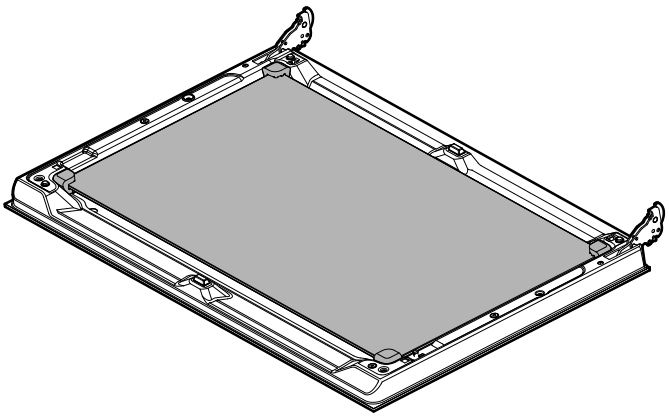

Note: The middle panel is kept in place with rubber bushings rather than retaining pins.

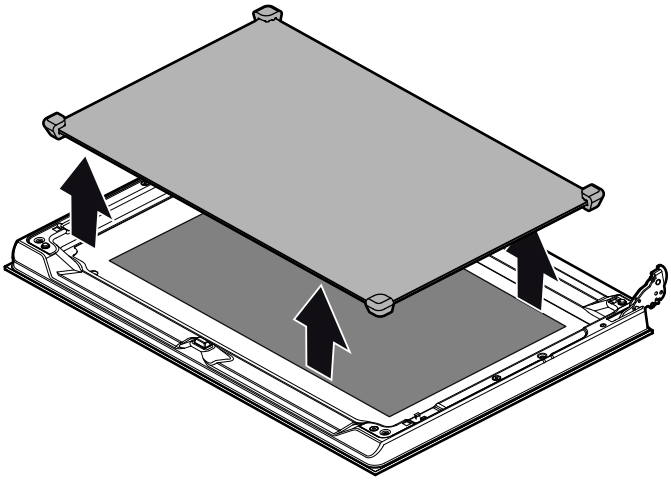

Clean the panels with glass cleaner and a soft cloth.

⚠ Warning – Risk of injury!
Scratched glass in the appliance door may develop into a crack. Do not use a glass scraper, sharp or abrasive cleaning aids or detergents.

Fitting the door panels

1. Reinsert the middle panel.
   Notes
   – If the Low-E symbol can be read, the middle panel is inserted correctly.
   – Make sure that the panel is seated correctly. All rubber mounts must lay flat against the outer panel.
2. Reinsert the inner panel.
   Note: All four fastening pins must engage in the holders provided for them.
3. Remove the locking pins and close the oven door.

Removing and fitting the appliance door

If the oven is very heavily soiled, the oven door can be removed for easier cleaning. Normally, however, this is not necessary.

Removing the appliance door

1. Open the oven door fully.
2. Lock both hinges on the left and right using the locking pin **(a)**.
   Note: The locking pins must be fully inserted into the holes in the hinges.
3. Grip the oven door on either side with both hands and close the oven door by approx. 30° **(b)**.

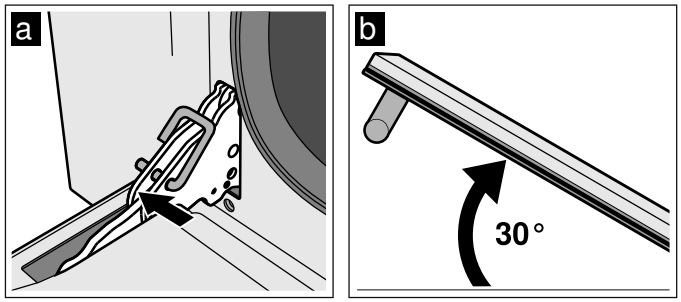

4. Raise the oven door slightly and pull it out.
   Note: Do not fully close the oven door. The hinges could become bent and the enamel could be damaged.

Fitting the appliance door

1. Grip the oven door on either side with both hands.
2. Slide the hinges into the slots in the oven **(a).**
   Note: The notch below the hinges must engage into the frame of the oven **(b)**.

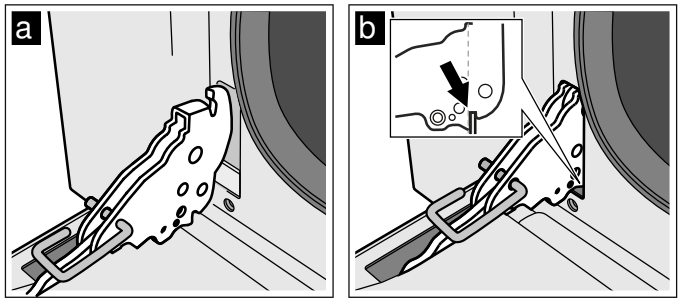

3. Lower the door downwards.
4. Remove the locking pins.

⚠ Warning – Risk of injury!
Do not reach into the hinge if the oven door falls out unintentionally or a hinge snaps closed. Call after-sales service.

⚠ Warning – Risk of injury!
The door may not close properly if the door hinges have not engaged correctly. This will allow heat to escape and the parts of the appliance may become very hot. To prevent this from happening, remove the door again. Then refit the door as shown in the drawing, making sure that the groove on the underside of the hinges engages in the oven frame.

Trouble shooting

DO NOT MODIFY THIS APPLIANCE.

SERVICING SHALL ONLY BE CARRIED OUT BY BOSCH'S AUTHORISED PERSON.

Warning – Risk of injury!
Incorrect repairs may cause serious hazards. Repairs to the appliance may only be performed by a qualified technician. If repairs are required, contact the after-sales service.

Fault table

Fault	Possible cause	Remedy/information
The appliance is not functioning.	Faulty fuse	Look in the fuse box and check that the fuse is in working order.
	Power cut	Check whether the kitchen light works.
The oven light has failed.	Faulty oven light	Change the oven light bulb, (see section "Replacing oven light")
The gas burner does not ignite.	Power cut or damp ignition plugs	Light the gas burner with a gas lighter or a match.
The oven does not heat up.	Faulty fuse.	Check the fuse and replace if necessary.
	The function selector has not been set.	Set the function selector.
All dishes prepared in the oven may burn within a short period of time.	Faulty thermostat	Call the after-sales service.
The door panel steams up when the oven is hot.	Normal occurrence; caused by the difference in temperature.	Not possible; this has no effect on oven performance.

Replacing the oven light bulb

If the oven light bulb fails, it must be replaced. Replacement heat-resistant bulbs can be obtained from the after-sales service or from specialist retailers. Please specify the E number and FD number of your appliance. Do not use any other type of bulb.

Warning – Risk of electric shock!
When replacing the cooking compartment bulb, the bulb socket contacts are live. Before replacing the bulb, unplug the appliance from the mains or switch off the circuit breaker in the fuse box.

1. Allow the cooking compartment to cool down.
2. Open the appliance door.
3. Place a tea towel in the cooking compartment to prevent damage.
4. Remove the hook-in racks.
5. Remove the glass cover. To do this, open the glass cover at the front with your hand. Should you experience difficulties removing the glass cover, use a spoon to help.
6. Remove the oven light bulb.

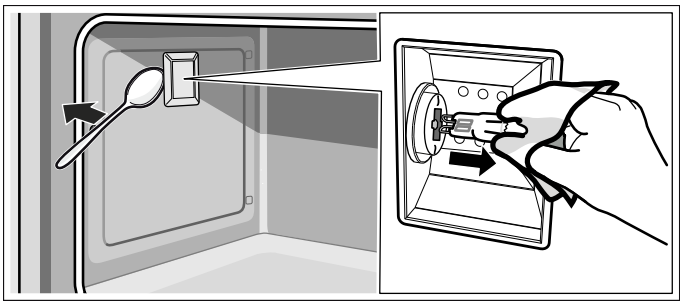

7. Replace the oven light bulb with a bulb of the same type:
   Voltage: 230 V;
   Power: 40 W;
   Fitting: G9;
   Temperature resistance: 300 °C
8. Refit the glass cover for the oven light bulb.
9. Refit the hook-in racks.
10. Remove the tea towel.
11. Switch the circuit breaker back on.
12. Check that the oven lighting is working again.

Customer service

Our after-sales service is there for you if your appliance needs to be repaired. We will always find an appropriate solution, also in order to avoid after-sales personnel having to make unnecessary visits.

When calling us, please give the product number (E no.) and the production number (FD no.) so that we can provide you with the correct advice. The rating plate and the relevant numbers can be found on the inside of the door frame.

You can make a note of the numbers of your appliance and the telephone number of the after-sales service in the space below to save time should it be required.

E no.	**FD no.**
After-sales service☏	

Please be aware that a visit by an after-sales engineer will be charged if a problem turns out to be the result of operator error, even during the warranty period.

Please find the contact data of all countries in the enclosed customer service list.

To book an engineer visit and product advice
Australia 1300 368 339
New Zealand 0800 245 700

Rely on the professionalism of the manufacturer. You can therefore be sure that the repair is carried out by trained service technicians who carry original spare parts for your appliances.

Tested for you in our cooking studio

Here, you can find a selection of dishes and the ideal settings for them. We will show you which type of heating and temperature are best suited to your dish. You will get information on suitable cooking accessories and the height at which they should be placed in the oven. You will also get tips about cookware and preparation methods.

Note: A lot of steam can build up in the cooking compartment when cooking food.
Your appliance is very energy-efficient and radiates very little heat to its surroundings during operation. Due to the high difference in temperature between the appliance interior and the external parts of the appliance, condensation may build up on the door, control panel or adjacent kitchen cabinet panels. This is a normal physical phenomenon. Condensation can be reduced by preheating the oven or opening the door carefully.

Table of dishes

Dish	Weight (in kg)	Type of heating	Shelf position	Temperature in °C	Cooking time in mins
Lasagne	3-4		1	220-230	45-50
Pasta bake	3-4		1	220-230	45-50
Roast veal	2		2	180-190	90-100
Pork	2		2	180-190	70-80
Sausages	1.5		4	Max.	15
Roast beef	1		2	200	40-45
Roast rabbit	1.5		2	180-190	70-80
Turkey breast	2		2	180-190	110-120
Pork neck joint	2-3		2	180-190	170-180
Roast chicken	1.2		2	180-190	65-70
Pork cutlet	1.5		4	Max.	1st side 15
					2nd side 5
Spare ribs	1.5		4	Max.	1st side 10
					2nd side 10
Bacon	0.7		5	Max.	1st side 7
					2nd side 8
Fillet of pork	1.5		4	Max.	1st side 10
					2nd side 5
Fillet of beef	1		5	Max.	1st side 10
					2nd side 7
Large rainbow trout	1.2		2	150-160	35-40
Monkfish	1.5		2	160	60-65
Turbot	1.5		2	160	45-50
Pizza	1		2	Max.	8-9
Bread	1		2	190-200	25-30
Focaccia	1		2	180-190	20-25
Bundt cake	1		2	160	55-60
Fruit flan	1		2	160	35-40
Cheesecake	1		2	160-170	25-60
Shortcrust pastry tart	1		2	160	20-25
Parfait cake	1.2		2	160	55-60
Cream puffs	1.2		2	180	80-90
Sponge cake	1		2	150-160	55-60
Rice pudding	1		2	160	55-60
Brioche	0.6		2	160	30-35

Tips for using your appliance

Here you will find a selection of tips on ovenware and preparation methods.

Notes

- Use the accessories provided. Additional accessories may be obtained as special accessories from specialist retailers or from the after-sales service.
  Before using the oven, remove any unnecessary accessories and ovenware from the cooking compartment.
- Always use an oven cloth or oven gloves when taking accessories or cookware out of the cooking compartment.

Baking tips

You want to find out whether the cake is completely cooked in the middle.	Push a cocktail stick into the highest point on the cake. If the cocktail stick comes out clean with no dough residue, the cake is ready.
The cake collapses.	Next time, use less liquid. Alternatively, set the temperature to be 10 °C lower and extend the baking time. Adhere to the specified ingredients and preparation instructions in the recipe.
The cake has risen in the middle but is lower around the edge.	Only grease the base of the springform cake tin. After baking, loosen the cake carefully with a knife.
The fruit juice overflows.	Next time, use the universal pan.
Small baked items stick to one another during baking.	There should be a gap of approx. 2 cm around each item. This gives enough space for the baked items to expand well and brown on all sides.
The cake is too dry.	Set the temperature 10 °C higher and shorten the baking time.
The cake is generally too light in colour.	If the shelf position and the cookware are correct, then you should increase the temperature if necessary or extend the baking time.
The cake is too light on top, and too dark underneath.	Bake the cake one level higher in the oven the next time.
The cake is too dark on top, and too light underneath.	Bake the cake one level lower in the oven the next time. Select a lower temperature and extend the baking time.
Cakes baked in a tray or tin are too brown at the back.	Place the baking tray in the middle of the accessories, not directly against the back wall.
The whole cake is too dark.	Select a lower temperature next time and extend the baking time if necessary.
The cake is unevenly browned.	Select a slightly lower temperature. Protruding greaseproof paper can affect the air circulation. Always cut greaseproof paper to size. Ensure that the baking tin does not stand directly in front of the openings in the cooking compartment back wall. When baking small items, you should use similar sizes and thicknesses wherever possible.
You were baking on several levels. The items on the top baking tray are darker than those on the lower baking tray.	Always select hot air when baking on several levels. Baked items that are placed into the oven on trays or in baking tins/dishes at the same time will not necessarily be ready at the same time.
The cake looks good, but is not cooked properly in the middle.	Use a lower temperature and bake slightly longer; if necessary, add slightly less liquid. For cakes with a moist topping, bake the base first. Sprinkle it with almonds or breadcrumbs and then place the topping on top.
The cake cannot be turned out of the dish when it is turned upside down.	Allow the cake to cool down for 5 to 10 minutes after baking. If it still sticks, carefully loosen the cake around the edges again using a knife. Turn the cake tin upside down again and cover it several times with a cold, wet cloth. Next time, grease the baking tin/dish and sprinkle with breadcrumbs.

Tips for Roasting and Braising

The roast is too dark and the crackling is burned in places, and/or the roast is too dry.	Check the shelf position and temperature. Select a lower temperature the next time and reduce the roasting time if necessary.
The crackling is too thin.	Increase the temperature or switch on the grill briefly at the end of the roasting time.
The roast looks good but the juices are burnt.	Next time, use a smaller roasting dish and add more liquid if necessary.
The roast looks good but the juices are too clear and watery.	Next time, use a larger roasting dish and add less liquid if necessary.
The meat gets burned during braising.	The roasting dish and lid must fit together well and close properly. Reduce the temperature and add more liquid when braising if necessary.

Acrylamide in foodstuffs

Acrylamide is mainly produced in grain and potato products prepared at high temperatures, such as potato crisps, chips, sliced bread, bread rolls, bread or fine baked goods (biscuits, gingerbread, spiced biscuit).

Tips for keeping acrylamide to a minimum	
General	■ Keep cooking times as short as possible. ■ Cook food until it is golden brown, but not too dark. ■ Large, thick pieces of food contain less acrylamide.
Baking	With top/bottom heating at max. 200 °C. With hot air at max. 180 °C.
Biscuits	With top/bottom heating at max. 190 °C. With hot air at max. 170 °C. Egg or egg yolk reduces the production of acrylamide.
Oven chips	Spread out a single layer evenly on the baking tray. Cook at least 400 g at once on a baking tray so that the chips do not dry out.

Robert Bosch Hausgeräte GmbH
Carl-Wery-Straße 34
81739 München, GERMANY

www.bosch-home.com

9001163267
970331