Register your new Bosch now:
www.bosch-home.com/welcome

Extractor hood
DHL895CAU

BOSCH

[en] Instruction manual

en Table of contents

Important safety information 3
Environmental protection 5
Saving energy 5
Environmentally-friendly disposal 5
Operating modes 5
Exhaust air mode 5
Circulating-air mode 5
Operating the appliance 6
Lighting 6
Saturation indicator 6
Cleaning and maintenance 7
Trouble shooting 9
After-sales service 9
Accessories for circulated air mode 9

Additional information on products, accessories, replacement parts and services can be found at **www.bosch-home.com** and in the online shop **www.bosch-eshop.com**

⚠ Important safety information

Read these instructions carefully. Only then will you be able to operate your appliance safely and correctly. Retain the instruction manual and installation instructions for future use or for subsequent owners.

The appliance can only be used safely if it is correctly installed according to the safety instructions. The installer is responsible for ensuring that the appliance works perfectly at its installation location.

This appliance is intended for domestic use and the household environment only. The appliance is not intended for use outside. Do not leave the appliance unattended during operation. The manufacturer is not liable for damage which is caused by improper use or incorrect operation.

This appliance is intended for use up to a maximum height of 2000 metres above sea level.

This appliance may be used by children over the age of 8 years old and by persons with reduced physical, sensory or mental capabilities or by persons with a lack of experience or knowledge if they are supervised or are instructed by a person responsible for their safety how to use the appliance safely and have understood the associated hazards.

Children must not play with, on, or around the appliance. Children must not clean the appliance or carry out general maintenance unless they are at least 8 years old and are being supervised.

Keep children below the age of 8 years old at a safe distance from the appliance and power cable.

Check the appliance for damage after unpacking it. Do not connect the appliance if it has been damaged in transport.

Only a licensed professional may connect appliances without plugs. Damage caused by incorrect connection is not covered under warranty.

Danger of suffocation!

Packaging material is dangerous to children. Never allow children to play with packaging material.

Danger of death!

Risk of poisoning from flue gases that are drawn back in.

Always ensure adequate fresh air in the room if the appliance is being operated in exhaust air mode at the same time as room air-dependent heat-producing appliance is being operated.

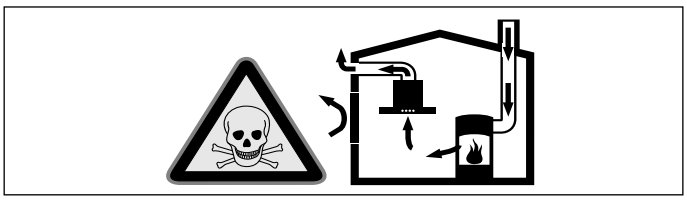

Room air-dependent heat-producing appliances (e.g. gas, oil, wood or coal-operated heaters, continuous flow heaters or water heaters) obtain combustion air from the room in which they are installed and discharge the exhaust gases into the open air through an exhaust gas system (e.g. a chimney).

In combination with an activated vapour extractor hood, room air is extracted from the kitchen and neighbouring rooms - a partial vacuum is produced if not enough fresh air is supplied. Toxic gases from the chimney or the extraction shaft are sucked back into the living space.

- Adequate incoming air must therefore always be ensured.
- An incoming/exhaust air wall box alone will not ensure compliance with the limit.

Safe operation is possible only when the partial vacuum in the place where the heat-producing appliance is installed does not exceed 4 Pa (0.04 mbar). This can be achieved when the air needed for combustion is able to enter through openings that cannot be sealed, for example in doors, windows, incoming/exhaust air wall boxes or by other technical means.

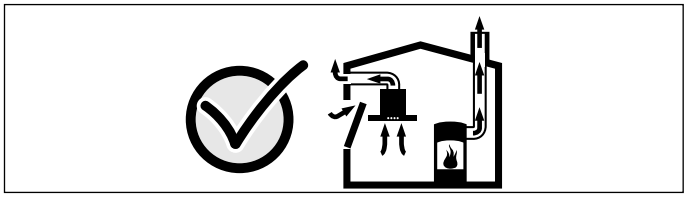

In any case, consult your responsible Master Chimney Sweep. He is able to assess the house's entire ventilation setup and will suggest the suitable ventilation measures to you.

Unrestricted operation is possible if the vapour extractor hood is operated exclusively in the circulating-air mode.

Risk of fire!

- Grease deposits in the grease filter may catch fire.

  Clean the grease filter at least every 2 months.

  Never operate the appliance without the grease filter.
- Grease deposits in the grease filter may catch fire. Never work with naked flames close to the appliance (e.g. flambéing). Do not install the appliance near a heat-producing appliance for solid fuel (e.g. wood or coal) unless a closed, non-removable cover is available. There must be no flying sparks.
- Hot oil and fat can ignite very quickly. Never leave hot fat or oil unattended. Never use water to put out burning oil or fat. Switch off the hotplate. Extinguish flames carefully using a lid, fire blanket or something similar.
- When gas burners are in operation without any cookware placed on them, they can build up a lot of heat. A ventilation appliance installed above the cooker may become damaged or catch fire. Only operate the gas burners with cookware on them.
- Operating several gas burners at the same time gives rise to a great deal of heat. A ventilation appliance installed above the cooker may become damaged or catch fire. Never operate two gas burners simultaneously on the highest flame for longer than 15 minutes. One large burner of more than 5 kW (wok) is equivalent to the power of two gas burners.

Risk of burns!

The accessible parts become very hot when in operation. Never touch hot parts. Keep children at a safe distance.

Risk of injury!

- Components inside the appliance may have sharp edges. Wear protective gloves.
- Items placed on the appliance may fall down. Do not place any objects on the appliance.

Risk of electric shock!

- A defective appliance may cause electric shock. Never switch on a defective appliance. Unplug the appliance from the mains or switch off the circuit breaker in the fuse box. Contact the after-sales service.
- Incorrect repairs are dangerous. Repairs may only be carried out and damaged power cables replaced by one of our trained after-sales technicians. If the appliance is defective, unplug the appliance from the mains or switch off the circuit breaker in the fuse box. Contact the after-sales service.
- Do not use any high-pressure cleaners or steam cleaners, which can result in an electric shock.

Causes of damage

Caution!

Risk of damage due to corrosion. Always switch on the appliance while cooking to avoid condensation. Condensate can produce corrosion damage.

Always replace faulty bulbs to prevent the remaining bulbs from overloading.

Risk of damage due to ingress of humidity into the electronic circuitry. Never clean operator controls with a wet cloth.

Surface damage due to incorrect cleaning. Clean stainless steel surfaces in the direction of the grain only. Do not use any stainless steel cleaners for operator controls.

Surface damage due to strong or abrasive cleaning agents. Never use strong and abrasive cleaning agents.

Risk of damage from returning condensate. Install the exhaust duct in such a way that it falls away from the appliance slightly (1° slope).

Environmental protection

Your new appliance is particularly energy-efficient. Here you can find tips on how to save even more energy when using the appliance, and how to dispose of your appliance properly.

Saving energy

- During cooking, ensure that there is a sufficient supply of air so that the extractor hood can work efficiently and with a low level of operating noise.
- Adjust the fan speed to the intensity of the cooking fumes. Only use intensive mode where this is required. A lower fan speed means that less energy is consumed.
- If there are intensive cooking fumes, select a higher fan speed in good time. If cooking fumes have already spread in the kitchen, the extractor hood must be operated for longer.
- Switch off the extractor hood if you no longer require it.
- Switch off the lighting if you no longer require it.
- Clean and, if required, replace the filter at regular intervals in order to increase the effectiveness of the ventilation system and to prevent the risk of fire.

Environmentally-friendly disposal

Dispose of packaging in an environmentally-friendly manner.

This appliance is labelled in accordance with European Directive 2012/19/EU concerning used electrical and electronic appliances (waste electrical and electronic equipment - WEEE). The guideline determines the framework for the return and recycling of used appliances as applicable throughout the EU.

Operating modes

This appliance can be used in exhaust-air mode or circulating-air mode.

Exhaust air mode

The air which is drawn in is cleaned by the grease filters and conveyed to the exterior by a pipe system.

Note: The exhaust air must not be conveyed into a functioning smoke or exhaust gas flue or into a shaft which is used to ventilate installation rooms which contain heat-producing appliances.

- Before conveying the exhaust air into a non-functioning smoke or exhaust gas flue, obtain the consent of the heating engineer responsible.
- If the exhaust air is conveyed through the outer wall, a telescopic wall box should be used.

Circulating-air mode

The air which is drawn in is cleaned by the grease filters and an activated carbon filter and conveyed back into the kitchen.

Note: To bind odours in circulating-air mode, you must install an activated carbon filter. The different options for operating the appliance in circulating-air mode can be found in the brochure. Alternatively, ask your dealer. The required accessories are available from specialist outlets, from customer service or from the Online Shop. The accessory numbers can be found at the end of the instructions for use.

Operating the appliance

These instructions apply to several appliance variants. It is possible that individual features are described which do not apply to your appliance.

Note: Switch on the extractor hood when you start cooking and switch it off again several minutes after you have finished cooking. This is the most effective way of removing the kitchen fumes.

Control panel

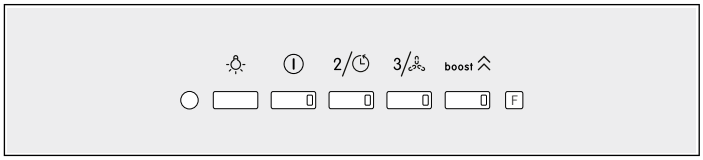

Explanation	
☼	Light on/off
⏻	Fan off/fan level 1
2/⏲	Fan level 2/fan run-on
3/	Fan level 3/interval ventilation
boost ⌃	Intensive mode
F	Saturation indicator

Setting the fan

Switching on

Press the ⏻, 2/⏲, 3/, or boost ⌃ button.

Switching off

Press the ⏻ button.

Note: If fan level 2 or 3 is switched on, press the ⏻ button twice.

Intensive setting

You can use the intensive setting if there is a large build-up of odours and fumes/vapours.

Press the boost ⌃ button.

Intensive mode is activated.

Notes

- The intensive mode run time is limited to 6 minutes.
- Once 6 minutes has elapsed, the appliance switches back to the fan level that was previously selected.
- Intensive mode can be activated when the appliance is switched off; once 6 minutes has elapsed, the appliance switches itself off again.

Fan run-on

With the fan run-on, the appliance continues to run at the level that was previously set and switches off automatically after 30 minutes.

1. Set the fan level.

2. Press and hold the 2/⏲ button.

Fan run-on is activated. The button for this level flashes green.

Interval ventilation

With interval ventilation, the ventilation system switches on automatically at the lowest level for 10 minutes every hour. The interval ventilation switches off after 24 hours.

Switching on

Press and hold the 3/ button.

The interval ventilation is activated. The ⏻ button flashes.

Switching off

Press and hold the 3/ button or press the ⏻ button.

Lighting

The lighting can be switched on and off independently of the ventilation system.

Press the ☼ button.

The lighting is switched on.

Setting the brightness

Press and hold the ☼ button until the desired brightness is reached.

Saturation indicator

If F is lit, this means that the integrated filters are saturated:

Lit permanently: clean the metal grease filter

For instructions on how to clean metal grease filters, refer to the section *Cleaning and maintenance*.

Resetting the saturation indicator

1. Switch off the appliance.

2. Press and hold the ⏻ button for 3 seconds.

The saturation indicator is reset. F goes out.

Cleaning and maintenance

⚠ **Risk of burns!**

The appliance will become hot during operation, especially near the bulbs. Allow the appliance to cool down before cleaning.

⚠ **Risk of electric shock!**

Penetrating moisture may result in an electric shock. Clean the appliance using a damp cloth only. Before cleaning, pull out the mains plug or switch off the circuit breaker in the fuse box.

⚠ **Risk of electric shock!**

Do not use any high-pressure cleaners or steam cleaners, which can result in an electric shock.

⚠ **Risk of injury!**

Components inside the appliance may have sharp edges. Wear protective gloves.

Cleaning agents

To ensure that the different surfaces are not damaged by using the wrong cleaning agent, observe the information in the table. Do not use any of the following:

- Harsh or abrasive cleaning agents,
- Cleaning agents with a high alcohol content,
- Hard scouring pads or cleaning sponges,
- High-pressure cleaners or steam cleaners.

Wash new sponge cloths thoroughly before use.

Follow all instructions and warnings included with the cleaning agents.

Area	Cleaning agent
Stainless steel	Hot soapy water: Clean with a dish cloth and then dry with a soft cloth. Clean stainless steel surfaces in the grind direction only. Special stainless steel cleaning products are available from our after-sales service or from specialist retailers. Apply a very thin layer of the cleaning product with a soft cloth.
Painted surfaces	Hot soapy water: Clean using a damp dish cloth and dry with a soft cloth/towel. Do not use any stainless steel cleaners.
Aluminium and plastic	Glass cleaner: Clean with a soft cloth.
Glass	Glass cleaner: Clean with a soft cloth. Do not use a glass scraper.
Controls	Hot soapy water: Clean using a damp dish cloth and dry with a soft cloth/towel. Risk of electric shock caused by penetrating moisture. Risk of damage to the electronics from penetrating moisture. Never clean operating controls with a wet cloth. Do not use any stainless steel cleaners.

Removing metal grease filter

1. Open the filter cover.

   Note: Grasp the front corners of the filter cover and pull it down in a single, swift motion.

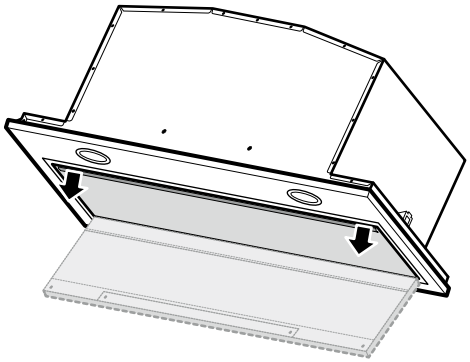

2. Open the lock and fold down the metal grease filter.

   Note: To avoid causing damage, do not bend the metal grease filter.

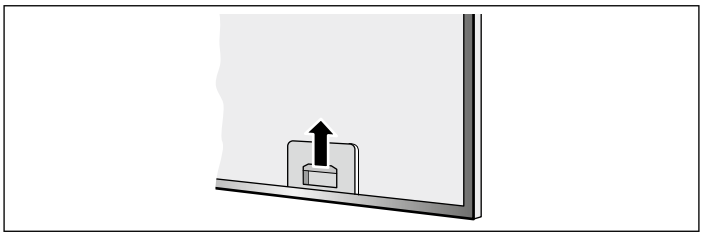

3. Take the metal grease filter out of the holder.

   Note: Fat may accumulate in the bottom of the metal grease filter. Hold the metal grease filter level to prevent fat from dripping out.

4. Clean the appliance from the inside.
5. Clean the metal grease filter and let it dry before re-fitting.

Cleaning the metal mesh grease filters

These instructions apply to several appliance variants. It is possible that individual features are described which do not apply to your appliance.

⚠ **Risk of fire!**

Grease deposits in the grease filter may catch fire.

Clean the grease filter at least every 2 months.

Never operate the appliance without the grease filter.

Notes

- Do not use any aggressive, acidic or alkaline cleaning agents.
- When cleaning the metal mesh grease filters, also clean the holder for the metal mesh grease filters in the appliance using a damp cloth.
- The metal mesh grease filters can be cleaned in the dishwasher or by hand.

By hand:

Note: You can use a special grease solvent for stubborn dirt. It can be ordered via the Online Shop.

- Soak the metal mesh grease filters in a hot soapy solution.
- Clean the filters with a brush and then rinse them thoroughly.
- Leave the metal mesh grease filters to drain.

In the dishwasher:

Note: If the metal mesh grease filters are cleaned in the dishwasher, slight discolouration may occur. This has no effect on the function of the metal mesh grease filters.

- Do not clean heavily soiled metal mesh grease filters together with utensils.
- Place the metal mesh grease filters loosely in the dishwasher. The metal mesh grease filters must not be wedged in.

Installing the metal mesh grease filter

1. Insert the metal mesh grease filter.
   While doing this, place the other hand under the metal mesh grease filter.
2. Fold the metal mesh grease filter upwards, locking it in place.

Removing the activated charcoal filter (only in circulating-air mode)

In order to guarantee efficient odour filtration, the filter must be serviced regularly.

The activated charcoal filters must be replaced at least every 4 months.

Notes

- The activated charcoal filters are not included in the delivery. The activated charcoal filters can be obtained from specialist retailers, from our after-sales service or from the Online Shop.
- The activated charcoal filters cannot be cleaned or reactivated.

1. Remove the metal grease filters.
2. Remove the activated charcoal filter from the retainer.

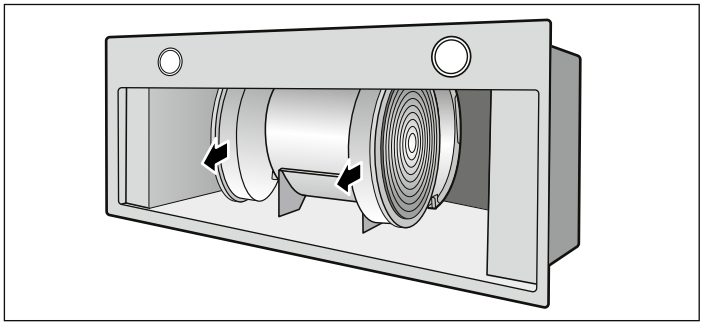

3. Guide the activated charcoal filter around the motor.

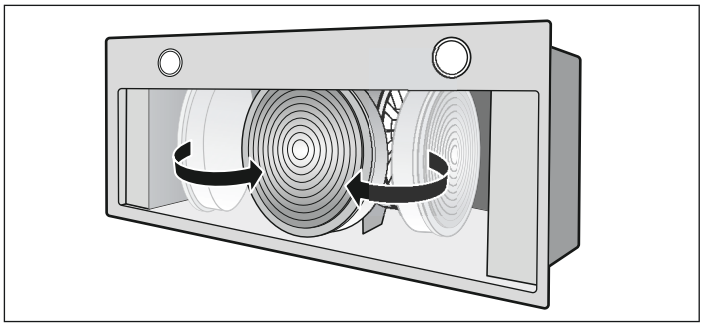

4. Take out the activated charcoal filter.

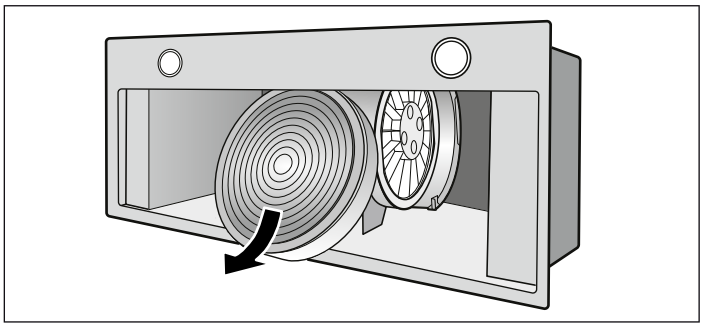

5. Clean the appliance.

Fitting the activated charcoal filter (only in circulating-air mode)

1. Insert the activated charcoal filter into the extractor hood.

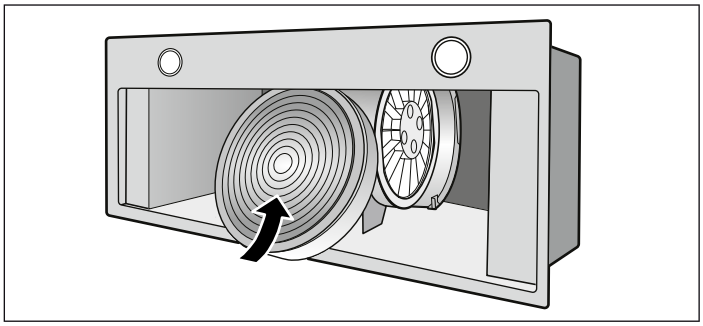

2. Guide the activated charcoal filter around the motor.

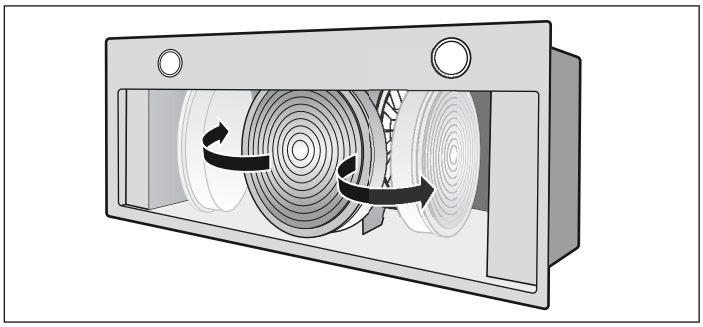

3. Carefully slide the new activated charcoal filter into the retainer.

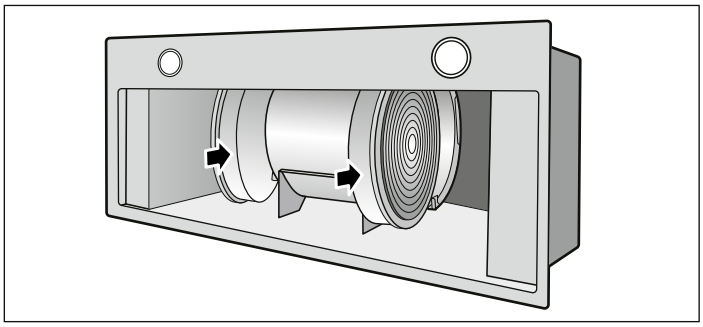

4. Install the metal grease filters.

Trouble shooting

Malfunctions often have simple explanations. Please read the following notes before calling the after-sales service.

⚠ **Risk of electric shock!**

Incorrect repairs are dangerous. Repairs may only be carried out and damaged power cables replaced by one of our trained after-sales technicians. If the appliance is defective, unplug the appliance from the mains or switch off the circuit breaker in the fuse box. Contact the after-sales service.

LED lights

Defective LED lights must only be replaced by the manufacturer, their customer service department or a licensed technician (electrician).

Malfunction table

Fault	Possible cause	Solution
The appliance does not work	The plug is not plugged into the mains	Connect the appliance to the power supply
	Power cut	Check whether other kitchen appliances are working
	The fuse is faulty	Check in the fuse box to make sure that the fuse for the appliance is in working order
The lighting is not working	The LED lights are defective	Call the after-sales service
F is lit permanently.	The metal grease filter is saturated.	Clean the metal grease filter; see section *Cleaning and maintenance*.

After-sales service

Our after-sales service is there for you if your appliance needs to be repaired. We will always find the right solution in order to avoid unnecessary visits from a service technician.

When calling us, please give the product number (E no.) and the production number (FD no.) so that we can provide you with the correct advice. The rating plate with these numbers can be found inside the appliance (remove the metal mesh grease filter to gain access).

You can make a note of the numbers of your appliance and the telephone number of the after-sales service in the space below to save time should it be required.

E no.	FD no.

After-sales service ☏

Please be aware that a visit by an after-sales engineer will be charged if a problem turns out to be the result of operator error, even during the warranty period.

After-sales contact details for all countries can be found in the attached after-sales service directory.

Accessories for circulated air mode

(not included in the delivery)

DHZ5316

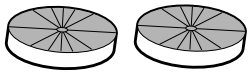

DHZ5605

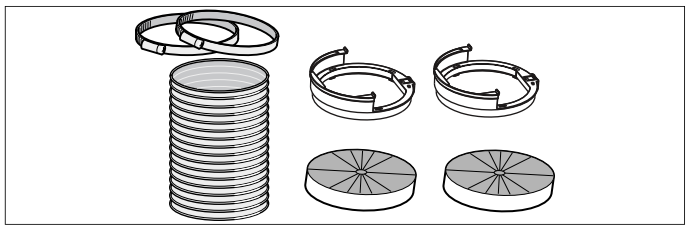

Robert Bosch Hausgeräte GmbH
Carl-Wery-Straße 34
81739 München
Germany
www.bosch-home.com

9001018774

970120