Built-in oven HBG33B5.0

BOSCH

[en] Instruction manual

en Table of contents

Important safety information **4**
Causes of damage 5
Your new oven **6**
Control panel 6
Buttons and display 6
Function selector 6
Temperature selector 7
Cooking compartment 7
Your accessories **7**
Inserting accessories 7
Optional accessories 7
After-sales service products 9
Before using the oven for the first time **9**
Setting the clock 9
Heating up the oven 9
Cleaning the accessories 9
Setting the oven **10**
Type of heating and temperature 10
Rapid heating 10
Setting the time-setting options **10**
Timer 10
Cooking time 11
End time 11
Clock 12
Childproof lock **12**
Changing the basic settings **12**
Care and cleaning **13**
Cleaning agents 13
Detaching and refitting the rails 13
Folding down the grill element 14
Detaching and attaching the oven door 14
Removing and installing the door panels 15
Troubleshooting **15**
Malfunction table 15
Replacing the bulb in the oven ceiling light 16
Glass cover 16
After-sales service **16**
E number and FD number 16
Energy and environment tips **16**
Saving energy 16
Environmentally-friendly disposal 16
Tested for you in our cooking studio **17**
Cakes and pastries 17
Baking tips 19
Meat, poultry, fish 19
Tips for roasting and grilling 22
Bakes, gratins, toast with toppings 22
Convenience products 22
Special dishes 23
Defrost 23
Drying 24
Preserving 24
Acrylamide in foodstuffs **25**
Test dishes **25**
Baking 25
Grilling 26

Additional information on products, accessories, replacement parts and services can be found at **www.bosch-home.com** and in the online shop **www.bosch-eshop.com**

⚠ Important safety information

Read these instructions carefully. Only then will you be able to operate your appliance safely and correctly. Retain the instruction manual and installation instructions for future use or for subsequent owners.

This appliance is only intended to be fully fitted in a kitchen. Observe the special installation instructions.

Check the appliance for damage after unpacking it. Do not connect the appliance if it has been damaged in transport.

Only a licensed professional may connect appliances without plugs. Damage caused by incorrect connection is not covered under warranty.

This appliance is intended for domestic use only. The appliance must only be used for the preparation of food and drink. The appliance must be supervised during operation. Only use this appliance indoors.

This appliance may be used by children over the age of 8 years old and by persons with reduced physical, sensory or mental capabilities or by persons with a lack of experience or knowledge if they are supervised or are instructed by a person responsible for their safety how to use the appliance safely and have understood the associated hazards.

Children must not play with, on, or around the appliance. Children must not clean the appliance or carry out general maintenance unless they are at least 8 years old and are being supervised.

Keep children below the age of 8 years old at a safe distance from the appliance and power cable.

Always slide accessories into the cooking compartment correctly. *See "Description of accessories* in the instruction manual.

Risk of fire!

- Combustible items stored in the cooking compartment may catch fire. Never store combustible items in the cooking compartment. Never open the appliance door if there is smoke inside. Switch off the appliance and unplug it from the mains or switch off the circuit breaker in the fuse box.
- A draught is created when the appliance door is opened. Greaseproof paper may come into contact with the heating element and catch fire. Do not place greaseproof paper loosely over accessories during preheating. Always weight down the greaseproof paper with a dish or a baking tin. Only cover the surface required with greaseproof paper. Greaseproof paper must not protrude over the accessories.

Risk of burns!

- The appliance becomes very hot. Never touch the interior surfaces of the cooking compartment or the heating elements. Always allow the appliance to cool down. Keep children at a safe distance.
- Accessories and ovenware become very hot. Always use oven gloves to remove accessories or ovenware from the cooking compartment.
- Alcoholic vapours may catch fire in the hot cooking compartment. Never prepare food containing large quantities of drinks with a high alcohol content. Only use small quantities of drinks with a high alcohol content. Open the appliance door with care.

Risk of scalding!

- The accessible parts become hot during operation. Never touch the hot parts. Keep children at a safe distance.
- When you open the appliance door, hot steam may escape. Open the appliance door with care. Keep children at a safe distance.
- Water in a hot cooking compartment may create hot steam. Never pour water into the hot cooking compartment.

Risk of injury!

Scratched glass in the appliance door may develop into a crack. Do not use a glass scraper, sharp or abrasive cleaning aids or detergents.

Risk of electric shock!

- Incorrect repairs are dangerous. Repairs may only be carried out by one of our trained after-sales engineers. If the appliance is faulty, unplug the mains plug or switch off the fuse in the fuse box. Contact the after-sales service.
- The cable insulation on electrical appliances may melt when touching hot parts of the appliance. Never bring electrical appliance cables into contact with hot parts of the appliance.
- Do not use any high-pressure cleaners or steam cleaners, which can result in an electric shock.
- When replacing the cooking compartment bulb, the bulb socket contacts are live. Before replacing the bulb, unplug the appliance from the mains or switch off the circuit breaker in the fuse box.
- A defective appliance may cause electric shock. Never switch on a defective appliance. Unplug the appliance from the mains or switch off the circuit breaker in the fuse box. Contact the after-sales service.

Causes of damage

Caution!

- Accessories, foil, greaseproof paper or ovenware on the cooking compartment floor: do not place accessories on the cooking compartment floor. Do not cover the cooking compartment floor with any sort of foil or greaseproof paper. Do not place ovenware on the cooking compartment floor if a temperature of over 50 °C has been set. This will cause heat to accumulate. The baking and roasting times will no longer be correct and the enamel will be damaged.
- Water in a hot cooking compartment: do not pour water into the cooking compartment when it is hot. This will cause steam. The temperature change can cause damage to the enamel.
- Moist food: do not store moist food in the cooking compartment when it is closed for prolonged periods This will damage the enamel.
- Fruit juice: when baking particularly juicy fruit pies, do not pack the baking tray too generously. Fruit juice dripping from the baking tray leaves stains that cannot be removed. If possible, use the deeper universal pan.
- Cooling with the appliance door open: only allow the cooking compartment to cool when it is closed. Even if the appliance door is only open a little, front panels of adjacent units could be damaged over time.
- Very dirty door seal: If the door seal is very dirty, the appliance door will no longer close properly when the appliance is in use. The fronts of adjacent units could be damaged.Always keep the door seal clean.
- Appliance door as a seat, shelf or worktop: Do not sit on the appliance door, or place or hang anything on it. Do not place any cookware or accessories on the appliance door.
- Inserting accessories: depending on the appliance model, accessories can scratch the door panel when closing the appliance door. Always insert the accessories into the cooking compartment as far as they will go.
- Carrying the appliance: do not carry or hold the appliance by the door handle. The door handle cannot support the weight of the appliance and could break.

Your new oven

Here you will learn about your new oven. The control panel and the individual operating controls are explained. You will find information on the cooking compartment and the accessories.

Control panel

Here, you will see an overview of the control panel. All of the symbols never appear in the display at the same time. Depending on the appliance model, individual details may differ.

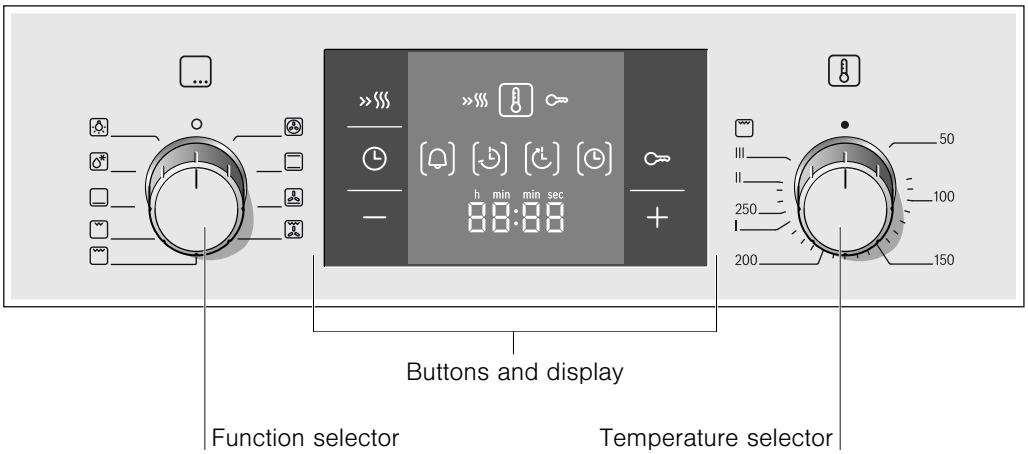

Control knobs

The control knobs are retractable. To lock it in or out, press the control knob in the off position.

Buttons

The sensors are located under the individual buttons. They must not be pressed too firmly. Only touch the corresponding symbol.

Buttons and display

You can use the buttons to set various additional functions. You can read the values that you have set in the display.

Button		Use
»§§§	Rapid heating	Heats up the oven particularly quickly.
◷	Time-setting options	Selects the timer 🔔, cooking time, end time and clock ◷.
⊶	Childproof lock	Locks and unlocks the control panel.
–	Minus	Decreases the set values.
+	Plus	Increases the set values.

The time-setting option that is currently selected in the display is indicated by the brackets [ ] around the corresponding symbol. Exception: for the clock, the ◷ symbol only lights up when you are making changes.

Function selector

Use the function selector to set the type of heating.

Setting		Use
o	Off position	The oven switches off.
	3D hot air*	For cakes and pastries on one to three levels. The fan distributes the heat from the heating ring in the back panel evenly around the cooking compartment.

* Type of heating used to determine the energy efficiency class in accordance with EN50304.

Setting		Use
	Top/bottom heating	For cakes, bakes and lean joints of meat (e.g. beef or game) on one level. Heat is emitted evenly from the top and bottom.
	Pizza setting	For the quick preparation of frozen products without preheating, e.g. pizza, chips or strudel. The bottom heating element and the ring heating element in the back panel heat up.
	Hot air grilling	For roasting meat, poultry and whole fish. The grill element and the fan switch on and off alternately. The fan causes the hot air to circulate around the dish.
	Grill, large area	For grilling steaks, sausages, bread and pieces of fish. The whole area below the grill heating element becomes hot.
	Grill, small area	For grilling small amounts of steaks, sausages, bread and pieces of fish. The centre part of the grill element becomes hot.
	Bottom heating	For preserving, browning and final baking stage. The heat is emitted from below.
	Defrost	For defrosting, e.g. meat, poultry, bread and cakes. The fan causes the warm air to circulate around the dish.
	Oven light	Switches on the oven light.

* Type of heating used to determine the energy efficiency class in accordance with EN50304.

When you make settings, the oven light in the cooking compartment switches on.

Temperature selector

The temperature selector is used to set the temperature or grill setting.

Setting		Meaning
●	Off position	The oven does not heat up.
50-270	Temperature range	The temperature in the cooking compartment in °C.
I, II, III	Grill settings	The grill settings for the small and large area grills. I = setting 1, low II = setting 2, medium III = setting 3, high

When the oven is heating, the symbol lights up in the display. It goes out during pauses in the heating. For the Defrost type of heating, the symbol does not light up.

Cooking compartment

The oven light is located in the cooking compartment. A cooling fan protects the oven from overheating.

Oven light

During operation, the oven light in the cooking compartment is on. The setting on the function selector can be used to switch on the light without heating the oven.

Cooling fan

The cooling fan switches on and off as required. The hot air escapes above the door. Caution: do not cover the ventilation slots. Otherwise the oven will overheat.

So that the cooking compartment cools down more quickly after operation, the cooling fan continues to run for a certain period afterwards.

Your accessories

The accessories supplied with your appliance are suitable for making many meals. Ensure that you always insert the accessories into the cooking compartment the right way round.

There is also a selection of optional accessories, with which you can improve on some of your favourite dishes, or simply to make working with your oven more convenient.

Inserting accessories

You can insert the accessories into the cooking compartment at 5 different levels. Always insert them as far as they will go so that the accessories do not touch the door panel.

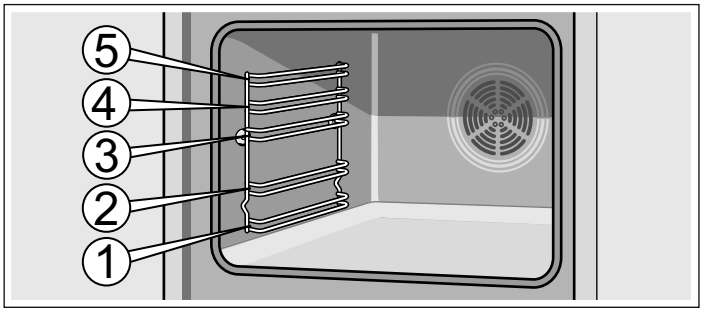

The accessories can be pulled out approximately halfway until they lock in place. This allows dishes to be removed easily.

When sliding the accessories into the cooking compartment, ensure that the indentation is at the back. They can only lock in place from this position.

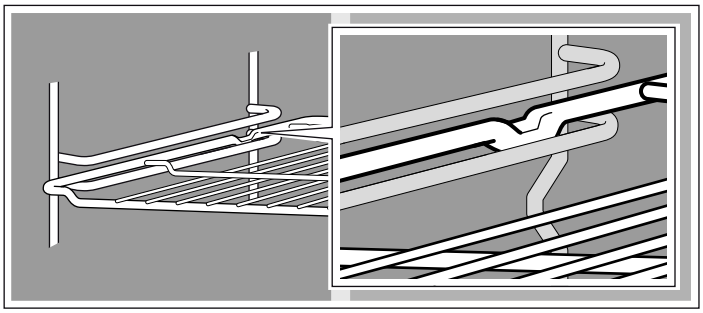

Note: The accessories may deform when they become hot. Once they cool down again, they regain their original shape. This does not affect their operation.

You can buy accessories from the after-sales service, from specialist retailers or online. Please specify the HEZ number.

	Wire rack For ovenware, cake tins, joints, grilled items and frozen meals. Insert the wire rack with the open side facing the oven door and the curvature pointing downwards.
	Enamel baking tray For cakes and biscuits. Slide in the baking tray with the sloping edge facing the oven door.
	Universal pan For moist cakes, pastries, frozen meals and large roasts. It can also be used to catch dripping fat when you are grilling directly on the wire rack. Slide in the universal pan with the sloping edge facing the oven door.

Optional accessories

You can purchase optional accessories from the after-sales service or specialist retailers. You will find a comprehensive range of products for your oven in our brochures and on the Internet. The availability of optional accessories and the option for ordering these online varies from country to country. Please see the sales brochures for more details.

Not all optional accessories are suitable for every appliance. When purchasing, please always quote the exact designation (E-no.) of your appliance.

Optional accessories	HEZ number	Use
Wire rack	HEZ334000	For ovenware, cake dishes, joints, grilled items and frozen meals.
Enamel baking tray	HEZ331003	For cakes and biscuits. Push the baking tray into the oven with the sloping edge facing towards the oven door.
universal pan	HEZ332003	For moist cakes, baked items, frozen meals and large joints. It can also be used to catch dripping fat when grilling directly on the wire rack. Slide the universal pan into the oven with the sloping edge facing the oven door.
Wire insert	HEZ324000	For roasting. Always place the wire rack in the universal pan. This ensures that dripping fat and meat juices are collected.
Grill tray	HEZ325000	Use for grilling in place of the wire rack or as a splatter guard, so that the oven does not become as dirty as it otherwise might. Only use the grill tray in the universal pan. Grilling on the grill tray: only use at shelf position 1, 2 and 3. Using the grill tray as a splatter guard: insert the universal pan with the grill tray under the wire rack.
Pizza tray	HEZ317000	Ideal for pizza, frozen products or large round cakes. You can use the pizza tray instead of the universal pan. Place the baking tray on the wire rack and proceed according to the details in the tables.
Bakestone	HEZ327000	The bakestone is perfect for preparing home-made bread, bread rolls and pizzas which require a crispy base. The bakestone must always be preheated to the recommended temperature.
Enamel baking tray with non-stick coating	HEZ331011	Cakes and biscuits can be removed more easily from the baking tray. Push the baking tray into the oven with the sloping edge facing towards the oven door.
Universal pan with non-stick coating	HEZ332011	Moist cakes, baked items, frozen meals and large joints can be removed more easily from the universal pan. Slide the universal pan into the oven with the sloping edge facing the oven door.
Profi extra-deep pan with wire insert	HEZ333003	Ideally suited for preparing large amounts.
Lid for the Profi extra-deep pan	HEZ333001	The lid converts the Profi extra-deep pan into the Profi roasting dish.
Glass roasting dish	HEZ915001	The glass roasting dish is suitable for stews and bakes that are cooked in the oven. It is ideally suited to automatic programmes or automatic roasting.
Telescopic shelves		
2-level	HEZ338250	The pull-out rails fitted at positions 2 and 3 allow you to pull accessories out further without them tipping.
3-level	HEZ338352	The pull-out rails fitted at positions 1, 2 and 3 allow you to pull accessories out further without them tipping. The 3-level pull-out is not suitable for appliances that have a rotary spit.
3-level complete pull-out	HEZ338356	The pull-out rails fitted at positions 1, 2 and 3 allow you to pull accessories out fully without them tipping. The 3-level complete pull-out is not suitable for appliances that have a rotary spit.
3-level complete pull-out with stop function	HEZ338357	The pull-out rails fitted at positions 1, 2 and 3 allow you to pull accessories out fully without them tipping. The pull-out rails lock in position allowing accessories to be easily placed on top. The 3-level complete pull-out with stop function is not suitable for appliances that have a rotary spit.
Self-cleaning side walls		
Appliance with an oven light	HEZ339020	You can retrofit side walls so that the cooking compartment automatically cleans itself during operation.
Appliances with an oven light and automatic roasting	HEZ339020	You can retrofit side walls so that the cooking compartment automatically cleans itself during operation.

Optional accessories	HEZ number	Use
Self-cleaning oven ceiling and side walls		
Appliances with one oven light and a folding grill element	HEZ329020	You can retrofit the ceiling and side walls so that the cooking compartment automatically cleans itself during operation.
Appliances with two oven lights and a folding grill element	HEZ329022	You can retrofit the ceiling and side walls so that the cooking compartment automatically cleans itself during operation.
Appliances with one oven light, a folding grill element and a meat thermometer	HEZ329027	You can retrofit the ceiling and side walls so that the cooking compartment automatically cleans itself during operation.
Steam filter	HEZ329000	You can retrofit this to your oven. The steam filter filters out grease particles from the exhaust air, thereby reducing odours. Only for appliances with a 6, 7 or 8 as the second digit in the E-no.(e.g. HBA38B750)
System steamer	HEZ24D300	For a gentler preparation of vegetables and fish.

After-sales service products

You can obtain suitable care and cleaning agents and other accessories for your domestic appliances from the after-sales service, specialist retailers or (in some countries) online via the e-Shop. Please specify the relevant product number.

Cleaning cloths for stainless-steel surfaces	Product no. 311134	Reduces the build-up of dirt. Impregnated with a special oil for perfect maintenance of your appliance's stainless-steel surfaces.
Oven and grill cleaning gel	Product no. 463582	For cleaning the cooking compartment. The gel is odourless.
Microfibre cloth with honeycomb structure	Product no. 460770	Especially suitable for cleaning delicate surfaces, such as glass, glass ceramic, stainless steel or aluminium. The microfibre cloth removes liquid and grease deposits in one go.
Door lock	Product no. 612594	To prevent children from opening the oven door. The locks on different types of appliance door are screwed in differently. See the information sheet supplied with the door lock.

Before using the oven for the first time

In this section, you can find out what you must do before using your oven to prepare food for the first time. First read the section on *Safety information*.

Setting the clock

After the appliance has been connected, the ◷ symbol and four zeros flash in the display. Set the clock.

1. Press the ◷ button.
The clock in the display shows 12:00. The time symbols light up and the brackets are around ◷.

2. Use the **+** or **−** button to set the clock.

After a few seconds, the time that has been set is adopted.

Heating up the oven

To remove the new cooker smell, heat up the oven when it is empty and closed. An hour of Top/bottom heating ⊟ at 240 °C is ideal for this purpose. Ensure that no packaging remnants have been left in the cooking compartment.

1. Use the function selector to set Top/bottom heating ⊟.

2. Set the temperature selector to 240 °C.

After an hour, switch off the oven. To do so, turn the function selector to the off position.

Cleaning the accessories

Before you use the accessories for the first time, clean them thoroughly with hot soapy water and a soft dish cloth.

Setting the oven

There are various ways in which you can set your oven. Here we will explain how you can select the desired type of heating and temperature or grill setting. You can select the oven cooking time and end time for your dish. Please refer to the section on *Setting the time-setting options*.

Type of heating and temperature

Example in the picture: ⊟ Top/bottom heating at 190 °C.

1. The function selector is used to set the type of heating.

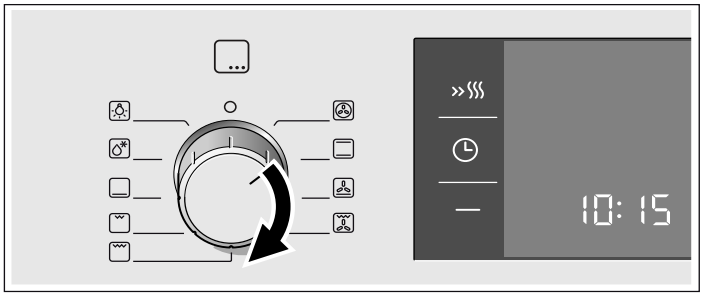

2. Set the temperature or grill setting using the temperature selector.

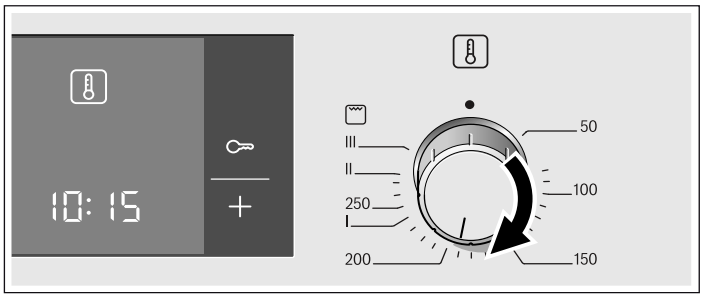

The oven begins to heat up.

Switching off the oven

Turn the function selector to the off position.

Changing the settings

The type of heating and temperature or grill setting can be changed at any time using their respective selectors.

Rapid heating

With rapid heating, your oven reaches the temperature selected particularly quickly.

Use rapid heating when temperatures above 100 °C are selected. The following types of heating are suitable:

- 3D hot air
- Top/bottom heating
- Pizza setting

To ensure an even cooking result, do not place your dish in the cooking compartment until rapid heating is complete.

1. Set the type of heating and temperature.

2. Press the »⋯ button.

The »⋯ symbol lights up in the display. The oven begins to heat up.

The rapid heating process is complete

A signal sounds. The »⋯ symbol in the display goes out. Put your dish in the oven.

Cancelling rapid heating

Press the »⋯ button. The »⋯ symbol in the display goes out.

Setting the time-setting options

Your oven has various time-setting options. You can use the ◷ button to call up the menu and switch between the individual functions. All the time symbols are lit when you can make settings. The brackets [ ] show you which time-setting option you have currently selected. A time-setting option which has already been set can be changed directly with the **+** or **–** button when the relevant time symbol is in brackets.

Timer

You can use the timer as a kitchen timer. It runs independently of the oven. The timer has its own signal. In this way, you can tell whether it is the timer or a cooking time which has elapsed.

1. Press the ◷ button once.
The time symbols light up in the display and the brackets are around 🔔.

2. Use the **+** or **–** button to set the timer duration.
Default value for **+**button = 10 minutes
Default value for **–**button = 5 minutes

After a few seconds, the time setting is adopted. The timer starts. The [🔔] symbol lights up in the display and the timer duration counts down. The other time symbols go out.

The timer duration has elapsed

A signal sounds. 00:00 is shown in the display. Use the ◷ button to switch off the timer.

Changing the timer duration

Use the **+** or **–** button to change the timer duration. After a few seconds, the change is adopted.

Cancelling the timer duration

Use the **–** button to reset the timer duration to 00:00. The change will be adopted after a few seconds. The timer is switched off.

Checking the time settings

If several time-setting options are set, the relevant symbols are illuminated on the display. The symbol for the time-setting option that is visible in the display is shown in brackets.

To call up the 🔔 timer, cooking time, end time or ◷ clock, press the ◷ button repeatedly until the brackets are around the relevant symbol. The display shows the value for a few seconds.

Cooking time

The cooking time for your dish can be set on the oven. When the cooking time has elapsed, the oven switches itself off automatically. This means that you do not have to interrupt other work to switch off the oven. The cooking time cannot be accidentally exceeded.

Example in the picture: cooking time 45 minutes.

1. Use the function selector to set the type of heating.
2. Set the temperature or grill setting using the temperature selector.
3. Press the ◷ button twice.
   00:00 is shown in the display. The time symbols light up and the brackets are around ◷.

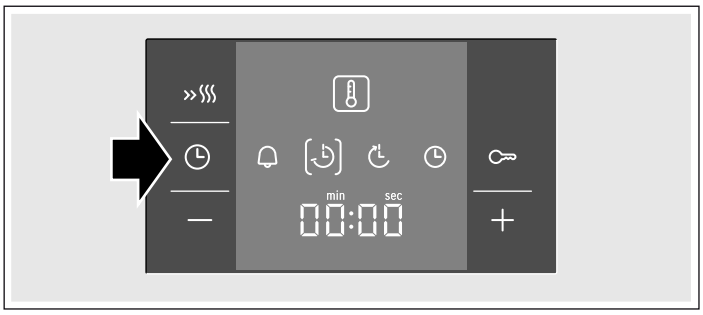

4. Use the **+** or **–** button to set the cooking time.
   Default value for **+** button = 30 minutes
   Default value for **–** button = 10 minutes

The oven will start up after a few seconds. The cooking time counts down in the display and the [◷] symbol lights up. The other time symbols go out.

The cooking time has elapsed

A signal sounds. The oven stops heating. 00:00 is shown in the display. Press the ◷ button. You can set a new cooking time using the **+** or **–** button. Or press the ◷ button twice and turn the function selector to the off position. The oven switches off.

Changing the cooking time

Use the **+** or **–** button to change the cooking time. After a few seconds, the change is adopted. If the timer has been set, press the ◷ button beforehand.

Cancelling the cooking time

Use the **–** button to reset the cooking time to 00:00. After a few seconds, the change is adopted. The cooking time is cancelled. If the timer has been set, press the ◷ button beforehand.

Checking the time settings

If several time-setting options are set, the relevant symbols are illuminated on the display. The symbol for the time-setting option that is visible in the display is shown in brackets.

To call up the 🔔 timer, ◷ cooking time, ◷ end time or ◷ clock, press the ◷ button repeatedly until the brackets are around the relevant symbol. The display shows the value for a few seconds.

End time

You can change the time at which you wish your dish to be ready. The oven starts automatically and finishes at the desired time. You can, for example, put your dish in the cooking compartment in the morning and set the cooking time so that it is ready at lunch time.

Ensure that food is not left in the cooking compartment for too long as it may spoil.

Example in the picture: it is 10:30 am, the cooking time is 45 minutes and the oven is required to finish cooking at 12:30 pm.

1. Adjust the function selector.
2. Set the temperature selector.
3. Press the ◷ button twice.
4. Use the **+** or **–** button to set the cooking time.
5. Press the ◷ button.
   The brackets are around ◷. The time when the dish will be ready is displayed.

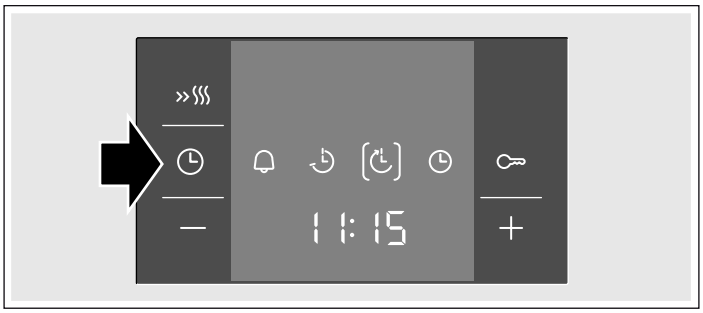

6. Use the **+** or **–** button to set a later end time.

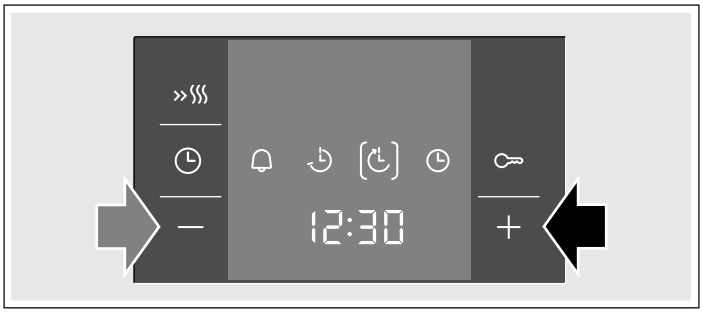

After a few seconds, the oven adopts the settings and switches to standby position. The time at which the dish will be ready is shown in the display and the ◷ symbol is in brackets. The 🔔 and ◷ symbols go out. When the oven starts, you can see the cooking time counting down in the display and the ◷ symbol is in brackets. The ◷ symbol goes out.

The cooking time has elapsed

A signal sounds. The oven stops heating. 00:00 is shown in the display. Press the ◷ button. You can set a new cooking time using the **+** or **–** button. Or press the ◷ button twice and turn the function selector to the off position. The oven switches off.

Changing the end time

Use the **+** or **–** button to change the end time. After a few seconds, the change is adopted. If the timer has been set, first press the ◷ button twice. Do not change the end time if the cooking time has already started to elapse. The cooking result would no longer be correct.

Cancelling the end time

Use the **–** button to reset the end time to the current time. After a few seconds, the change is adopted. The oven starts. If the timer has been set, first press the ◷ button twice.

Checking the time settings

If several time-setting options are set, the relevant symbols are illuminated on the display. The symbol for the time-setting option that is visible in the display is shown in brackets.

To call up the timer, cooking time, end time or clock, press the button repeatedly until the brackets are around the relevant symbol. The display shows the value for a few seconds.

Clock

After the appliance is connected or following a power cut, the symbol and four zeros flash in the display. Set the clock.

1. Press the button.
   The clock in the display shows 12:00. The time symbols light up and the brackets are around .
2. Use the + or − button to set the clock.

After a few seconds, the time that has been set is adopted.

Changing the clock

No other time-setting option should have been set.

1. Press the button four times.
   The time symbols light up in the display and the brackets are around .
2. Use the + or − button to change the clock.

After a few seconds, the time that has been set is adopted.

Hiding the clock

You can hide the clock. For more information, please refer to the section *Changing the basic settings*.

Childproof lock

The oven has a childproof lock to prevent children switching it on accidentally.

The oven will not react to any settings. The timer and clock can also be set when the childproof lock has been activated.

If the type of heating and temperature or grill setting have been set, the childproof lock interrupts the heating.

Activating the childproof lock
No cooking time or end time should have been set.

Press and hold the button for approx. four seconds.

The symbol appears in the display. The childproof lock is activated.

Deactivating the childproof lock
Press and hold the button for approx. four seconds.

The symbol goes out in the display. The childproof lock is deactivated.

Changing the basic settings

Your oven has various basic settings. These settings can be customised to suit your requirements.

Basic setting	Selection 1	Selection 2	Selection 3
c1 Clock display	always*	only with the button	-
c2 Signal duration upon completion of a cooking time or timer period	approx. 10 seconds	approx. 2 minutes*	approx. 5 minutes
c3 Waiting time until a setting is applied	approx. 2 seconds	approx. 5 seconds*	approx. 10 seconds

* Factory setting

No other time-setting option should have been set.

1. Press and hold the button for approx. 4 seconds.
   The current basic setting for the clock display is shown in the display, e.g. c1 1 for selection 1.
2. Use the + or − button to change the basic setting.
3. Confirm by pressing the button.
   The next basic setting appears in the display. You can scroll through all levels with the button and change the setting with the + or − button.
4. To finish, press and hold the button for approx. 4 seconds.

All basic settings are applied.

You may change the basic settings at any time.

Care and cleaning

With good care and cleaning, your oven will remain clean and fully-functioning for a long time to come. Here we will explain how to maintain and clean your oven correctly.

Notes

- Slight differences in the colours on the front of the oven are caused by the use of different materials, such as glass, plastic and metal.
- Shadows on the door panel which look like streaks, are caused by reflections made by the oven light.
- Enamel is baked on at very high temperatures. This can cause some slight colour variations. This is normal and does not affect their function. The edges of thin trays cannot be completely enamelled. As a result, these edges can be rough. This will not impair the anti-corrosion protection.

Cleaning agents

To ensure that the different surfaces are not damaged by using the wrong type of cleaning agent, observe the information in the table. Do not use

- harsh or abrasive cleaning agents,
- cleaning agents with a high concentration of alcohol,
- hard scouring pads or sponges,
- high-pressure cleaners or steam cleaners.

Wash new sponge cloths thoroughly before use.

Area	Cleaning agents
Oven front	Hot soapy water: Clean with a dish cloth and dry with a soft cloth. Do not use glass cleaners or glass scrapers.
Stainless steel	Hot soapy water: Clean with a dish cloth and dry with a soft cloth. Remove traces of limescale, grease, starch and albumin (e.g. egg white) immediately. Corrosion can form under such residues. Special stainless steel cleaning products suitable for hot surfaces are available from our after-sales service or from specialist retailers. Apply a very thin layer of the cleaning product with a soft cloth.
Door panels	Glass cleaner: Clean with a soft cloth. Do not use a glass scraper.
Glass cover for the oven light	Hot soapy water: Clean with a dish cloth.
Seal Do not remove.	Hot soapy water: Clean with a dish cloth. Do not scour.
Rails	Hot soapy water: Soak and clean with a dish cloth or brush.
Telescopic shelves	Hot soapy water: Clean with a dish cloth or a brush. Do not remove the lubricant while the pull-out rails are pulled out – it is best to clean them when they are inserted. Do not soak or clean in the dishwasher.
Accessories	Hot soapy water: Soak and clean with a dish cloth or brush.

Cleaning the self-cleaning surfaces in the cooking compartment

The back wall in the cooking compartment is coated with a highly porous ceramic layer. This coating absorbs and disintegrates splashes from baking and roasting while the oven is in operation. The higher the temperature and the longer the oven is in operation, the better the result will be.

If splashes are still visible even after repeated use, proceed as follows:

1. Clean the floor, ceiling and side panels of the cooking compartment thoroughly.
2. Set 3D hot air.
3. With the door closed, heat up the empty oven for approximately 2 hours at maximum temperature.

The ceramic coating is regenerated. When the cooking compartment has cooled down, remove the brown or white residue with water and a soft sponge.

Light discolouration of the coating does not affect automatic self-cleaning.

Caution!

- Never use abrasive cleaning agents. You will scratch or destroy the highly porous coating.
- Never treat the ceramic coating with oven cleaner. If oven cleaner accidentally gets onto it, remove it immediately with a sponge and plenty of water.

Cleaning the cooking compartment floor, ceiling and side walls

Use a dish cloth and hot soapy water or a vinegar solution.

If there are heavy deposits of dirt, use a stainless steel scouring pad or oven cleaner. Only use when the cooking compartment is cold. Never treat the self-cleaning surfaces with a scouring pad or oven cleaner.

Detaching and refitting the rails

The rails can be removed for cleaning. The oven must have cooled down.

Detaching the rails

1. Lift up the front of the rail
2. and unhook it (figure A).
3. Then pull the whole rail forward
4. and remove it (Fig. B).

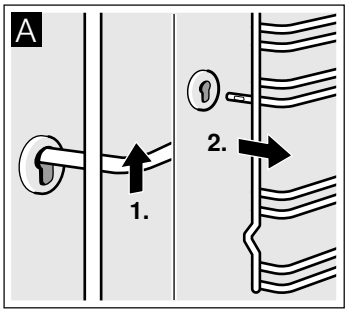

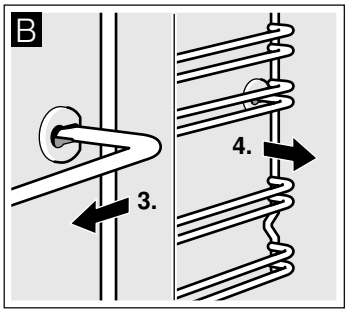

Clean the rails with cleaning agent and a sponge. For stubborn deposits of dirt, use a brush.

Refitting the rails

1. First insert the rail into the rear socket, press it to the back slightly (figure A),
2. and then hook it into the front socket (figure B).

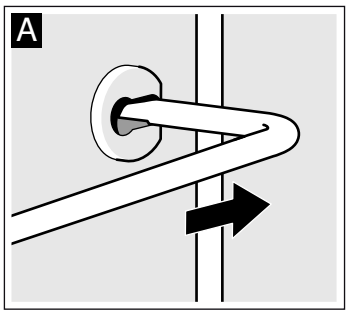

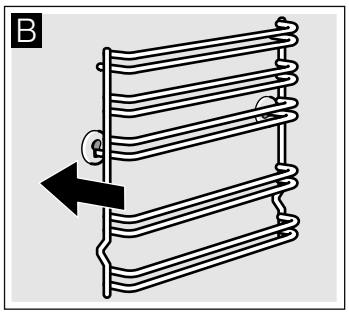

The rails fit both the left and right sides. Ensure that, as shown in figure B, levels 1 and 2 are below and levels 3, 4 and 5 are above.

Folding down the grill element

You can fold down the grill element to clean the ceiling.

⚠ Risk of burns!

The oven must be cold.

1. Hold the grill element and pull the handle forwards until it clicks audibly in place (figure A).
2. Fold the grill element downwards (figure B).

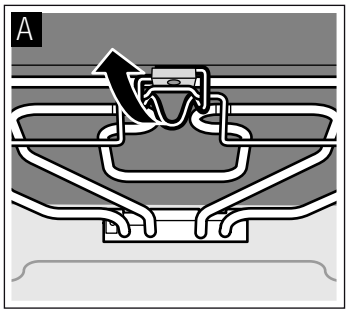

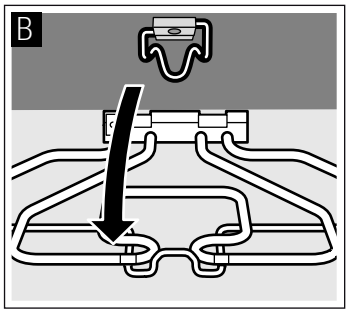

3. After cleaning, fold the grill element back up and hold it.
4. Pull the handle downwards until it clicks audibly into place.

Detaching and attaching the oven door

For cleaning purposes and to remove the door panels, you can detach the oven door.

The oven door hinges each have a locking lever. When the locking levers are closed (figure A), the oven door is secured in place. It cannot be detached. When the locking levers are open in order to detach the oven door (Fig. B), the hinges are locked. They cannot snap shut.

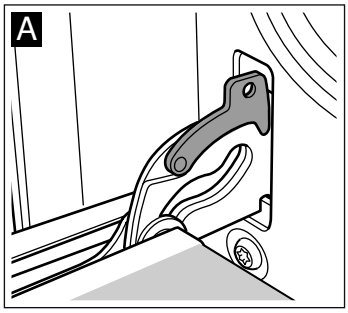

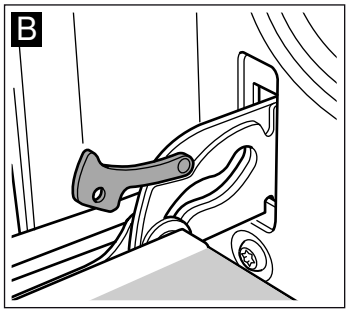

⚠ Risk of injury!

Whenever the hinges are not locked, they snap shut with great force. Ensure that the locking levers are always fully closed or, when detaching the oven door, fully open.

Detaching the door

1. Open the oven door fully.
2. Fold up the two locking levers on the left and right (figure A).
3. Close the oven door as far as the limit stop. With both hands, grip the door on the left and right-hand sides. Close the door a little further and pull it out (figure B).

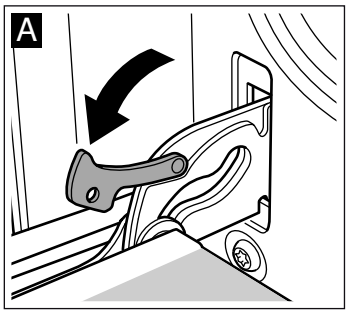

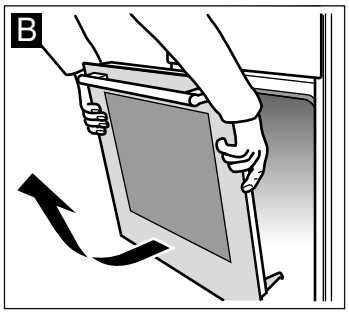

Attaching the door

Reattach the oven door in the reverse sequence to removal.

1. When attaching the oven door, ensure that both hinges are inserted straight into the opening (figure A).
2. The notch on the hinge must engage on both sides (figure B).

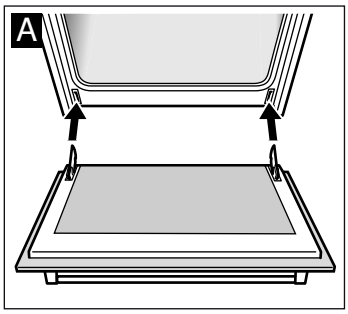

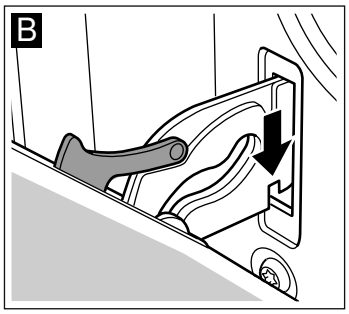

3. Fold back both locking levers (figure C). Close the oven door.

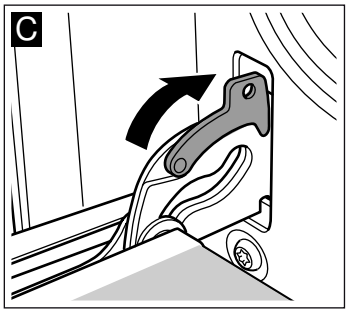

⚠ Risk of injury!

If the oven door falls out accidentally or a hinge snaps shut, do not reach into the hinge. Call the after-sales service.

Removing and installing the door panels

To facilitate cleaning, you can remove the glass panels from the oven door.

Removal

1. Detach the oven door and lay it on a cloth with the handle facing down.
2. Pull off the cover at the top of the oven door. Press in the tabs on the left and right using your fingers (fig. A).
3. Lift the top panel up and pull it out (fig. B).

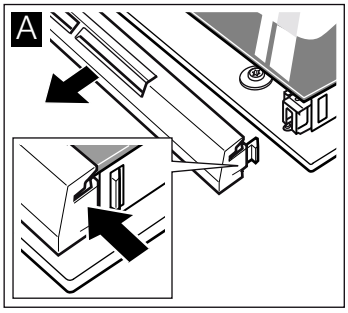

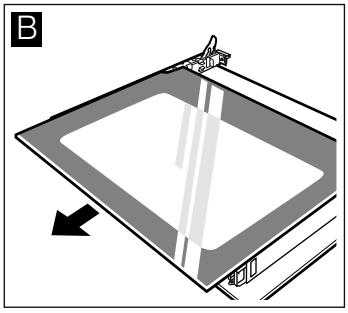

4. Lift the panel up and pull it out (fig. C).

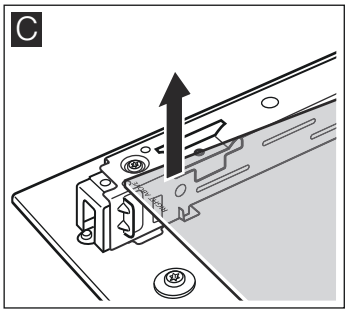

Clean the panels with glass cleaner and a soft cloth.

⚠ **Risk of injury!**

Scratched glass in the appliance door may develop into a crack. Do not use a glass scraper, sharp or abrasive cleaning aids or detergents.

Installation

During installation, make sure that the lettering "top right" is upside down at the bottom left.

1. Insert the panel at an angle towards the back (fig. A).
2. Insert the top panel at an angle towards the back into the brackets. The smooth surface must face outwards. (fig. B).

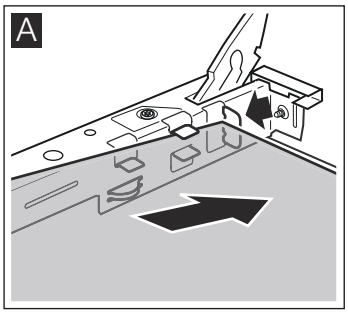

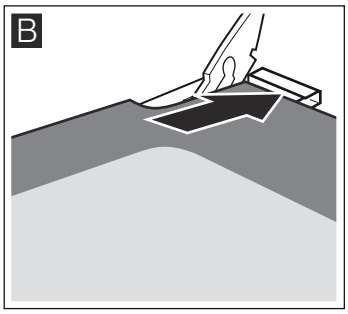

3. Put the cover back in place and press on it.
4. Attach the oven door.

Do not use the oven again until the panels have been correctly installed.

Troubleshooting

Malfunctions often have simple explanations. Refer to the table before calling the after-sales service as you may be able to remedy the fault yourself.

Malfunction table

If a dish does not turn out as well as you had hoped, refer to the section *Tested for you in our cooking studio*, where you will find plenty of cooking tips and notes.

Problem	Possible cause	Remedy/information
The oven does not work.	The circuit breaker is defective.	Look in the fuse box and check that the circuit breaker is in working order.
	Power cut	Check whether the kitchen light or other kitchen appliances are working.
◷ and zeros flash in the display.	Power cut	Reset the clock.
The oven does not heat up.	There is dust on the contacts.	Turn the control knobs back and forth several times.

Error messages

If an error message with E appears, press the ◷ button. The message disappears. A time function that has been set is cleared. If the error message does not disappear, please contact the after-sales service.

You can take remedial action yourself if the following error message is displayed.

Error message	Possible cause	Remedy/information
E011	A button was depressed for too long or is covered up.	Press all buttons individually. Check whether any buttons are jammed, covered up or soiled.

⚠ **Risk of electric shock!**

Incorrect repairs are dangerous. Repairs may only be carried out by one of our trained after-sales engineers.

Replacing the bulb in the oven ceiling light

If the bulb in the oven light fails, it must be replaced. Heat-resistant, 40 watt spare bulbs can be obtained from our after-sales service or a specialist retailer. Only use these bulbs.

⚠ **Risk of electric shock!**

Switch off the circuit breaker in the fuse box.

1. Place a tea towel in the oven when it is cold to prevent damage.
2. Unscrew the glass cover by turning it anti-clockwise.

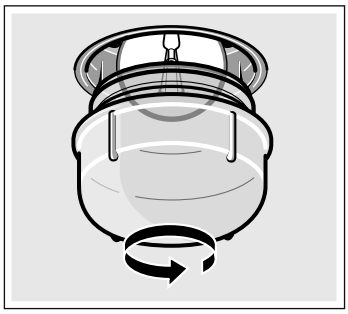

3. Replace the bulb with one of the same type.
4. Screw the glass cover back in.
5. Remove the tea towel and switch on the circuit breaker.

Glass cover

You must replace a damaged glass cover. Suitable glass covers may be obtained from the after-sales service. Please specify the E number and FD number of your appliance.

After-sales service

Our after-sales service is there for you if your appliance needs to be repaired. We will always find the right solution in order to avoid unnecessary visits from a service technician.

E number and FD number

When calling us, please give the product number (E no.) and the production number (FD no.) so that we can provide you with the correct advice. The rating plate containing these numbers can be found on the right-hand side of the oven door. You can make a note of the numbers of your appliance and the telephone number of the after-sales service in the space below to save time should it be required.

E no.	**FD no.**
After-sales service ☏	

Please note that there will be a fee for a visit by a service technician in the event of a malfunction, even during the warranty period.

Please find the contact data of all countries in the enclosed customer service list.

To book an engineer visit and product advice

GB 0844 8928979
Calls from a BT landline will be charged at up to 3 pence per minute. A call set-up fee of up to 6 pence may apply.

IE 01450 2655
0.03 € per minute at peak. Off peak 0.0088 € per minute.

Trust the expertise of the manufacturer, and rest assured that the repair will be carried out by trained service technicians using original spare parts for your domestic appliance.

Energy and environment tips

Here you can find tips on how to save energy when baking and roasting and how to dispose of your appliance properly.

Saving energy

- Only preheat the oven if this is specified in the recipe or in the operating instruction tables.
- Use dark, black lacquered or enamelled baking tins. They absorb the heat particularly well.
- Open the oven door as infrequently as possible while you are cooking, baking or roasting.
- It is best to bake several cakes one after the other. The oven is still warm. This reduces the baking time for the second cake. You can also place two loaf tins next to each other.
- For longer cooking times, you can switch the oven off 10 minutes before the end of the cooking time and use the residual heat to finish cooking.

Environmentally-friendly disposal

Dispose of packaging in an environmentally-friendly manner.

This appliance is labelled in accordance with European Directive 2012/19/EU concerning used electrical and electronic appliances (waste electrical and electronic equipment - WEEE). The guideline determines the framework for the return and recycling of used appliances as applicable throughout the EU.

Tested for you in our cooking studio

Here you will find a selection of dishes and the ideal settings for them. We will show you which type of heating and which temperature are best suited for your dish. You can find information about suitable accessories and the height at which they should be inserted. There are also tips about cookware and preparation methods.

Notes

- The values in the table always apply to dishes placed into the cooking compartment when it is cold and empty.

  Only preheat the appliance if the table specifies that you should do so. Do not line the accessories with greaseproof paper until after they have been preheated.
- The times specified in the tables are guidelines only. They will depend on the quality and composition of the food.
- Use the accessories supplied. Additional accessories may be obtained as special accessories from specialist retailers or from the after-sales service.

  Before using the oven, remove any unnecessary accessories and ovenware from the cooking compartment.
- Always use oven gloves when taking hot accessories or ovenware out of the cooking compartment.

Cakes and pastries

Baking on one level

When baking cakes, the best results can be achieved using ⊟ Top/bottom heating.

When baking with ⊛ 3D hot air, use the following shelf heights for the accessory:

- Cakes in tins: level 2
- Cakes on trays: level 3

Baking on two or more levels

Use ⊛ 3D hot air.

Shelf heights for baking on 2 levels:

- Universal pan: level 3
- Baking tray: level 1

Shelf heights for baking on 3 levels:

- Baking tray: level 5
- Universal pan: level 3
- Baking tray: level 1

Baking trays that are placed in the oven at the same time will not necessarily be ready at the same time.

The tables show numerous suggestions for your dishes.

If you are baking with 3 cake/loaf tins at the same time, place these on the wire racks as indicated in the picture.

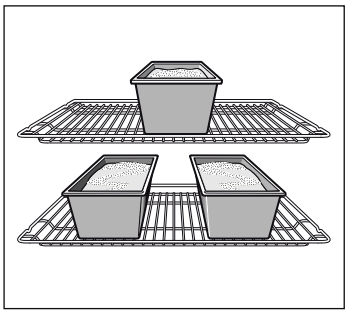

Baking tins

It is best to use dark-coloured metal baking tins.

Baking times are increased when light-coloured baking tins made of thin metal or glass dishes are used, and cakes do not brown so evenly.

If you wish to use silicone baking tins, use the information and recipes provided by the manufacturer as a guide. Silicone baking tins are often smaller than normal tins. The amount of mixture and recipe instructions may differ.

Tables

The tables show the ideal type of heating for the various cakes and pastries. The temperature and baking time depend on the amount and composition of the mixture. This is why temperature ranges are given in the tables. You should try the lower temperature first, since a lower temperature results in more even browning. You can increase the temperature next time if necessary.

If you preheat the oven, the baking time is shortened by 5 to 10 minutes.

Additional information can be found in the *Baking tips* section following the tables.

Cakes in tins	Tin	Level	Type of heating	Temperature in °C	Cooking time in minutes
Sponge cake, simple	Ring tin/round tin	2	⊛	160-180	50-60
	3 loaf tins	3+1	⊛	140-160	60-80
Sponge cake, delicate	Ring tin/round tin	2	⊟	150-170	65-75
Flan base, sponge	Flan tin	3	⊟	160-180	20-30
Delicate fruit flan, sponge	Springform/ring tin	2	⊟	160-180	50-60
Sponge base, 2 eggs (preheat)	Flan tin	2	⊟	160-180	20-30
Sponge flan, 6 eggs (preheat)	Springform cake tin	2	⊟	160-180	40-50
Shortcrust pastry base with crust	Springform cake tin	1	⊟	170-190	25-35
Fruit tart/cheesecake, pastry base*	Springform cake tin	1	⊟	170-190	70-90
Swiss flan	Pizza tray	1	⊟	220-240	35-45
Ring cake	Ring cake tin	2	⊟	150-170	60-70
Pizza, thin base with light topping (pre-heat)	Pizza tray	1	⊟	250-270	10-15
Savoury cakes*	Springform cake tin	1	⊟	180-200	45-55

* Turn off the oven and allow cakes to cool for an additional 20 minutes with the oven door closed.

Cakes on trays	Accessories	Level	Type of heating	Temperature in °C	Cooking time in minutes
Sponge with dry topping	Baking tray	2		170-190	20-30
	Universal pan + baking tray	3+1		150-170	35-45
Sponge with moist topping (fruit)	Universal pan	2		180-200	25-35
	Universal pan + baking tray	3+1		140-160	40-50
Yeast dough with dry topping	Baking tray	3		170-190	25-35
	Universal pan + baking tray	3+1		150-170	35-45
Yeast dough with moist topping (fruit)	Universal pan	3		160-180	40-50
	Universal pan + baking tray	3+1		150-170	50-60
Shortcrust pastry with dry topping	Baking tray	2		170-190	20-30
Shortcrust pastry with moist topping (fruit)	Universal pan	2		170-190	60-70
Swiss flan	Universal pan	1		210-230	40-50
Swiss roll (preheat)	Baking tray	2		170-190	15-20
Plaited loaf with 500 g flour	Baking tray	2		170-190	25-35
Stollen with 500 g flour	Baking tray	3		160-180	60-70
Stollen with 1 kg flour	Baking tray	3		140-160	90-100
Strudel, sweet	Universal pan	2		190-210	55-65
Pizza	Baking tray	2		210-230	25-35
	Universal pan + baking tray	3+1		180-200	40-50
Tarte flambée (preheat)	Universal pan	2		250-270	10-15
Börek	Universal pan	2		180-200	40-50

Small baked items	Accessories	Level	Type of heating	Temperature in °C	Cooking time in minutes
Biscuits	Baking tray	3		140-160	15-25
	Universal pan + baking tray	3+1		130-150	25-35
	2 baking trays + universal pan	5+3+1		130-150	30-40
Viennese whirls (preheat)	Baking tray	3		140-150	30-40
	Baking tray	3		140-150	30-40
	Universal pan + baking tray	3+1		140-150	30-45
	2 baking trays + universal pan	5+3+1		130-140	40-55
Macaroons	Baking tray	2		100-120	30-40
	Universal pan + baking tray	3+1		100-120	35-45
	2 baking trays + universal pan	5+3+1		100-120	40-50
Meringue	Baking tray	3		80-100	100-150
Muffins	Wire rack with muffin tray	2		170-190	20-25
	2 wire racks with muffin trays	3+1		160-180	25-35
Choux pastry	Baking tray	2		210-230	30-40
Puff pastry	Baking tray	3		180-200	20-30
	Universal pan + baking tray	3+1		180-200	25-35
	2 baking trays + universal pan	5+3+1		170-190	35-45
Leavened cake	Baking tray	2		180-200	20-30
	Universal pan + baking tray	3+1		160-180	25-35

Bread and rolls
When baking bread, preheat the oven, unless instructions state otherwise.

Never pour water into the hot oven.

Bread and rolls	Accessories	Level	Type of heating	Temperature in °C	Cooking time in minutes
Yeast bread with 1.2 kg flour	Universal pan	2	⊟	270 200	5 30-40
Sourdough bread with 1.2 kg flour	Universal pan	2	⊟	270 200	8 35-45
Flatbread	Universal pan	2	⊟	270	10-15
Bread rolls (do not preheat)	Baking tray	3	⊟	200-220	20-30
Rolls made with sweet yeast dough	Baking tray	3	⊟	180-200	15-20
	Universal pan + baking tray	3+1	⊛	160-180	20-30

Baking tips

You wish to bake according to your own recipe.	Use similar items in the baking tables as a guide.
How to establish whether sponge cake is baked through.	Approximately 10 minutes before the end of the baking time specified in the recipe, stick a cocktail stick into the cake at the highest point. If the cocktail stick comes out clean, the cake is ready.
The cake collapses.	Use less fluid next time or set the oven temperature 10 degrees lower. Observe the specified mixing times in the recipe.
The cake has risen in the middle but is lower around the edge.	Do not grease the sides of the springform cake tin. After baking, loosen the cake carefully with a knife.
The cake goes too dark on top.	Place it lower in the oven, select a lower temperature and bake the cake for a little longer.
The cake is too dry.	When it is done, make small holes in the cake using a cocktail stick. Then drizzle fruit juice or an alcoholic beverage over it. Next time, select a temperature 10 degrees higher and reduce the baking time.
The bread or cake (e.g. cheesecake) looks good, but is soggy on the inside (sticky, streaked with water).	Use slightly less fluid next time and bake for slightly longer at a lower temperature. For cakes with a moist topping, bake the base first. Sprinkle it with almonds or bread crumbs and then place the topping on top. Please follow the recipe and baking times.
The cake is unevenly browned.	Select a slightly lower temperature to ensure that the cake is baked more evenly. Bake delicate pastries on one level using ⊟ Top/bottom heating. Protruding greaseproof paper can affect the air circulation. For this reason, always cut greaseproof paper to fit the baking tray.
The bottom of a fruit cake is too light.	Place the cake one level lower the next time.
The fruit juice overflows.	Next time, use the deeper universal pan, if you have one.
Small baked items made out of yeast dough stick to one another when baking.	There should be a gap of approx. 2 cm around each item. This gives enough space for the baked items to expand well and turn brown on all sides.
You were baking on several levels. The items on the top baking tray are darker than that on the bottom baking tray.	Always use ⊛ 3D hot air to bake on more than one level. Baking trays that are placed in the oven at the same time will not necessarily be ready at the same time.
Condensation forms when you bake moist cakes.	Baking may result in the formation of water vapour, which escapes above the door. The steam may settle and form water droplets on the control panel or on the fronts of adjacent units. This is a natural process.

Meat, poultry, fish

Ovenware

You may use any heat-resistant ovenware. The universal pan is suitable for large roasts.

Glass ovenware is the most suitable. Ensure that the lid of the roasting dish fits well and closes properly.

Add a little more liquid when using enamelled roasting dishes.

With roasting dishes made of stainless steel, browning is not so intense and the meat may be somewhat less well cooked. Increase the cooking times.

Information in the tables:
Ovenware without a lid = open
Ovenware with a lid = closed

Always place the ovenware in the centre of the wire rack.

Place hot glass ovenware on a dry mat after cooking. The glass could crack if placed on a cold or wet surface.

Roasting

Add in a little liquid if the meat is lean. Cover the base of the ovenware with approx. ½ cm of liquid.

Add liquid generously for pot roasts. Cover the base of the ovenware with approx. 1 - 2 cm of liquid.

The amount of liquid depends on the type of meat and the material the ovenware is made of. If preparing meat in an enamelled roasting dish, it will need a little more liquid than if cooked in glass ovenware.

Roasting dishes made from stainless steel are not ideal. The meat cooks more slowly and browns less fully. Use a higher temperature and/or a longer cooking time.

Grilling

When grilling, preheat the oven for approx. 3 minutes, before placing the food into the cooking compartment.

Always grill with the oven door closed.

As far as possible, the pieces of food you are grilling should be of equal thickness. This will allow them to brown evenly and remain succulent and juicy.

Turn the food you are grilling after ⅔ of the time.

Do not add salt to steaks until they have been grilled.

Place the food to be grilled directly on the wire rack. If you are grilling a single piece, the best results are achieved by placing it in the centre of the wire rack.

The universal pan should also be inserted at level 1. The meat juices are collected in the pan and the oven is kept cleaner.

When grilling, do not insert the baking tray or universal pan at level 4 or 5. The high heat distorts it and the cooking compartment can be damaged when removing it.

The grill element switches on and off continually. This is normal. The grill setting determines how frequently this will happen.

Meat

Turn pieces of meat halfway through the cooking time.

When the roast is ready, turn off the oven and allow it to rest for an additional 10 minutes. This allows better distribution of the meat juices.

After cooking, wrap sirloin in aluminium foil and leave it to rest for 10 minutes in the oven.

For roast pork with a rind, score the rind in a crossways pattern, then lay the roast in the dish with the rind at the bottom.

Meat	Weight	Accessories and ovenware	Level	Type of heating	Temperature in °C, grill setting	Cooking time in minutes
Beef						
Pot-roasted beef	1.0 kg	Covered	2		210-230	100
	1.5 kg		2		200-220	120
	2.0 kg		2		190-210	140
Fillet of beef, medium	1.0 kg	Uncovered	2		210-230	60
	1.5 kg		2		200-220	80
Sirloin, medium	1.0 kg	Uncovered	1		220-240	60
Steaks, 3 cm thick, medium		Wire rack + universal pan	5+1		3	15
Veal						
Joint of veal	1.0 kg	Uncovered	2		190-210	110
	1.5 kg		2		180-200	130
	2.0 kg		2		170-190	150
Knuckle of veal	1.5 kg	Uncovered	2		210-230	140
Pork						
Joint without rind (e.g. neck)	1.0 kg	Uncovered	1		190-210	120
	1.5 kg		1		180-200	150
	2.0 kg		1		170-190	170
Joint with rind (e.g. shoulder)	1.0 kg	Uncovered	1		190-210	130
	1.5 kg		1		180-200	160
	2.0 kg		1		170-190	190
Pork fillet	500 g	Wire rack + universal pan	3+1		220-230	30
Pork joint, lean	1.0 kg	Uncovered	2		200-220	120
	1.5 kg		2		190-210	140
	2.0 kg		2		180-200	160
Smoked pork on the bone	1.0 kg	Covered	2		200-220	70
Steaks, 2 cm thick		Wire rack + universal pan	5+1		3	20
Pork medallions, 3 cm thick		Wire rack + universal pan	5+1		3	10
Lamb						
Saddle of lamb on the bone	1.5 kg	Uncovered	2		190	60
Boned leg of lamb, medium	1.5 kg	Uncovered	1		150-170	120

Meat	Weight	Accessories and ovenware	Level	Type of heating	Temperature in °C, grill setting	Cooking time in minutes
Game						
Saddle of venison on the bone	1.5 kg	Uncovered	2		200-220	50
Boned leg of roe venison	1.5 kg	Covered	2		210-230	100
Roast game	1.5 kg	Covered	2		180-200	140
Joint of venison	1.5 kg	Covered	2		180-200	130
Rabbit	2.0 kg	Covered	2		220-240	60
Minced meat						
Meat loaf	Made from 500 g meat	Uncovered	1		180-200	80
Sausages						
Sausages		Wire rack + universal pan	4+1		3	15

Poultry

The weights indicated in the table refer to oven-ready poultry (without stuffing).

Place whole poultry on the lower wire rack breast-side down. Turn after ⅔ of the specified time.

Turn roasts, such as rolled turkey joint or turkey breast, halfway through the cooking time. Turn poultry portions after ⅔ of the time.

For duck or goose, pierce the skin on the underside of the wings. This allows the fat to run out.

Poultry will turn out particularly crispy and brown if you baste it towards the end of the roasting time with butter, salted water or orange juice.

Poultry	Weight	Accessories and ovenware	Level	Type of heating	Temperature in °C, grill setting	Cooking time in minutes
Chicken, whole	1.2 kg	Wire rack	2		200-220	60-70
Poulard, whole	1.6 kg	Wire rack	2		190-210	80-90
Chicken, halved	500 g each	Wire rack	2		220-240	40-50
Chicken portions	150 g each	Wire rack	3		210-230	30-40
Chicken portions	300 g each	Wire rack	3		220-240	35-45
Chicken breast	200 g each	Wire rack	2		3	30-40
Duck, whole	2.0 kg	Wire rack	1		240-250	90-100
Duck breast	300 g each	Wire rack	3		240-260	30-40
Goose, whole	3.5-4.0 kg	Wire rack	2		170-190	120-140
Goose legs	400 g each	Wire rack	3		220-240	50-60
Small turkey, whole	3.0 kg	Wire rack	2		180-200	80-100
Rolled turkey joint	1.5 kg	Uncovered	1		190-210	110-130
Turkey breast	1.0 kg	Covered	2		180-200	80-90
Turkey thigh	1.0 kg	Wire rack	2		180-200	90-100

Fish

Turn the pieces of fish after ⅔ of the time.

Whole fish does not have to be turned. Place the whole fish in the oven in its swimming position with its dorsal fin facing upwards. Placing half a potato or a small ovenproof container in the stomach cavity of the fish will make it more stable.

For fish fillet, add a few tablespoons of liquid to provide steam.

Fish	Weight	Accessories and ovenware	Level	Type of heating	Temperature in °C, grill setting	Cooking time in minutes
Fish, whole	300 g each (approx.)	Wire rack	2		2	20-25
	1.0 kg	Wire rack	2		210-230	45-55
	1.5 kg	Wire rack	2		180-200	60-70
	2.0 kg	Covered	2		180-200	70-80
Fish steak, 3 cm thick		Wire rack	3		2	20-25
Fish fillet		Covered	2		210-230	20-30

Tips for roasting and grilling

The table does not contain information for the weight of the joint.	Select the next lowest weight from the instructions and extend the time.
How to tell when the roast is ready.	Use a meat thermometer (available from specialist shops) or carry out a “spoon test”. Press down on the roast with a spoon. If it feels firm, it is ready. If the spoon can be pressed in, it needs to be cooked for a little longer.
The roast is too dark and the crackling is partly burnt.	Check the shelf height and temperature.
The roast looks good but the juices are burnt.	Next time, use a smaller roasting dish or add more liquid.
The roast looks good but the juices are too clear and watery.	Next time, use a larger roasting dish and use less liquid.
Steam rises from the roast when basted.	This is normal and due to the laws of physics. The majority of the steam escapes through the steam outlet. It may settle and form condensation on the cooler switch panel or on the fronts of adjacent units.

Bakes, gratins, toast with toppings

Always place ovenware on the wire rack.

If you are grilling directly on the wire rack without ovenware, you should also insert the universal pan at level 1. This keeps the oven cleaner.

How well cooked the bake is will depend on the size of the dish and the height of the bake. The figures in the table are only average values.

Dish	Accessories and ovenware	Level	Type of heating	Temperature in °C	Cooking time in minutes
Bakes					
Bake, sweet	Ovenproof dish	2		180-200	50-60
Soufflé	Ovenproof dish	2		170-190	35-45
	Ramekins	2		190-210	25-30
Pasta bake	Ovenproof dish	2		200-220	40-50
Lasagne	Ovenproof dish	2		180-200	40-50
Gratin					
Potato gratin, raw ingredients, max. 4 cm deep	1 ovenproof dish	2		160-180	60-80
	2 ovenproof dishes	1+3		150-170	60-80
Toast					
4 slices, with topping	Wire rack	3		160-170	10-15
12 slices, with topping	Wire rack	3		160-170	15-20

Convenience products

Observe the instructions on the packaging.

If you line the accessories with greaseproof paper, make sure that the paper is suitable for these temperatures. Make sure the paper is a suitable size for the dish to be cooked.

The cooking result greatly depends on the quality of the food. Pre-browning and irregularities can sometimes even be found on the raw product.

Dish	Accessories	Level	Type of heating	Temperature in °C	Cooking time in minutes
Pizza, frozen					
Pizza with thin base	Universal pan	2	/	200-220	15-20
	Universal pan + rack	3+1		180-200	20-30
Pizza with deep-pan base	Universal pan	2	/	170-190	20-30
	Universal pan + rack	3+1		170-190	25-35
Pizza baguette	Universal pan	3	/	170-190	20-30
Mini pizza	Universal pan	3	/	190-210	10-20
Pizza, chilled					
Pizza (preheat)	Universal pan	1	/	180-200	10-15

Dish	Accessories	Level	Type of heating	Temperature in °C	Cooking time in minutes
Potato products, frozen					
Chips	Universal pan	3	/	190-210	20-30
	Universal pan + baking tray	3+1		180-200	30-40
Croquettes	Universal pan	3	/	190-210	20-25
Rösti, stuffed potato pockets	Universal pan	3	/	200-220	15-25
Baked items, frozen					
Bread rolls, baguette	Universal pan	3	/	180-200	10-20
Pretzels (dough)	Universal pan	3	/	200-220	10-20
Baked items, prebaked					
Part-cooked rolls, part-cooked baguette	Universal pan	3		190-210	10-20
	Universal pan + rack	3+1		160-180	20-25
Processed portions, frozen					
Fish fingers	Universal pan	2	/	220-240	10-20
Chicken goujons, chicken nuggets	Universal pan	3	/	200-220	15-25
Strudel, frozen					
Strudel	Universal pan	3	/	180-200	35-40

Special dishes

At low temperatures, 3D hot air is equally useful for producing creamy yoghurt as it is for proving light yeast dough.

First, remove accessories, hook-in racks or telescopic shelves from the cooking compartment.

Preparing yoghurt

1. Bring 1 litre of milk (3.5 % fat) to the boil and cool down to 40 °C.
2. Stir in 150 g of yoghurt (at refrigerator temperature).
3. Pour into cups or small screw-top jars and cover with cling film.
4. Preheat the cooking compartment as indicated.
5. Place the cups or jars on the cooking compartment floor and incubate as indicated.

Proving dough

1. Prepare the dough as usual, place it in a heat-resistant ceramic dish and cover.
2. Preheat the cooking compartment as indicated.
3. Switch off the oven and place the dough in the cooking compartment and leave it to prove.

Dish	Ovenware		Type of heating	Temperature	Cooking time
Yoghurt	Cups or screw-top jars	on the cooking compartment floor		50 °C Preheat 50 °C	5 mins 8 hrs
Proving dough	Heat-resistant dish	on the cooking compartment floor		50 °C Preheat Switch off the appliance and place the yeast dough in the cooking compartment	5-10 mins 20-30 mins

Defrost

The defrosting time will depend on the type and quantity of the food.

Observe the instructions on the packaging.

Take frozen food out of its packaging and place in a suitable dish on the wire rack.

Place poultry on a plate with the breast side facing down.

Frozen food	Accessories	Level	Type of heating	Temperature
e.g. cream cakes, buttercream cakes, gateaux with chocolate or sugar icing, fruit, chicken, sausage and meat, bread and bread rolls, cakes and other baked items	Wire rack	1		The temperature selector remains switched off

Drying

With ⊛ 3D hot air, you can dry foods brilliantly.

Use unblemished fruit and vegetables only and wash them thoroughly.

Drain off the excess water, then dry them.

Line the universal pan and the wire rack with greaseproof or parchment paper.

Turn very juicy fruit or vegetables several times.

Remove fruit and vegetables from the paper as soon as they have dried.

Fruit and herbs	Accessories	Level	Type of heating	Temperature	Cooking time
600 g apple rings	Universal pan + rack	3+1	⊛	80 °C	5 hrs (approx.)
800 g pear slices	Universal pan + rack	3+1	⊛	80 °C	8 hrs (approx.)
1.5 kg damsons or plums	Universal pan + rack	3+1	⊛	80 °C	8-10 hrs (approx.)
200 g herbs, washed	Universal pan + rack	3+1	⊛	80 °C	1½ hrs (approx.)

Preserving

For preserving, the jars and rubber seals must be clean and intact. If possible, use jars of the same size. The information in the table is for round, one-litre jars.

Caution!

Do not use jars that are larger or taller than this. The lids could crack.

Only use fruit and vegetables in good condition. Wash them thoroughly.

The times given in the tables are a guide only. The time will depend on the room temperature, number of jars, and the quantity and temperature of the contents. Before you switch off the appliance or change the cooking mode, check whether the contents of the jars are bubbling as they should.

Preparation

1. Fill the jars, but not to the top.
2. Wipe the rims of the jars, as they must be clean.
3. Place a damp rubber seal and a lid on each jar.
4. Seal the jars with the clips.

Place no more than six jars in the cooking compartment.

Making settings

1. Insert the universal pan at level 2. Arrange the jars on it so that they do not touch each other.
2. Pour ½ litre of hot water (approx. 80 °C) into the universal pan.
3. Close the oven door.
4. Set ⊟ Bottom heating.
5. Set the temperature to between 170 and 180 °C.

Preserving

Fruit
After approx. 40 to 50 minutes, small bubbles begin to form at short intervals. Switch off the oven.

After 25 to 35 minutes of residual heat, remove the preserving jars from the cooking compartment. If they are allowed to cool for longer in the cooking compartment, germs could multiply, promoting acidification of the preserved fruit.

Fruit in one-litre jars	When it starts to bubble	Residual heat
Apples, redcurrants, strawberries	Switch off	approx. 25 minutes
Cherries, apricots, peaches, gooseberries	Switch off	approx. 30 minutes
Apple purée, pears, plums	Switch off	approx. 35 minutes

Vegetables
As soon as bubbles begin to form in the jars, set the temperature back to between 120 and 140 °C. Depending on the type of vegetable, heat for approx. 35 to 70 minutes. Switch off the oven after this time and use the residual heat.

Vegetables with cold cooking water in one-litre jars	When it starts to bubble	Residual heat
Gherkins	-	approx. 35 minutes
Beetroot	approx. 35 minutes	approx. 30 minutes
Brussels sprouts	approx. 45 minutes	approx. 30 minutes
Beans, kohlrabi, red cabbage	approx. 60 minutes	approx. 30 minutes
Peas	approx. 70 minutes	approx. 30 minutes

Taking out the jars

After preserving, remove the jars from the cooking compartment.

Caution!

Do not place the hot jars on a cold or wet surface. They could suddenly burst.

Acrylamide in foodstuffs

Acrylamide is mainly produced in grain and potato products prepared at high temperatures, such as potato crisps, chips, toast, bread rolls, bread or fine baked goods (biscuits, gingerbread, cookies).

Tips for keeping acrylamide to a minimum when preparing food	
General	■ Keep cooking times to a minimum. ■ Cook meals until they are golden brown, but not too dark. ■ Large, thick pieces of food contain less acrylamide.
Baking	With top/bottom heating max. 200 °C. With 3D hot air or hot air max.180 °C.
Biscuits	With top/bottom heating max. 190 °C. With 3D hot air or hot air max. 170 °C. Egg or egg yolk reduces the production of acrylamide.
Oven chips	Spread evenly over the baking tray, in a single layer. Bake at least 400 g per baking tray so that the chips do not dry out

Test dishes

These tables have been produced for test institutes to facilitate the inspection and testing of the various appliances.

In accordance with EN 50304/EN 60350 (2009) and IEC 60350.

Baking

Baking on 2 levels:
Always insert the universal pan above the baking tray.
Baking on 3 levels:
Insert the universal pan in the middle.

Piped biscuits:
Baking trays that are placed in the oven at the same time will not necessarily be ready at the same time.

Double crust apple pie on 1 level:
place dark springform cake tins next to each other diagonally on the same level.
Double crust apple pie on 2 levels:
Place dark springform cake tins next to each other (see illustration).

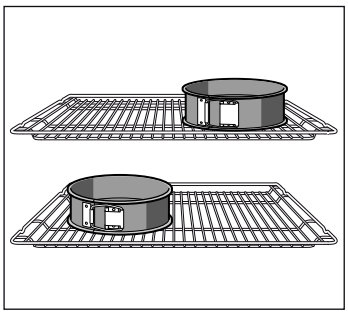

Cakes in tinplate springform cake tins:
Bake on 1 level with ⊟ Top/bottom heating. Place the springform cake tin on the universal pan instead of on the wire rack.

Note: For baking, use the lower of the temperatures indicated first.

Dish	Accessories and tins	Level	Type of heating	Temperature in °C	Cooking time in minutes
Viennese whirls (preheat*)	Baking tray	3	⊟	140-150	30-40
	Baking tray	3	⊛	140-150	30-40
	Universal pan + baking tray	3+1	⊛	140-150	30-45
	2 baking trays + universal pan	5+3+1	⊛	130-140	40-55
Small cakes (preheat*)	Baking tray	3	⊟	150-170	20-35
	Baking tray	3	⊛	150-170	25-35
	Universal pan + baking tray	3+1	⊛	140-160	30-45
	2 baking trays + universal pan	5+3+1	⊛	130-150	35-55
Hot water sponge cake (pre-heat*)	Springform cake tin on the wire rack	2	⊟	160-170	30-40
Hot water sponge cake	Springform cake tin on the wire rack	2	⊛	160-170	30-45
Apple pie	Wire rack + 2 springform cake tins, dia. 20 cm	1	⊟	170-190	80-100
	2 wire racks + 2 springform cake tins, dia. 20 cm	3+1	⊛	170-190	70-100

* Do not use rapid heating to preheat the appliance.

Grilling

If you are grilling food directly on the wire rack, the universal pan should also be inserted at level 1. The liquid is then collected, keeping the oven cleaner.

Dish	Accessories	Level	Type of heating	Grill setting	Cooking time in minutes
Toast Preheat for 10 minutes	Wire rack	5	⊟	3	½-2
Beefburgers, 12 pieces* do not preheat	Wire rack + universal pan	4+1	⊟	3	25-30

* turn over after ⅔ of the cooking time.

Robert Bosch Hausgeräte GmbH
Carl-Wery-Straße 34
81739 München
Germany
www.bosch-home.com

9000772453

45
930830