en Installation instructions

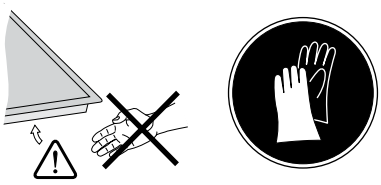

1

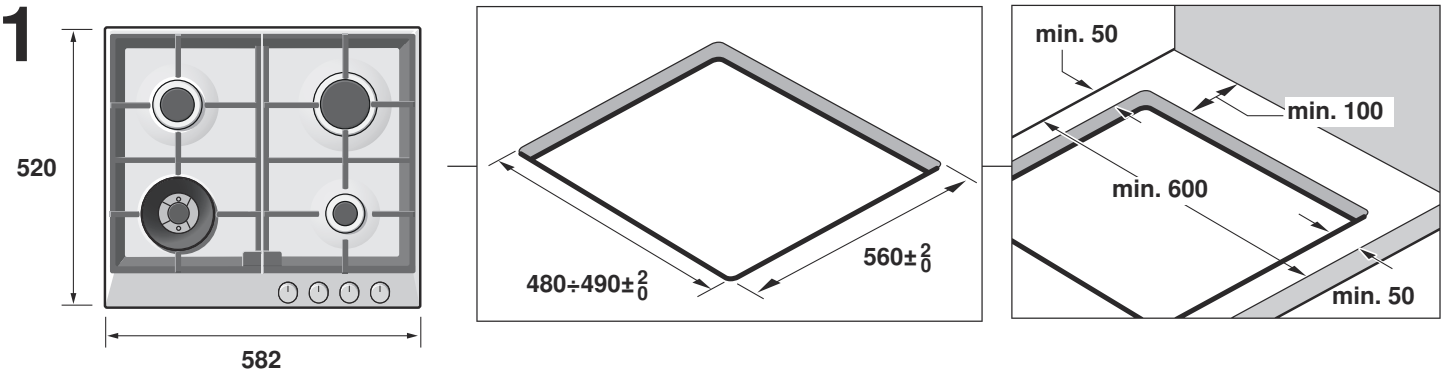

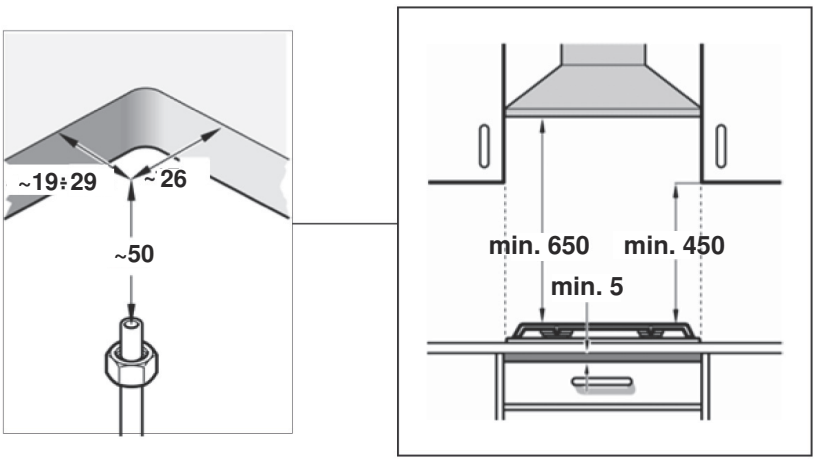

2

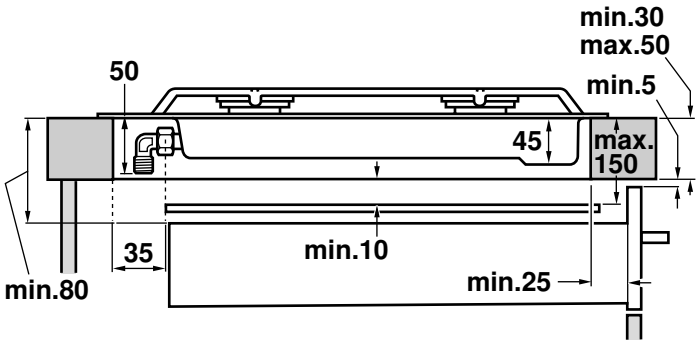

3

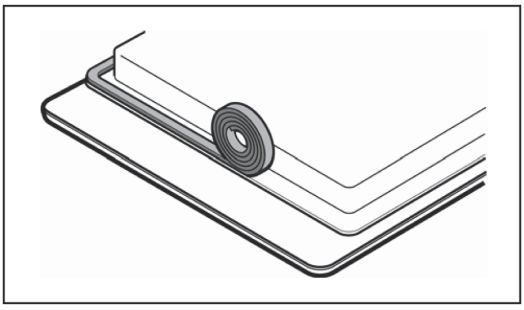

4

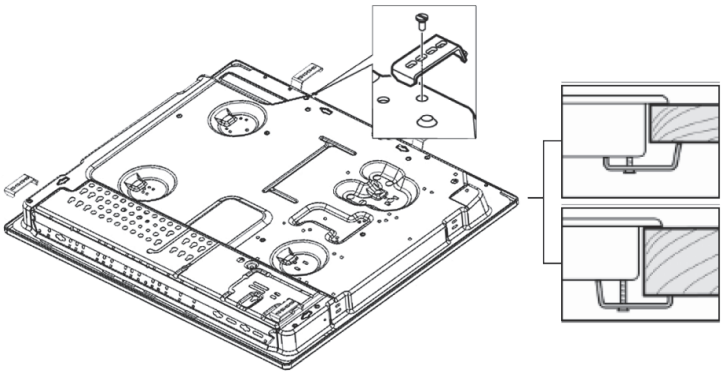

5

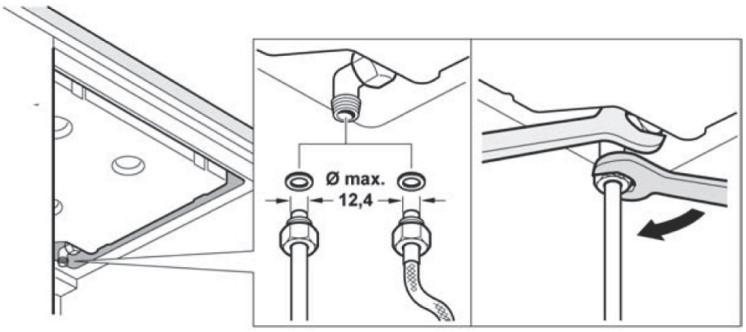

5a

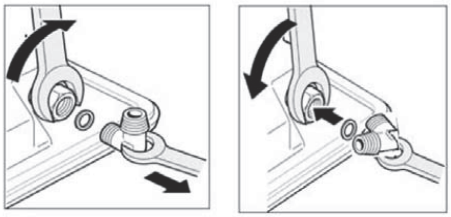

6



7

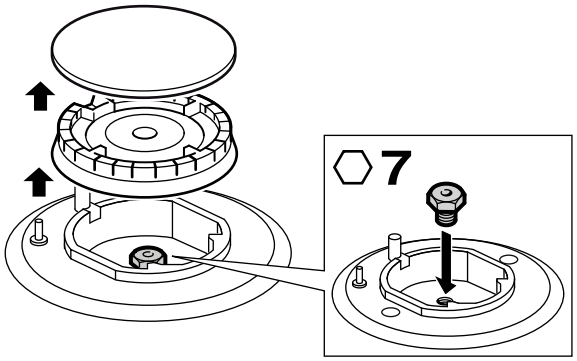

7a

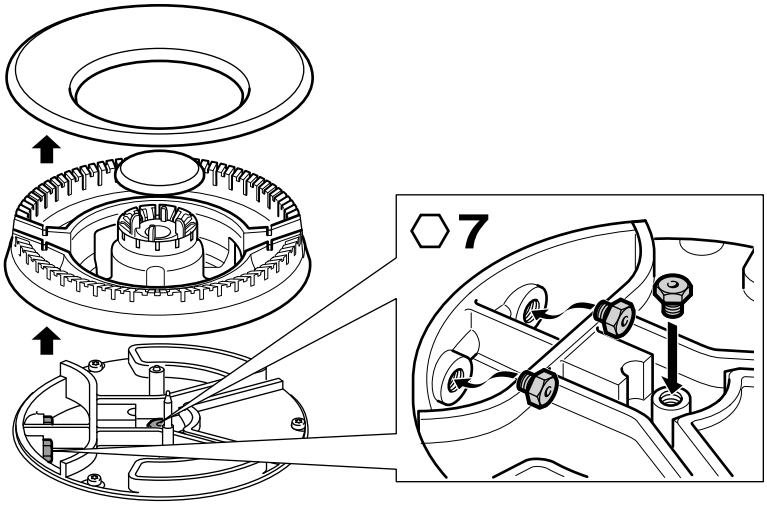

8

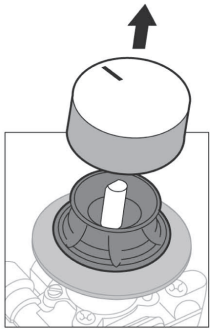

8a

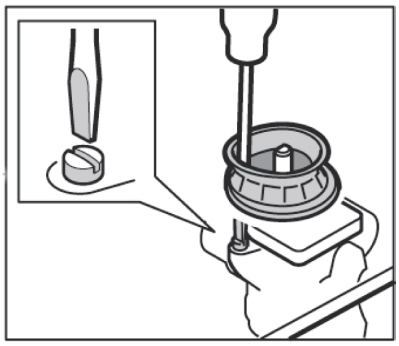

9

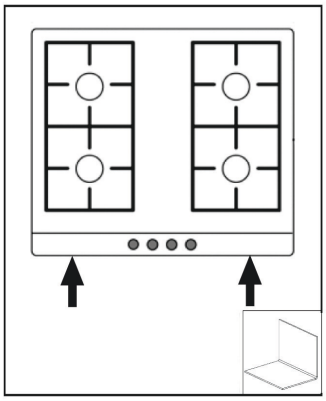

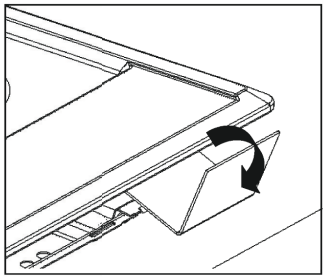

10

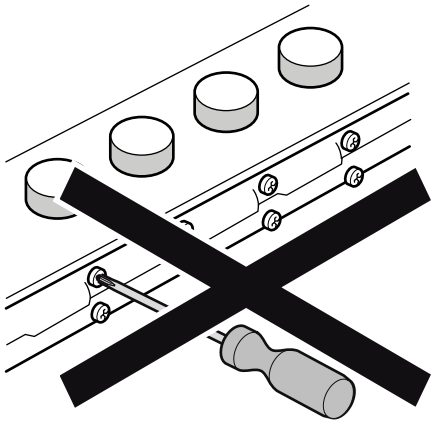

Safety precautions

Read the appliance's instructions before installing and using.

The images shown in these instructions are for guidance only.

The manufacturer is exempt from all responsibility if the requirements of this manual are not complied with.

This appliance must only be used in well ventilated places. It must not be connected to a combustion product removal device.

All operations relating to installation, connection, regulation and conversion to other gas types must be carried out by an authorised installation engineer, respecting all applicable regulations, standards and the specifications of the local gas and electricity suppliers. Special attention shall be paid to ventilation regulations.

It is recommended you contact the Technical Assistance Service to change to another gas type.

This appliance has been designed for home use only, not for commercial or professional use. This appliance cannot be installed on yachts or in caravans. The warranty will only be valid if the appliance is used for the purpose for which it was designed.

Before installing, you need to check that local distribution conditions are compatible with the appliance's adjustment indicated on the specifications plate (gas type and pressure, power, voltage).

Before you begin, turn off the appliance's electricity and gas supply.

The supply cable must be attached to the unit to prevent it from touching hot parts of the oven or hob.

Appliances with electrical supply must be earthed.

Do not tamper with the appliance's interior. If necessary, call our Technical Assistance Service.

Before installing

This appliance is class 3 type, according to the EN 30-1-1 regulation for gas appliances: built-in appliance.

The kitchen unit in which the appliance is installed must be properly secured and stable.

The kitchen units next to the appliance, the laminated covering and glue for adhering it must be made of non-flammable and heat-resistant materials.

This appliance cannot be installed above fridges, washing machines, dishwashers or similar.

An oven must have forced ventilation to install a hob above it. Check the dimensions of the oven in the installation manual.

If an extractor fan is installed, you must follow the instructions in the installation manual, always respecting the minimum vertical distance from the hob (fig. 1).

Preparation of the kitchen unit (fig. 1-2)

Make an appropriate size cut in the work surface.

If the hob is electric or mixed (gas and electricity) and there is no oven below, place a non-flammable separator (e.g. metal or plywood) 10 mm from the bottom of the hob. This will prevent access to the base of the hob.If the hob is gas, it is recommendable to place the separator at the same distance.

On wood work surfaces, varnish the cutting surfaces with a special glue. This protects them from moisture which could collect under the work surface.

Installation of appliance

Note: Wear protective gloves to fit the hob.

Depending on the model, the adhesive seal may be factory-fitted. If this is the case, it should not be removed under any circumstances, since the adhesive seal prevents leaks. If the seal has not been factory-fitted, apply it to the underside of the hob. Fig. 3.

Fitting the appliance onto the kitchen unit:

1. Screw each one of the clips into the position indicated so that they are free to rotate.
2. Insert and centre the hob.
   Press the sides of the hob until it is supported around its entire perimeter.
3. Turn the clips and tighten them fully.
   The position of the clips depends on how thick the work surface is. Fig. 4.

Removal of hob

Turn off the appliance's electricity and gas supply.

Unscrew the clips and proceed in the reverse order to installation.

Gas connection (fig. 5)

The end of the inlet connection point of the gas hob has a 1/2" (20.955 mm) thread that allows for:

- fixed connection.
- connection using a flexible metal pipe (L min. 1 m - max. 3 m).

The watertight seal (034308) supplied must be inserted between the manifold outlet and the gas supply.

You must prevent the pipe from coming into contact with moving parts of the kitchen unit (for example, a drawer) and prevent access to any spaces which might become obstructed.

If you need to connect the gas supply horizontally, our technical assistance service can supply you with an L-tube (code 173018), and a seal (code 034308).

If you need to make a cylindrical connection, replace the factory-fitted L-tube with the one in the accessory bag. Fig. 5a.

Please remember to insert the seal.

⚠ Danger of leaks!

If any connection is handled, check the seal.

The manufacturer is not liable for any connection leaking, after being handled.

Electric connection (fig. 6)

Check that the voltage and power of the appliance are compatible with the electrical installation.

The hobs are supplied with a power cable with or without a wall socket plug.

Appliances with plugs must only be connected to sockets that have earth wires correctly installed.

Provide an omnipolar cut-off switch with a minimum contact opening of 3 mm (except for plug connections, if the user has access to it).

This appliance is type "Y": the supply cable can only be changed by the Technical Assistance Service and not the user. The cable type and minimum cross-section must be respected.

Changing the gas type

If the country's regulations allow, this appliance can be adapted to other types of gas (see specifications plate). The components required for this are in the transformation kit supplied (depending on the model) or are available from our Technical Assistance Service.

Important: After finishing, stick the sticker, indicating the new gas type, close to the specifications plate.

The following steps should be taken:

A) Changing the nozzles (fig. 7):

1. Remove the pan supports, burner caps and diffusers.
2. Change the nozzles using the spanner code 340847 (code 340808 for double-flame burners or triple-flame burners) provided by our Technical Assistance Service, see table I, taking special care to ensure that the nozzle does not fall when it is removed from or fitted to the burner.
   Ensure that it is completely tightened in order to guarantee the seal.
   Primary air adjustment is not necessary with these burners.
3. Position the diffusers and burner caps on the corresponding rings and the pan supports on their fasteners.

B) Adjusting the taps (Fig. 8):

1. Set the control knobs to minimum.
2. Remove the control knobs from the taps. It has a flexible rubber valve reinforcing ring. Press with the tip of the screwdriver to access the tap's adjusting screw.
   Never remove the valve reinforcing ring. The valve reinforcing rings guarantee the watertightness of the appliance's interior from liquids and dirt, which might otherwise prevent its correct operation.
3. Adjust the minimum ring setting by turning the by-pass screw using a flat head screwdriver.
   Depending on the gas to which your appliance is going to be adapted, see table II, carry out the corresponding action:
   A: firmly tighten the by-pass screws.
   B: loosen the by-pass screws until the gas flow from the burners is correct.
   C: the by-pass screws need to be changed by an authorised engineer.

D: do not touch the by-pass screws.

When adjusting the control knob between maximum and minimum, the burner does not go out, nor is there a flame backdraught created.

If the by-pass screw cannot be accessed, disassemble the grease drip tray, which is fitted to the hob via a series of clips and screws. Remove it as follows:

1. Remove all pan supports, burner caps, diffusers and control knobs.
2. Remove the screws from the burners.
3. If necessary, use the disassembly lever 483196 availablle from our Technical Assistance Service. To release the front clips, apply the lever to the area shown in figure 9.
4. To reinstall the appliance, proceed in the reverse order to disassembly.

Never remove the tap spindle (Fig. 10). In the event of a malfunction, change the whole tap.

I

	GAS	mbar	⊙	Qn (Kw)	m3/h	g/h		Qr (kW)
	G20	20	72	1,00	0,095	-	27	≤ 0,33
	G30	29	50	1,00	-	73	27	≤ 0,33
	G31	37	50	1	-	71	27	≤ 0,33
	G20	20	100	1,75	0,167	-	30	≤ 0,35
	G30	29	67	1,75	-	127	30	≤ 0,41
	G31	37	67	1,75	-	125	30	≤ 0,41
	G20	20	115	3,00	0,286	-	39	≤ 0,50
	G30	29	85	3,00	-	218	39	≤ 0,60
	G31	37	85	3	-	214	39	≤ 0,60
	G20	20	115	5,00	0,476	-	-	-
	G20	20	70	-	-	-	27	≤ 0,30
	G30	29	71	4,60	-	334	-	-
	G30	29	46	-	-	-	27	≤ 0,30
	G31	37	71	4,6	-	328	-	-
	G31	37	46	-	-	-	27	≤ 0,30

II

	G20/20	**G30/29**	**G31/37**
G20/20		A	A
G30/29	B		D
G31/37	B	D	