Built-in oven HBG78R9.0B

BOSCH

[en] Instruction manual

en

Table of contents

Safety precautions **4**
Before installation 4
Safety notes 4
Causes of damage 4
Your new oven **5**
Control panel 5
Buttons 5
Rotary selector 5
Display 5
Temperature indicator 5
Cooking compartment 5
Accessories 6
Before using the appliance for the first time **8**
Initial setup 8
Heating up the cooking compartment 8
Cleaning the accessories 8
Switching the oven on and off **8**
Switching on 8
Switching off 8
Setting the oven **9**
Types of heating 9
Setting the type of heating and temperature 9
Recommended settings 10
Setting rapid heating 10
Time-setting options **11**
Setting the time-setting options - in brief 11
Setting the cooking time 11
Setting a later end time 11
Setting the timer 12
Setting the clock 12
Memory **12**
Saving settings in the memory 12
Starting the memory 12
Sabbath mode **12**
Starting Sabbath mode 12
Childproof lock **13**
Basic settings **13**
Changing the basic settings 14
Automatic switch-off **15**
Self-cleaning **15**
Important notes 15
Before self-cleaning 15
Setting the cleaning level 16
After self-cleaning 16
Care and cleaning **16**
Cleaning agents 16
Detaching and refitting the rails 17
Detaching and attaching the oven door 17
Removing the door cover 18
Removing and installing the door panels 18
Troubleshooting **18**
Malfunction table 18
Replacing the bulb in the oven ceiling light 19
Replacing the bulb in the left-hand oven light 19
Glass cover 20
After-sales service **20**
E number and FD number 20
Energy and the environment **20**
Hot air eco heating type 20
Saving energy 21
Environmentally-friendly disposal 21
Automatic programmes **21**
Ovenware 21
Preparing the dish 22
Programmes 22
Selecting and setting a programme 25
Adjust individually 26
Tips for the automatic programmes 26
Tested for you in our cooking studio **26**
Cakes and pastries 26
Baking tips 29
Meat, poultry, fish 29
Tips for roasting and grilling 32
Slow cooking 32
Tips for slow cooking 33
Preprepared products 33
Special dishes 34
Defrost 34
Drying 35
Preserving 35
Acrylamide in foodstuffs **36**
Test dishes **36**
Baking 36
Grilling 37

Additional information on products, accessories, replacement parts and services can be found at **www.bosch-home.com** and in the online shop **www.bosch-eshop.com**

⚠ Safety precautions

Please read this instruction manual carefully. Please keep the instruction and installation manuals in a safe place. Please pass on these manuals to the new owner if you sell the appliance.

Before installation

Damage during transport

Check the appliance for damage after unpacking it. Do not connect the appliance if it has been damaged in transit.

Electrical connection

Only a licensed expert may connect the appliance. You will lose your warranty entitlement in the event of any damage caused by incorrect connection.

Safety notes

This appliance is intended for domestic use only. This appliance must only be used for food preparation.

Adults and children must not operate the appliance without supervision,

- if they are physically or mentally incapable of doing so or
- if they have insufficient knowledge or experience.

Never let children play with the appliance.

Hot cooking compartment

Risk of burns!

- Never touch the interior surfaces of the cooking compartment or the heating elements. Open the appliance door carefully. Hot steam may escape. Small children must be kept at a safe distance from the appliance.
- Never prepare food containing large quantities of drinks with a high alcohol content. Alcoholic vapours can catch fire in the cooking compartment. Only use small quantities of drinks with a high alcohol content and open the appliance door carefully.

Risk of fire!

- Never store combustible items in the cooking compartment. Never open the appliance door if there is smoke inside. Switch off the appliance. Pull out the mains plug or switch off the circuit breaker in the fuse box.
- Do not place greaseproof paper loosely over accessories during preheating. A draught is created when the appliance door is opened. The greaseproof paper may come into contact with the heating element and catch fire. Always weight down the greaseproof paper with a dish or a baking tin. Only cover the surface required with greaseproof paper. The greaseproof paper must not protrude over the accessories.

Risk of short circuit!

Never trap connecting cables of electrical appliances in the hot appliance door. The cable insulation could melt.

Risk of scalding!

Never pour water into the hot cooking compartment. This will produce hot steam.

Hot accessories and ovenware

Risk of burns!

Never remove ovenware or accessories from the cooking compartment without an oven cloth or oven gloves.

Improper repairs

Risk of electric shock!

Improper repairs are dangerous. Repairs may only be carried out by one of our trained after-sales engineers. If the appliance is defective, pull out the mains plug or switch off the appliance at the circuit breaker in the fuse box. Call the after-sales service.

Self-cleaning

Risk of fire!

- Loose food residues, grease and meat juices can catch fire during the Self-cleaning cycle. Remove coarse dirt from the cooking compartment before every Self-cleaning cycle.
- Never hang flammable items, such as tea towels, on the door handle. The appliance will become very hot on the outside during the Self-cleaning cycle. Keep children at a safe distance.

Risk of serious damage to health.!

Never let non-stick baking trays and tins go through the Self-cleaning cycle. High temperatures damage the non-stick coating and poisonous gases are released.

Causes of damage

Caution!

- Accessories, foil, greaseproof paper or ovenware on the cooking compartment floor: do not place accessories on the cooking compartment floor. Do not cover the cooking compartment floor with any sort of foil or greaseproof paper. Do not place ovenware on the cooking compartment floor if a temperature of over 50 °C has been set. This will cause heat to accumulate. The baking and roasting times will no longer be correct and the enamel will be damaged.
- Water in a hot cooking compartment: do not pour water into the cooking compartment when it is hot. This will cause steam. The temperature change can cause damage to the enamel.
- Moist food: do not store moist food in the cooking compartment when it is closed for prolonged periods This will damage the enamel.
- Fruit juice: when baking particularly juicy fruit pies, do not pack the baking tray too generously. Fruit juice dripping from the baking tray leaves stains that cannot be removed. If possible, use the deeper universal pan.
- Cooling with the appliance door open: only allow the cooking compartment to cool when it is closed. Even if the appliance door is only open a little, front panels of adjacent units could be damaged over time.
- Heavily soiled oven seal: if the oven seal is heavily soiled, the oven door will no longer close properly when the oven is in operation. The fronts of adjacent units could be damaged. Always keep the oven seal clean.
- Oven door as a bearing surface: do not stand or place objects on the oven door when it is open. Do not place ovenware or accessories on the oven door.
- Carrying the appliance: do not carry or hold the appliance by the door handle. The door handle cannot support the weight of the appliance and could break.

Your new oven

Here you will learn about your new oven. The control panel and the individual operating controls are explained. You will find information on the cooking compartment and the accessories.

Control panel

Here, you will see an overview of the control panel. Depending on the appliance model, individual details may differ.

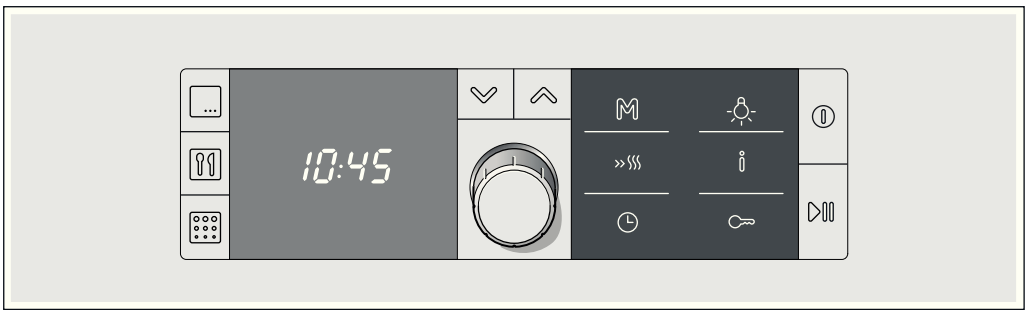

Buttons

The sensors are located under the individual buttons. They must not be pressed too firmly. Just touch the corresponding symbol.

Symbol	Button function
	Selects the type of heating
	Selects automatic programmes
	Selects automatic self-cleaning
	Moves one row down
	Moves one row up
	Press and hold = selects the memory Press briefly = starts the memory
	Setting rapid heating
	Opens and closes the time-setting options
	Switches the oven light on and off
	Press briefly = calls up information Press and hold = opens and closes the Basic settings menu
	Activates/deactivates the childproof lock
	Switches the oven on and off
	Press briefly = starts/pauses operation Press and hold = cancels operation

Rotary selector

The rotary selector is used to alter the default values and setting values.

The rotary selector is retractable. Press on the rotary selector to pop it in or out.

Display

The display is split into different sections:

- Heading, only appears prior to starting
- Settings area
- Status bar

Heading
The function selected is shown in the top line, e.g. types of heating, programmes, time-setting options, etc..To the right of this, arrows indicate the direction in which you can navigate using the and buttons. The heading disappears after starting.

Settings area
Suggested values appear in the settings range, which you can change. You can change from one line to the next using the and navigation buttons. Brackets are displayed around the line you are currently in. You can use the rotary selector to change the value in the brackets.

Status bar
The status line is at the bottom of the display. It displays the current time, time-setting options which are running down or the childproof lock setting. Depending on the setting, you will receive short information texts before starting.

Temperature indicator

The temperature indicator bars show the heating phases or residual heat in the cooking compartment.

Heating indicator

The heating indicator displays the rising temperature in the cooking compartment. If all bars are filled, the optimum time for placing the dish in the oven has been reached.

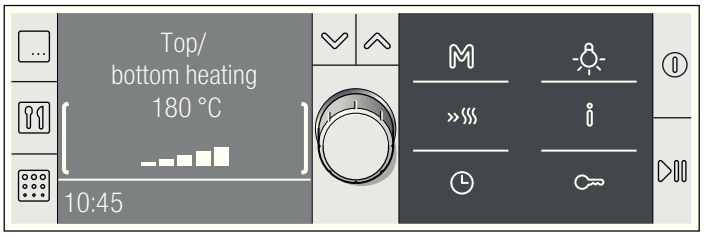

The bars do not appear when settings are made for grilling and cleaning.

You can use the button to check the current heating temperature while the oven is heating up. Due to thermal inertia, the temperature displayed may differ slightly from the actual temperature in the cooking compartment.

Residual heat

The temperature indicator shows the residual heat in the cooking compartment when the appliance is switched off. If all the bars are filled, the temperature in the cooking compartment is approximately 300 °C. Once the temperature has dropped to approximately 60 °C, the display goes out.

Cooking compartment

The oven light is located in the cooking compartment. A cooling fan protects the oven from overheating.

Oven light

During operation, the oven light in the cooking compartment is on. When temperatures up to 60 °C are selected, and when self-cleaning is activated, the light switches off. This enables precise temperature regulation.

The oven light switches on when you open the oven door.

You can use the ☼ button to switch the light on and off.

Cooling fan

The cooling fan switches on and off as required. The hot air escapes above the door. Caution: do not cover the ventilation slots. Otherwise the oven will overheat.

So that the cooking compartment cools down more quickly after operation, the cooling fan continues to run for a certain period afterwards.

Accessories

The accessories can be inserted into the oven at 5 different levels.

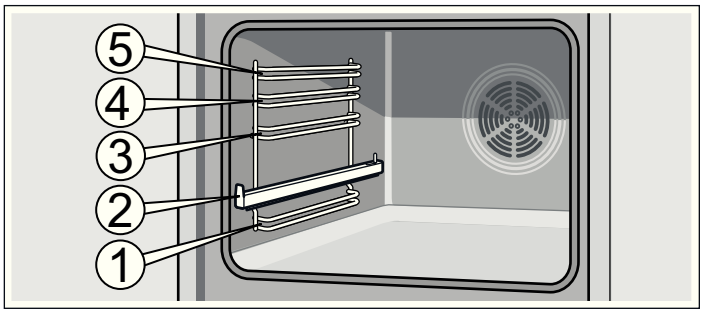

You can pull out the accessories approximately halfway without them tipping. This allows dishes to be removed easily. With the pull-out rails at levels 1 you can pull the accessories out further.

Depending on the appliance equipment, the pull-out rails latch into place when they are pulled out the whole way. This makes it easier for you to place the accessories on top. To unlock, push the pull-out rails back into the cooking compartment with a certain amount of force.

The accessories may be deformed when they become hot. Once they have cooled down again, they regain their original shape. This does not affect their operation.

You can buy accessories from the after-sales service, from specialist retailers or online. Please specify the HEZ number.

Wire rack
For ovenware, cake tins, joints, grilled items and frozen meals.

Insert the wire rack with the curvature pointing downward ⌣.

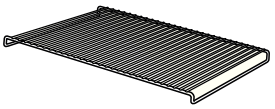

Insert grid
For roasting.

Always place the insert grid in the universal pan. This ensures that dripping fat and meat juices are collected.

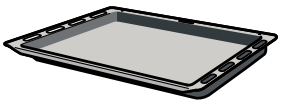

Universal pan
For moist cakes, pastries, frozen meals and large joints. It can also be used to catch dripping fat when you are grilling directly on the wire rack.

Slide the universal pan into the oven with the sloping edge facing the oven door.

Accessory holder
Insert on the left and right. During self-cleaning, the universal pan, for example, can be left in for cleaning.

Special accessories

You can purchase special accessories from the after-sales service or specialist retailers. You will find a comprehensive range of products for your oven in our brochures and on the Internet. The availability of special accessories and whether it is possible to order them online may vary depending on your country. Please see the sales brochures for more details.

Not all special accessories are suitable for every appliance. When purchasing, please always quote the exact designation (E-no.) of your appliance.

Special accessories	Cooking compart-ment with	HEZ number	Use	Suitable for self-cleaning
Wire rack	Shelves	HEZ334000	For ovenware, cake tins, joints, grilled items and frozen meals.	No
	Ridged side walls	HEZ334001	For ovenware, cake tins, joints, grilled items and frozen meals.	No
Enamel baking tray	-	HEZ331070	For cakes and biscuits. Slide the baking tray into the oven with the sloping edge facing towards the oven door.	Yes
Universal pan	-	HEZ332070	For moist cakes, pastries, frozen meals and large joints. It can also be used to catch dripping fat when you are grilling directly on the wire rack. Slide the universal pan into the oven with the sloping edge facing the oven door.	Yes
Wire insert	-	HEZ324000	For roasting. Always place the wire rack in the universal pan. This ensures that dripping fat and meat juices are collected.	No
Grill tray	-	HEZ325070	Use for grilling instead of the wire rack or as a splatter guard, so that the oven does not become very dirty. Only use the grill tray in the universal pan. Grilling on the grill tray: only use at shelf height 1, 2 and 3. Using the grill tray as a splatter guard: insert the universal pan with the grill tray under the wire rack.	Yes
Glass pan	-	HEZ336000	A deep baking tray made of glass. Can also be used as a serving dish.	No
Pizza tray	-	HEZ317000	Ideal for pizza, frozen products or large round cakes. You can use the pizza tray instead of the universal pan. Place the baking tray on the wire rack and proceed according to the details in the tables.	No

Special accessories	Cooking compart-ment with	HEZ number	Use	Suitable for self-cleaning
Bakestone	-	HEZ327000	The bakestone is perfect for preparing home-made bread, bread rolls and pizzas which require a crispy base. The bakestone must always be preheated to the recommended temperature.	Yes
Profi extra-deep pan with wire insert	-	HEZ333070	Ideally suited for preparing large amounts.	Yes
Lid for the Profi extra-deep pan	-	HEZ333001	The lid converts the Profi extra-deep pan into the Profi roasting dish.	No
Profi oven drawer	Ridged side walls	HEZ333100	Suitable for preparing large quantities of food. A deep pan with wire insert, a wire rack for placing on top and a telescopic oven drawer constitute the complete range of accessories. Using the wire rack on top of the drawer gives you outstanding grilling results.	No
Profi Plus oven drawer	Ridged side walls	HEZ333102	Suitable for preparing large quantities of food. A deep pan with wire insert, a wire rack for placing on top and a telescopic oven drawer constitute the complete range of accessories. Using the wire rack on top of the drawer gives you outstanding grilling results.	No
Cover for Profi oven drawers	Ridged side walls	HEZ333101	The lid converts the Profi extra-deep pan into the Profi roasting dish.	No
Glass roasting dish	-	HEZ915001	The glass roasting dish is suitable for stews and bakes that are cooked in the oven. It is ideally suited to automatic programmes or automatic roasting.	No
Telescopic shelves				
2-level	Shelves	HEZ338250	The pull-out rails at levels 2 and 3 allow you to pull accessories out further without them tipping.	No
3-level	Shelves	HEZ338352	The pull-out rails at levels 1, 2 and 3 allow you to pull accessories out further without them tipping. The 3-level pull-out is not suitable for appliances that have a rotary spit.	No
3-level complete pull-out	Shelves	HEZ338356	The pull-out rails at levels 1, 2 and 3 allow you to pull accessories out fully without them tipping. The 3-level complete pull-out is not suitable for appliances that have a rotary spit.	No
3-level complete pull-out with stop function	Shelves	HEZ338357	The pull-out rails at levels 1, 2 and 3 allow you to pull accessories out fully without them tipping. The pull-out rails lock in position allowing accessories to be easily placed on top. The 3-level complete pull-out with stop function is not suitable for appliances that have a rotary spit.	No
Steam filter	-	HEZ329000	You can retrofit this in your oven. The steam filter filters out grease particles from the exhaust air, thereby reducing odours. Only for appliances with a 6, 7 or 8 as the second digit in the E-no. (e.g. HBA78B750).	Yes
System steamer	-	HEZ24D300	For easy preparation of vegetables and fish.	No

After-sales service products

You can obtain suitable care and cleaning agents and other accessories for your domestic appliances from the after-sales service, specialist retailers or (in some countries) online via the e-Shop. Please specify the relevant product number.

Cleaning cloths for stainless-steel surfaces	Product no. 311134	Reduces the build-up of dirt. Impregnated with a special oil for perfect maintenance of your appliance's stainless-steel surfaces.
Oven and grill cleaning gel	Product no. 463582	For cleaning the cooking compartment. The gel is odourless.
Microfibre cloth with honeycomb structure	Product no. 460770	Especially suitable for cleaning delicate surfaces, such as glass, glass ceramic, stainless steel or aluminium. The microfibre cloth removes liquid and grease deposits in one go.
Door lock	Product no. 612594	To prevent children from opening the oven door. The locks on different types of appliance door are screwed in differently. See the information sheet supplied with the door lock.

Before using the appliance for the first time

This section tells you everything you need to do before using the appliance for the first time.

- Set the clock
- Change the language for the text display if required
- Heat up the cooking compartment
- Clean the accessories
- Read the safety information at the start of the instructions for use. This is very important.

Initial setup

Once your new appliance has been connected to the power supply, the "Basic settings" heading appears in the top line of the display. Set the time, and also the text display language, if required. German is the default language.

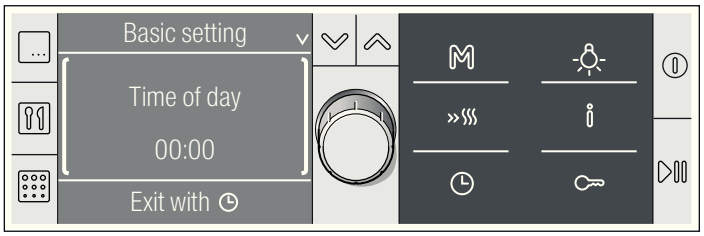

Setting the clock and changing the language

1. Turn the rotary selector to set the current time.
2. Press the button.
   "Select language: English" appears.
3. Select the desired language using the rotary selector.
   30 different languages are available.
4. Press the button.

The language and time are applied. The current time is shown in the display.

Note: You can change the language at any time. See the *Basic settings* section.

Heating up the cooking compartment

To get rid of the new appliance smell, heat up the cooking compartment when it is empty and the oven door closed.

Make sure that the cooking compartment contains no leftover packaging, e.g. polystyrene pellets.

Keep the kitchen ventilated the whole time the oven is on.

Heat up the cooking compartment to 240 °C using Top/bottom heating.

1. Press the button.
   The initial display including descriptions of the buttons appears.
2. Immediately press the button.
   The heading "Types of heating" appears in the top line. 3D hot air and a temperature of 160 °C are suggested in the settings area. Brackets appear around the type of heating.
3. Turn the rotary selector to change the type of heating to Top/bottom heating.
4. Press the button to switch to the temperature.
   The brackets now appear around the temperature.
5. Use the rotary selector to set 240 °C.
6. Press the button.
   Operation starts. The "Types of heating" heading disappears.
7. Switch the oven off after 60 minutes using the button.

The temperature indicator bars show the residual heat in the cooking compartment.

Cleaning the accessories

Before you use the accessories for the first time, clean them thoroughly with hot soapy water and a soft dish cloth.

Switching the oven on and off

You can switch the oven on and off with the button.

Switching on

Press the button.

The initial display including descriptions of the buttons appears.

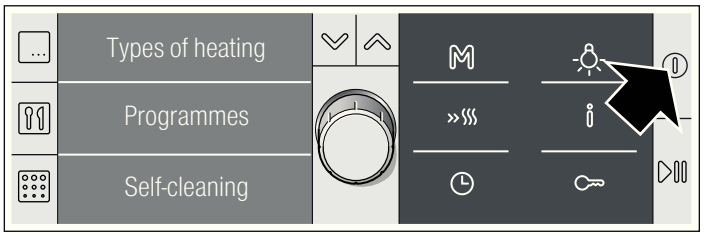

Select the desired operating mode:

- button = types of heating
- button = programmes
- button = self-cleaning
- button = saved memory setting

If no button is pressed in the next few seconds, a suggested setting is displayed. This is always the 3D hot air type of heating and 160 °C.

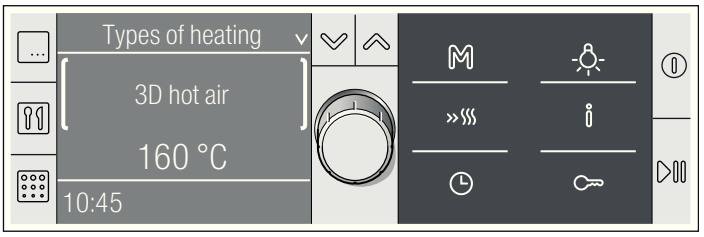

You can select a different operating mode at any time.

A detailed description of how to make settings is provided in the individual sections.

Switching off

Press the button. The oven is switched off and the time appears in the display.

Setting the oven

In this section, you will find information about

- which types of heating are available in your oven
- how you set a type of heating and a temperature
- how you select a dish from the recommended settings
- and how you set rapid heating

Types of heating

A large number of types of heating are available in your oven. This allows you to select the ideal way of preparing every dish.

Type of heating and temperature range	Application
3D hot air 30-275 °C	For cakes and pastries on one to three levels. The fan distributes the heat from the ring heating element in the back wall evenly around the cooking compartment.
Hot air eco* 30-275 °C	For cakes and pastries, bakes, frozen and convenience products, meat and fish, on one level without preheating. The fan distributes the energy-optimised heat from the ring heating element evenly in the cooking compartment.
Top/bottom heating 30-300 °C	For cakes, bakes and lean joints of meat (e.g. beef or game) on one level. Heat is emitted evenly from the top and bottom.
HydroBaking 30-300 °C	For yeast-risen pastry, e.g. bread/ bread rolls or plaited loaves, and for choux pastry, e.g. cream puffs, or sponge. Heat is emitted evenly from the top and bottom. The moisture from the food remains in the cooking compartment as steam.
Pizza setting 30-275 °C	For the quick preparation of frozen products without preheating, e.g. pizza, chips or strudel.Heat is emitted from below and by the ring heating element in the back wall.
Intensive heat 30-300 °C	For dishes with a crispy base. The heat is emitted from above and more intensively from below.
Bottom heating 30-300 °C	For preserving and final baking or rebrowning. The heat is emitted from below.
Hot air grilling 30-300 °C	For roasting meat, poultry and whole fish. The grill element and the fan switch on and off alternately. The fan causes the hot air to circulate around the dish.
Grill, large area Grill settings: 1 (low), 2 (medium), 3 (high)	For grilling steaks, sausages, toast and pieces of fish. The whole area below the grill element becomes hot.
Grill, small area Grill settings: 1 (low), 2 (medium), 3 (high)	For grilling small quantities of steaks, sausages, toast and pieces of fish. The centre part of the grill element becomes hot.
Slow cook 70-90 °C	For gentle cooking of succulent pieces of meat. The heat is emitted evenly from the top and bottom at low temperatures.

* Type of heating used to determine the energy efficiency class in accordance with EN50304.

Type of heating and temperature range	Application
Defrost 30-60 °C	For defrosting, e.g.meat, poultry, bread and cakes. The fan causes the warm air to circulate around the dish.
Plate warming 30-70 °C	For warming ovenware, e.g. made from porcelain or glass.
Keep warm 60-100 °C	For keeping cooked dishes warm.
Recommended settings	Recommended settings for a variety of dishes.

* Type of heating used to determine the energy efficiency class in accordance with EN50304.

Setting the type of heating and temperature

Press the button. 3D hot air and 160 °C are suggested in the display.

You can apply this setting immediately with the button.

If you wish to choose another type of heating and temperature, proceed as follows:

Example in the picture: Setting for Top/bottom heating at 185 °C.

1. Turn the rotary selector to set the desired type of heating.

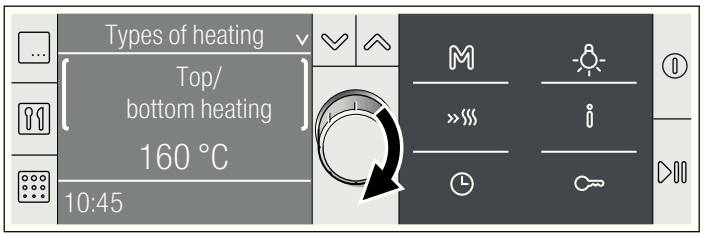

2. Press the button to switch to the temperature.

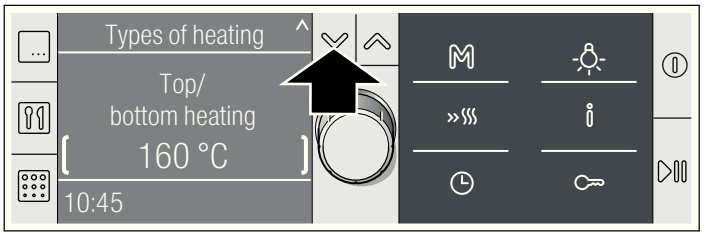

3. Turn the rotary selector to set the desired temperature.

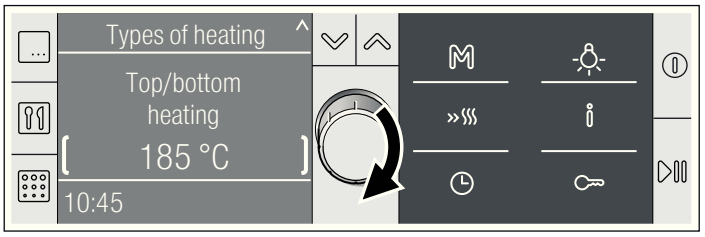

4. Press the ▷II button.
   Operation starts.

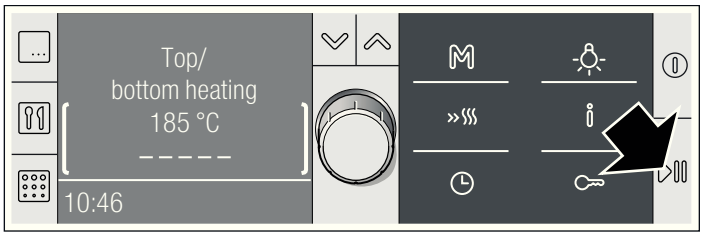

   Once the dish is ready, switch the oven off with the ⏻ button or select and apply a new operating mode.

Opening the oven door during cooking

Operation is suspended. When the door is closed again, operation resumes.

Pausing operation

Press the▷II button briefly. The oven is paused. The symbol▷II flashes. Press the▷II button again, operation continues.

Changing the temperature or grill setting

This can be done at any time. Turn the rotary selector to change the temperature or grill setting.

Cancelling operation

Press and hold the ▷II button until 3D hot air and 160 °C appear. You can now change the settings.

Calling up information

Press the i button briefly. The first item of information appears. Check each further item of information using the ↻ rotary selector. You will find information on the heating temperature, types of heating, shelf position and accessories.

Setting the cooking time

See section *Time-setting options*, setting the cooking time.

Setting a later end time

See the section entitled *Time-setting options*, Setting a later end time.

Recommended settings

If you choose a dish from the recommended settings, the ideal setting values are already specified. You can choose from many different categories. You will find recommended settings for a large number of dishes – from cake, bread, poultry, fish, meat and game through to bakes and pre-prepared products. You can change the temperature and cooking time. The type of heating is fixed.

You can access the various dishes by navigating through several selection levels. Try it out and see the range of dishes for yourself.

Selecting a dish

1. Press the ⊡ button.
   3D hot air, 160 °C are suggested in the display.
2. Turn the rotary selector anticlockwise to Recommended settings.
   The first food category appears.
3. Press the ∨ button to switch to the food category and select the required category by turning the rotary selector.
   Use the ∨ button to switch successively to the next level. Turn the rotary selector to find the next selection.
   The setting for the selected dish now appears. You can change the temperature, but not the type of heating.
4. Press the ▷II button.
   Operation starts. The cooking time is shown counting down in the status bar.

The cooking time has elapsed

A signal sounds. The oven stops heating. The status bar shows 00:00:00. You can cancel the signal early by pressing the ◷ button.

Changing the temperature or grill setting

Turn the rotary selector to change the temperature or grill setting.

Changing the cooking time

Press the ◷ button and turn the rotary selector to change the cooking time. Press the ◷ button.

Calling up information

Press the i button and check the information using the rotary selector.

Setting a later end time

See the section entitled *Time-setting options*, Setting a later end time.

Setting rapid heating

Rapid heating is not suitable for all types of heating.

Suitable types of heating

- 3D hot air
- Top/bottom heating
- HydroBaking
- Pizza setting
- Intensive heat

Suitable temperatures

Rapid heating will not work if the temperature is set to less than 100 °C. If the temperature in the cooking compartment is only slightly less than the temperature you have set, rapid heating is not necessary. It will not switch on.

Setting rapid heating

Press the »ᔕ button to activate rapid heating. The »ᔕ symbol appears next to the temperature you have set. The temperature indicator bars start filling in.

Once all the bars are filled, rapid heating is complete. You will hear a short signal. The »ᔕ symbol goes out. Place your dish in the cooking compartment.

Notes

- Rapid heating is cancelled if you change the type of heating.
- If a cooking time has been set, this runs independently of rapid heating and counts down immediately when operation is started.
- You can use the i button to check the current cooking compartment temperature during rapid heating.
- To ensure an even cooking result, do not place your dish in the cooking compartment until rapid heating is complete.

Cancelling rapid heating

Press the »ᔕ button. The symbol goes out.

Time-setting options

You can call up the time-setting options menu by pressing the ◷ button. The following functions are available:

If the oven is switched off:

- Setting the timer
- Setting the clock

If the oven is switched on:

- Setting the cooking time
- Setting a later end time
- Setting the timer

Setting the time-setting options - in brief

1. Press the ◷ button to open the menu.
2. Use the ⌄ or ⌃ button to switch to another line and set the time or cooking time with the rotary selector.
3. Press the ◷ button to close the menu.

A detailed description of how to adjust each individual function is provided below.

Setting the cooking time

If you set the cooking time for your dish, operation stops automatically once this time has elapsed. The oven stops heating.

Prerequisite: The type of heating and temperature must be set.

Note: You can only set hours and minutes.

Example in the picture: top/bottom heating setting, 180 °C, cooking time of 45 minutes

1. Press the ◷ button.
   The Time-setting options menu appears.

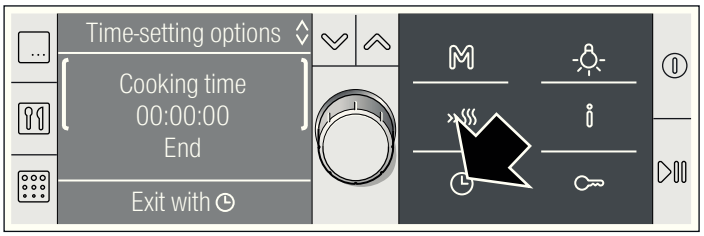

2. Turn the rotary selector to set the cooking time.

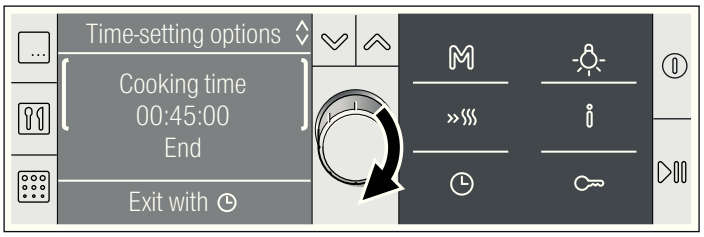

3. Press the ◷ button.
   The Time-setting options menu closes.
4. If the operation has not yet started, press the ▷II button. You can see the cooking time counting down in the status bar.

The cooking time has elapsed

A signal sounds. The oven stops heating. The status bar shows the cooking time as 00:00:00. You can cancel the signal early by pressing the ◷ button.

Cancelling the cooking time

Press the ◷ button to open the menu. Set the cooking time to 00:00:00 using the rotary selector. Press the ◷ button to close the menu.

Changing the cooking time

Press the ◷ button to open the menu. Change the cooking time using the rotary selector. Press the ◷ button to close the menu.

Setting a later end time

Please remember that easily spoiled foods must not be allowed to remain in the cooking compartment for too long.

A later end time can be set for

- all types of heating and all dishes from the recommended settings
- a variety of programmes
- and for self-cleaning

Example: you put the dish in the cooking compartment at 9.30 . It takes 45 minutes to cook and will be ready at 10.15, but you would like it to be ready at 12.45 instead.

Change the end time from 10.15 to 12.45. The oven goes into standby. Cooking starts at 12.00 and finishes at 12.45.

This function is also available for self-cleaning. You can shift the time of the cleaning operation so it is carried out at night, which means that the oven is available at all times during the day.

Setting a later end time

Precondition: The selected operation has not already begun and a cooking time has been set. The time-setting options menu ◷ is open.

1. Switch to "End" using the ⌄ button. The end time of the operation is displayed in the second line.

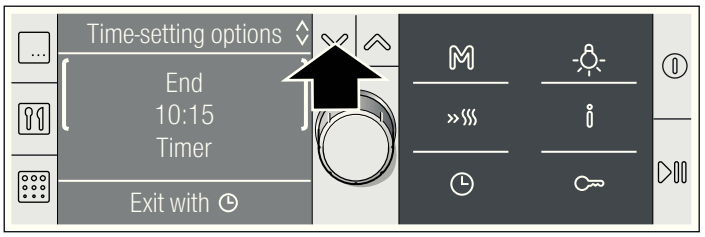

2. Set a later end time by turning the rotary selector.

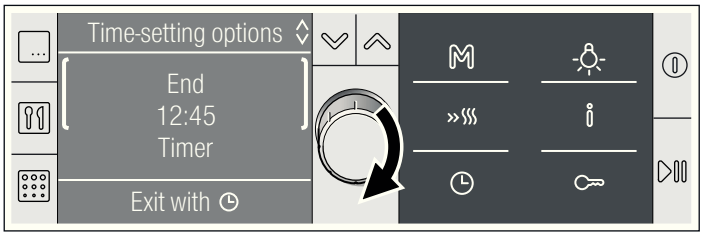

3. Press the ◷ button to close the Time-setting options menu.
4. Confirm by pressing the ▷II button.

The setting is adopted. The oven is in ◷... standby. The end time is displayed in the status bar. When cooking starts, the cooking time is shown counting down in the status bar.

The cooking time has elapsed

A signal sounds. The oven stops heating. The status bar shows the cooking time as 00:00:00. You can cancel the signal early by pressing the ◷ button.

Correcting the end time

This is possible while the oven is in standby. Press the ◷ button to open the menu. Press the ⌄ button and correct the End time using the rotary selector. Press the ◷ button to close the menu.

Cancelling the end time

This is possible while the oven is in standby. Press the ◷ button to open the menu. Press the ⌄ button and reset the End time using the rotary selector. Press the ◷ button to close the menu.

Setting the timer

The timer runs independently of the oven. You can use it as a kitchen timer and set it at any time.

1. Press the ◷ button.
   The time-setting options menu appears.
2. Set the running time for the timer using the rotary selector.
3. Press the ◷ button to close the Time-setting options menu.

The display returns to its previous state. The 🔔 symbol for the timer appears, and the time can be seen counting down.

When the time has elapsed

A signal sounds. The time has elapsed. The display shows 🔔 00:00. You can cancel the signal earlier by pressing the ◷ button.

Cancelling the timer time

Press the ◷ button to open the time-setting options menu. Using the rotary selector, turn the time back to 00:00. Press the ◷ button to close the menu.

Changing the timer time

Press the ◷ button to open the time-setting options menu. Use the rotary selector within the next few seconds to change the time on the timer. Press the ◷ button to close the menu.

Setting the clock

The oven must be switched off before you can set or change the clock.

Following a power cut

Following a power cut, the "Basic settings" heading appears in the display.

1. Set the right time using the rotary selector.
2. Press the ◷ button.

The time is applied.

Changing the clock

Example: changing from summer to winter time.

1. Press the ◷ button.
   The time-setting options menu appears.
2. Use the ⌄ button to switch to the clock.
3. Change the time using the rotary selector.
4. Press the ◷ button.

The Time-setting options menu closes. The time is changed.

Hiding the clock

The current time appears in the display when the oven is switched off. You can hide the clock. For more information, refer to the *Basic settings* section.

Memory

You can save the settings for a dish in the memory and call it up again at any time.

The memory is useful for if you frequently prepare a specific dish.

Saving settings in the memory

You cannot save the self-cleaning.

1. Specify the type of heating, temperature and, if required, a cooking time for the dish you wish to cook. Do not start. If you want to save a programme: Select the programme and enter the weight. Do not start.
2. Press and hold the M button until "Memory saved" is displayed.

The saved setting is shown in the display and can be started at any time.

Saving another setting

Enter and save the new setting. The old settings are overwritten.

Starting the memory

You can start cooking at any time using the settings saved for your dish.

1. Press the M button briefly.
   The saved settings are displayed. If "Memory location empty" appears, no settings have been saved. You cannot start the memory. Save the required setting first, as described under Saving in the memory.
2. Press the ▷II button.

The memory setting starts.

Changing the settings

This can be done at any time. The setting you originally saved appears the next time you start the memory.

Sabbath mode

When this setting is used, the temperature of the oven remains at between 85 °C and 140 °C with Top/bottom heating. You can set a time between 24 and 73 hours.

You can keep dishes in the cooking compartment hot for this time without having to switch the oven on or off.

Starting Sabbath mode

Prerequisite: "Sabbath mode, yes" is activated in the basic settings. See the *Basic settings* section.

1. Press the ⊡ button.
   3D hot air and 160 °C are suggested in the display.
2. Turn the rotary selector anti-clockwise to Sabbath mode.

3. Use the button to switch to the temperature and set the desired temperature using the rotary selector.
4. Press the button to open the time-setting options menu. 27:00 hours are suggested.
5. Turn the rotary selector to set the required cooking time.
6. Press the button.

The Sabbath mode starts. You can see the cooking time counting down in the status bar.

The cooking time has elapsed

The oven stops heating.

Setting a later end time

It is not possible to set a later end time.

Cancelling Sabbath mode

Press and hold the button until 3D hot air, 160 °C appears. You can make new settings.

Childproof lock

The oven has a childproof lock to prevent children from switching it on by accident or changing an operation that is already in progress.

Activating the childproof lock
Press and hold the button until the symbol appears. This takes about 4 seconds.
The control panel is locked.

Locking the oven door
You can change the basic settings so that the oven door also locks. To find out how to do this, refer to the *Basic settings* section. The oven door locks if the temperature in the cooking compartment reaches approx. 50 °C. The symbol appears. When the oven is switched off, the oven door locks immediately if the childproof lock has been activated.

Releasing the lock
Press and hold the button until the symbol goes out. You can make settings again.

Note: When the childproof lock is active, you can still switch the oven off using or by pressing and holding the button, set the timer, change the time and switch the audible signal off.

Basic settings

Your appliance has various basic settings, which you can adjust to suit your needs at any time.

Note: In the table, you will find all the basic settings and the associated options for changing them. Only the basic settings that correspond to the features of your specific appliance are displayed.

Basic setting	Options	Explanation
Select language: English	29 additional languages are available	Language for display texts.
Signal duration: medium	medium = 2 minutes short = 10 seconds long = 5 minutes	The duration of the audible signal once a cooking time has elapsed.
Button tone: off	on off*	Confirmation tone when a button is pressed. *Exception: A signal always sounds when you switch the oven on and off.
Display brightness: medium	day medium night	Display lighting
Contrast: - ○○○●○○○ +	e.g. sharper - ○○○○●○○ +	Display contrast
Clock display: on	on off*	Clock display when the oven is switched off * The clock is shown while the residual heat is displayed.
Oven light during operation: on	on off	Lighting in cooking compartment.
Continue when door shut: automatic	automatic off*	Way in which operation continues once the oven door has been opened and closed again. *Continue operation with
Door lock and childproof lock: no	no Yes	Locking of oven door, if childproof lock is activated.

Basic setting	Options	Explanation
Adjust individually: - ○○○●○○○ +	e.g. increasing intensity of cooking result - ○○○○●○○ +	Change cooking result of all automatic programmes. To the right = more intensive To the left = less intensive
Display button description: on	on off	The initial display appears when the oven is switched on
3D hot air Suggestion: 160 °C	From 30 to max. 275 °C	Permanently change default temperature for the type of heating.
Hot air eco Suggestion: 160 °C	From 30 to max. 275 °C	Permanently change default temperature for the type of heating.
Top/bottom heating Suggestion: 160 °C	From 30 to max. 300 °C	Permanently change default temperature for the type of heating.
HydroBaking Suggestion: 160 °C	From 30 to max. 300 °C	Permanently change default temperature for the type of heating.
Pizza setting Suggestion: 200 °C	From 30 to max. 275 °C	Permanently change default temperature for the type of heating.
Intensive heat Suggestion: 190 °C	From 30 to max. 300 °C	Permanently change default temperature for the type of heating.
Bottom heating Suggestion: 150 °C	From 30 to max. 300 °C	Permanently change default temperature for the type of heating.
Hot air grilling Suggestion: 190 °C	From 30 to max. 300 °C	Permanently change default temperature for the type of heating.
Grill, large area Suggestion: high	high medium low	Permanently change default setting for the type of heating.
Grill with rotary spit Suggestion: 250 °C	From 30 to max. 300 °C	Permanently change default temperature for the type of heating.
Grill, small area Suggestion: high	high medium low	Permanently change default setting for the type of heating.
Slow cook Suggestion: 80 °C	From 70 to max. 90 °C	Permanently change default temperature for the type of heating.
Defrost Suggestion: 30 °C	From 30 to max. 60 °C	Permanently change default temperature for the type of heating.
Plate warming Suggestion: 50 °C	From 30 to max. 70 °C	Permanently change default temperature for the type of heating.
Keep warm Suggestion: 70 °C	From 60 to max. 100 °C	Permanently change default temperature for the type of heating.
Cooling fan run-on time: medium	short medium long very long	Length of time for which the cooling fan runs on.
Cleaning system: no	no Yes	Setting that specifies whether the appliance is equipped with a self-cleaning ceiling and side panels = cleaning system
Telescopic shelf: no	no Yes	Setting that specifies whether the appliance is equipped with telescopic shelves.
Sabbath programme: no	no Yes	See the Sabbath mode section
Restore factory settings: no	no Yes	Undo all changes and restore basic settings.

Changing the basic settings

Prerequisite: The oven must be switched off.

Example: Changing the acoustic signal duration basic setting from medium to short.

1. Press and hold the ℹ button for approx. 4 seconds until the "Basic settings" heading and the first basic setting "Select language: English" appears.
2. Turn the ∨ button to select the required basic setting.
3. You can change the basic setting by turning the rotary selector.
4. You can now make further changes to the basic settings To do so, use the ∧ or ∨ button to switch to the desired setting. Change the basic setting by turning the rotary selector.
5. Press and hold the ℹ button until the clock appears. This takes about four seconds. All changes are saved.

Cancelling

Press the ⓘ button. The changes are not applied.

Automatic switch-off

Your oven has an automatic switch-off function. It is activated if no cooking time is set and the settings have not been changed for a long time. The point at which this occurs depends on the temperature or grill setting that has been set.

Switch-off activated
“Automatic switch-off" appears in the display. Operation is interrupted. Press any button to clear the text. You can make new settings.

Note: If a cooking time is set, the oven stops heating once the cooking time has elapsed. The automatic switch-off function is not necessary.

Self-cleaning

During self-cleaning, the oven heats up to approx. 500 . This burns off residues from roasting, grilling or baking and you only need to wipe the ashes from the cooking compartment.

You can choose from three cleaning levels.

Level	Degree of cleaning	Cooking time
1	gentle	approx. 1 hour, 15 minutes
2	medium	approx. 1 hour, 30 minutes
3	intensive	approx. 2 hours

The heavier and older the dirt, the higher the cleaning level should be. It is sufficient to clean the cooking compartment every two to three months. If required, you can clean the oven more frequently than this. A cleaning cycle requires only approx. 2.5 - 4.7 kilowatt hours.

Important notes

For your safety, the oven door locks automatically. The oven door cannot be opened again until the cooking compartment has cooled slightly and the padlock symbol for the locking mechanism disappears.

The oven light in the cooking compartment does not come on during Self-cleaning.

⚠ Risk of burns!

- The cooking compartment will become very hot during the Self-cleaning cycle. Never open the appliance door or move the locking latch by hand. Allow the appliance to cool down.Keep children at a safe distance.
- The appliance will become very hot on the outside during the Self-cleaning cycle. Never touch the appliance door. Allow the appliance to cool down.Keep children at a safe distance.

⚠ Risk of fire!

The appliance will become very hot on the outside during the Self-cleaning cycle. Never hang flammable objects, e.g. tea towels, on the door handle. Do not place anything against the front of the appliance.

Before self-cleaning

The cooking compartment must be empty. Remove accessories, ovenware and shelf rails from the cooking compartment. Please see the *Care and cleaning* section for how to unhook the rails. If the rails have not been removed, a signal will sound. The self-cleaning programme will not start.

Clean the oven door and the along the edges of the cooking compartment in the area around the seal. Do not clean the seal.

⚠ Risk of fire!

Loose food residues, grease and meat juices may catch fire. Wipe the cooking compartment and the accessories that are to be cleaned at the same time with a damp cloth.

Cleaning accessories at the same time

The rails are not suitable for the self-cleaning programme. Take them out of the cooking compartment. If you wish to clean accessories at the same time, use the accessory holders. You can use the holder to clean enamelled accessories without a non-stick coating at the same time, e.g. the universal pan. Always only clean one accessory at a time.

Non-enamelled accessories, e.g. the wire rack, are not suitable for the self-cleaning programme. Remove them from the cooking compartment.

⚠ Risk of serious damage to health.!

Never clean non-stick baking trays and baking tins at the same time using the self-cleaning programme. High temperatures damage the non-stick coating and poisonous gases are released.

Insert the left and right-hand accessory holders.

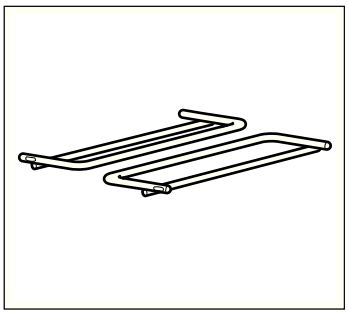

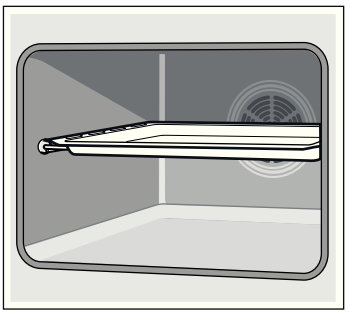

Setting the cleaning level

1. Press the button.
   Cleaning level 3 is suggested. You can start the self-cleaning immediately by pressing the button.
   If you wish to change the cleaning level:
2. Select the desired cleaning level using the rotary selector.
3. Press the button to start the cleaning operation.

The oven door locks shortly after operation starts. The symbol lights up to indicate that the lock has been activated.

Once cleaning has finished

The oven stops heating. The cleaning time is shown in the status bar as 00:00:00. You will not be able to open the oven door until the symbol goes out.

Cancelling cleaning

Switch off the oven with . The oven door remains locked while the symbol is lit.

Adjusting the cleaning level

Once cleaning starts, the cleaning level can no longer be changed.

Setting cleaning to run overnight

So that you can use your oven throughout the day, delay the end of the cleaning process to during the night. See the *Time-setting options* section, setting a later end time.

After self-cleaning

Once the cooking compartment has cooled down, wipe out the ash that has been left behind in the cooking compartment with a damp cloth.

Care and cleaning

With good care and cleaning, your oven will remain clean and fully-functioning for a long time to come. Here we will explain how to maintain and clean your oven correctly.

Notes

- Slight differences in the colours on the front of the oven are caused by the use of different materials, such as glass, plastic and metal.
- Shadows on the door panel which look like streaks, are caused by reflections made by the oven light.
- Enamel is baked on at very high temperatures. This can cause some slight colour variations. This is normal and does not affect their function. The edges of thin trays cannot be completely enamelled. As a result, these edges can be rough. This will not impair the anti-corrosion protection.

Cleaning agents

To ensure that the different surfaces are not damaged by using the wrong cleaning agent, observe the information in the table. Do not use

- sharp or abrasive cleaning agents,
- cleaning agents with a high concentration of alcohol,
- hard scouring pads or sponges,
- high-pressure cleaners or steam cleaners.

Wash new sponge cloths thoroughly before use.

Area	Cleaning agents
Oven front	Hot soapy water: Clean with a dish cloth and dry with a soft cloth. Do not use glass cleaners or glass scrapers.
Stainless steel	Hot soapy water: Clean with a dish cloth and dry with a soft cloth. Remove flecks of limescale, grease, starch and albumin (e.g. egg white) immediately. Corrosion can form under such residues. Special stainless steel cleaning products suitable for warm surfaces are available from our after-sales service or from specialist retailers. Apply a thin layer of the cleaning product with a soft cloth.
Door panels	Glass cleaner: Clean with a soft cloth. Do not use a glass scraper.
Door cover	Stainless steel cleaning agents (available from our after-sales service or from specialist retailers): Please observe the manufacturer's instructions.
Cooking compartment	Hot soapy water or a vinegar solution: Clean with a dish cloth. If there are heavy deposits of dirt, use a stainless steel scouring pad or oven cleaner. Only use when the cooking compartment is cold. It is best to use the self-cleaning function. Observe the instructions in the *Self-cleaning* section when doing so.
Glass cover for the oven light	Hot soapy water: Clean with a dish cloth.
Shelves	Hot soapy water: Soak and clean with a dish cloth or brush.
Telescopic shelves	Hot soapy water: Clean with a dish cloth or a brush. Do not soak. Clean in the dishwasher, or in the oven as part of the self-cleaning programme. The rails may be damaged causing them to jam.
Accessories	Hot soapy water: Soak and clean with a dish cloth or brush.

Detaching and refitting the rails

The rails can be removed for cleaning. The oven must have cooled down.

Detaching the rails

1. Lift up the front of the rail
2. and unhook it (figure A).
3. Then pull the whole rail forward
4. and remove it (Fig. B).

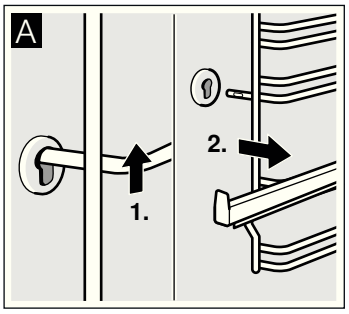

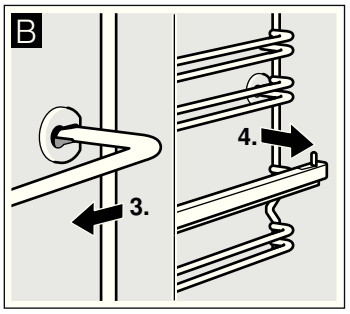

Clean the rails with cleaning agent and a sponge. For stubborn deposits of dirt, use a brush.

Refitting the rails

1. First insert the rail into the rear socket, press it to the back slightly (figure A),
2. and then hook it into the front socket (figure B).

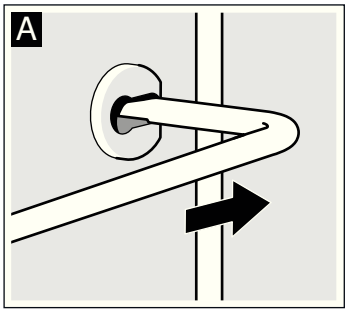

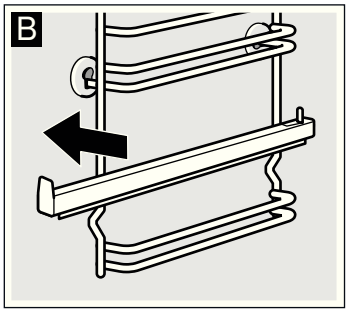

The rails fit only on the right or the left side. The pull-out rail must be pulled out forwards. The indentation on the rail must always face downwards.

Detaching and attaching the oven door

For cleaning purposes and to remove the door panels, you can detach the oven door.

The oven door hinges each have a locking lever. When the locking levers are closed (figure A), the oven door is secured in place. It cannot be detached. When the locking levers are open in order to detach the oven door (Fig. B), the hinges are locked. They cannot snap shut.

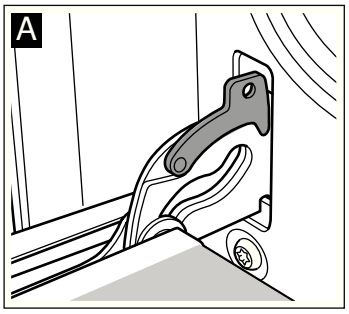

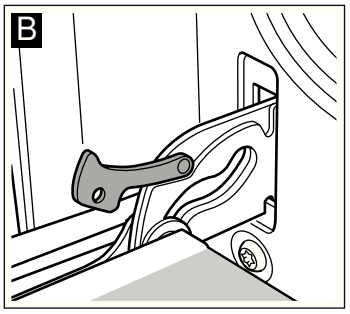

⚠ **Risk of injury!**

Whenever the hinges are not locked, they snap shut with great force. Ensure that the locking levers are always fully closed or, when detaching the oven door, fully open.

Detaching the door

1. Open the oven door fully.
2. Fold up the two locking levers on the left and right (figure A).
3. Close the oven door as far as the limit stop. With both hands, grip the door on the left and right-hand sides. Close the door a little further and pull it out (figure B).

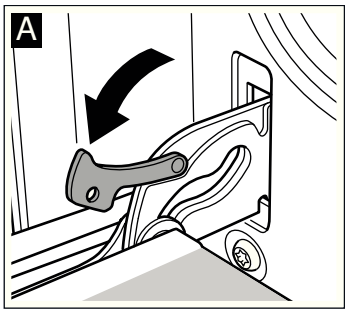

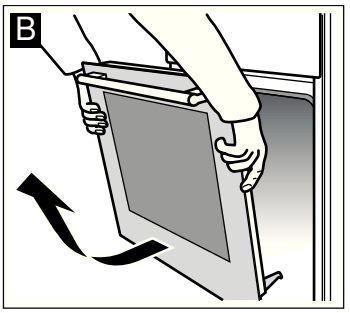

Attaching the door

Reattach the oven door in the reverse sequence to removal.

1. When attaching the oven door, ensure that both hinges are inserted straight into the opening (figure A).
2. The notch on the hinge must engage on both sides (figure B).

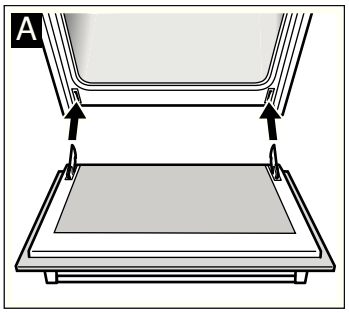

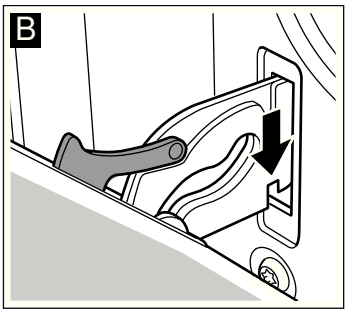

3. Fold back both locking levers (figure C). Close the oven door.

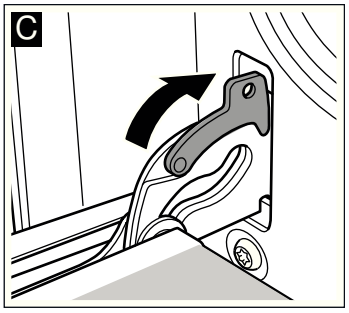

⚠ **Risk of injury!**

If the oven door falls out accidentally or a hinge snaps shut, do not reach into the hinge. Call the after-sales service.

Removing the door cover

The oven door cover can become discoloured. To carry out thorough cleaning, you can remove the cover.

1. Open the oven door fully.
2. Unscrew the oven door cover. To do this, undo the left and right screws (figure A).
3. Remove the cover (figure B).

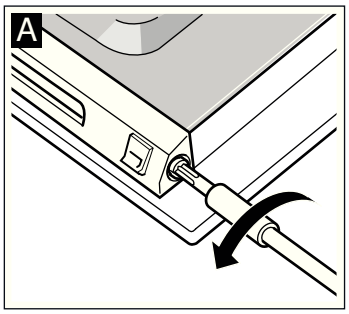

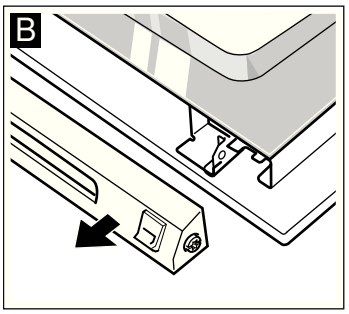

Make sure that the oven door is not closed while the cover is removed. The inner panel may be damaged.

Clean the cover with a stainless-steel cleaning agent.

4. Replace the cover and secure it in position.
5. Close the oven door.

Removing and installing the door panels

To facilitate cleaning, you can remove the glass panels from the oven door.

Removal

1. Detach the oven door and lay it on a cloth with the handle facing down.
2. Unscrew the cover at the top of the oven door. To do this, undo the left and right screws (fig. A).
3. Lift the top panel up and out (fig. B).

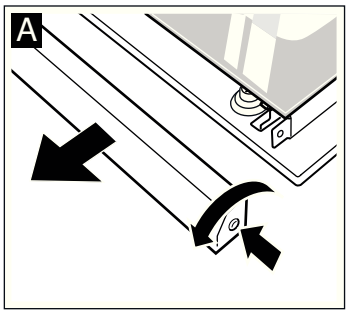

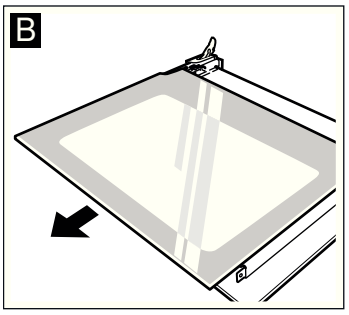

4. Unscrew the retaining clips on the right and left. Lift the panel and remove the brackets from the panel (fig. C). Take out the panel.

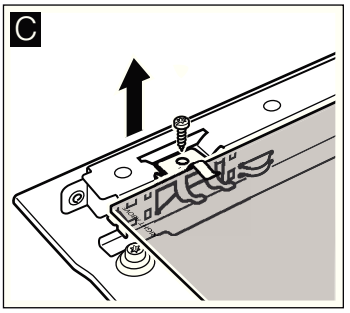

Clean the panels with glass cleaner and a soft cloth.

Do not use sharp or abrasive materials or a glass scraper. This may damage the glass.

Fitting

When fitting, make sure that the lettering "right above" is upside down at the bottom left.

1. Insert the panel diagonally towards the back (fig. A).
2. Stick the retaining clips onto the right and left-hand sides of the panel, aligning them so that the carriers are over the screw holes, and then screw in place (fig. B).

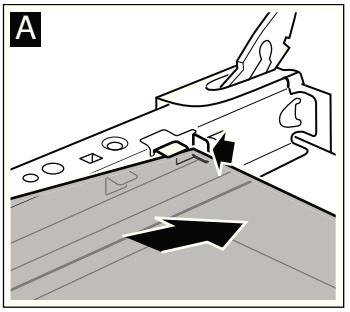

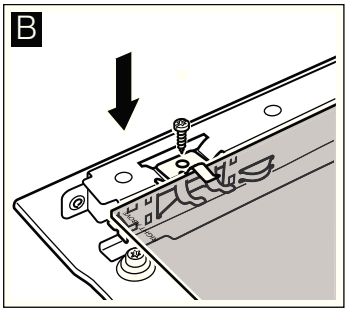

3. Insert the uppermost panel diagonally towards the back. The smooth surface must face outwards.
4. Put the cover back in place and screw it on.
5. Attach the oven door.

Do not use the oven again until the panels have been correctly fitted.

Troubleshooting

Malfunctions often have simple explanations. Refer to the table before calling the after-sales service as you may be able to remedy the fault yourself.

Malfunction table

If a dish does not turn out exactly as you wanted, refer to the *Tested for you in our cooking studio* section, where you will find plenty of cooking tips and tricks.

⚠ **Risk of electric shock!**

Incorrect repairs are dangerous. Repairs may only be carried out by one of our trained after-sales engineers.

Problem	Possible cause	Note/remedy
The appliance does not work.	Faulty circuit breaker	Look in the fuse box and check that the circuit breaker is in working order.
The text "Time 00:00" appears in the display. The time is not the current time.	Power cut	Reset the current time and press the ◷ button.

Problem	Possible cause	Note/remedy
The oven door cannot be opened. The text "Time 00:00" is shown in the display. The time displayed is not the current time.	Power cut during self-cleaning.	Set the current time and press the ◷ button. Wait until the cooking compartment has cooled down. The 🔒 symbol disappears. You can now open the oven door.
The oven does not heat up or the type of heating selected cannot be set.	Type of heating not recognised	Make the settings again.
The oven does not heat up. The text “Demo" is displayed.	The oven is in demo mode.	Switch off the circuit breaker in the fuse box and then switch back on after approx. 20 seconds. In the next 2 minutes hold the ⊶ button down for four seconds until the text "Demo" disappears.
"Automatic switch-off" appears in the display.	Automatic switch-off has been activated. The oven switches off.	Press any button. The text disappears. You can make settings again.

Error messages with E

If an error message with E is shown in the display, press the ◷ button. This cancels the error message. You may then have to reset the time. If the error is shown again, call the after-sales service.

You can take remedial action yourself if the following error messages are displayed.

Error message	Possible cause	Note/remedy
E011	A button was pressed for too long or has jammed.	Press all buttons individually. Check that the buttons are clean. If the error message remains, please contact the after-sales service.
E115	The temperature in the cooking compartment is too high.	The oven door locks. Wait until the cooking compartment has cooled down. Clear the error message with the ◷ button.

Replacing the bulb in the oven ceiling light

If the bulb in the oven light fails, it must be replaced. Heat-resistant, 10 watt, 12 V halogen bulbs are available from the after-sales service or specialist retailers. When handling the halogen bulb, use a dry cloth. This will increase the service life of the bulb. Only use these bulbs.

⚠ **Risk of electric shock!**

Switch off the circuit breaker in the fuse box.

1. Place a tea towel in the oven when it is cold to prevent damage.
2. Remove the glass cover. To do this, press the metal tabs to the side with your thumb (Fig. A).
3. Pull out the bulb, do not turn it (Fig. B). Insert the new bulb, making sure that the pins are in the correct position. Push the bulb in firmly.

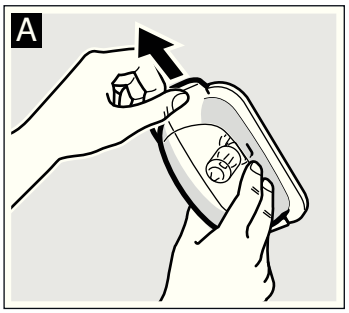

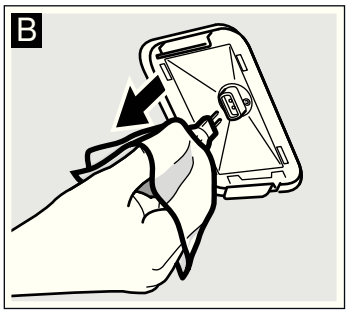

4. Refit the glass cover. When doing this, insert it on one side and press firmly on the other side. The glass cover will click into place.
5. Remove the tea towel and switch on the circuit breaker.

Replacing the bulb in the left-hand oven light

If the bulb in the oven light fails, it must be replaced. Heat-resistant, 10 watt, 12 V halogen bulbs are available from the after-sales service or specialist retailers. When handling the halogen bulb, use a dry cloth. This will increase the service life of the bulb. Only use these bulbs.

⚠ **Risk of electric shock!**

Switch off the circuit breaker in the fuse box.

1. Place a tea towel in the oven when it is cold to prevent damage.
2. Remove the glass cover. To do this, open the glass cover from the bottom with your hand (Fig. A). If the glass cover is difficult to remove, use a spoon as an aid.
3. Pull out the bulb (do not turn it) (Fig. B). Insert the new bulb, making sure that the pins are in the correct position. Push the bulb in firmly.

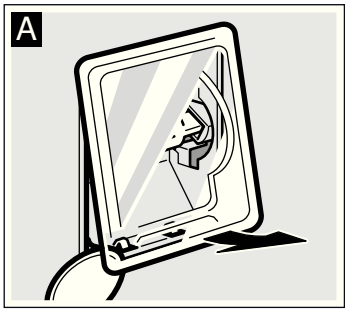

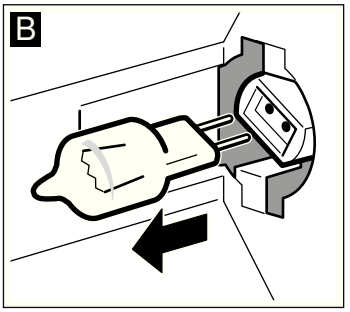

4. Refit the glass cover. Make sure that the curvature in the glass is on the right. Insert the glass at the top and push it in firmly at the bottom (Fig. C). The glass cover will click into place.

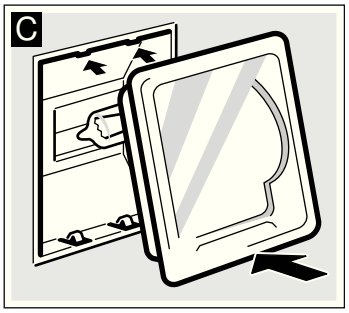

5. Remove the tea towel and switch on the circuit breaker.

Glass cover

You must replace a damaged glass cover. Suitable glass covers may be obtained from the after-sales service. Please specify the E number and FD number of your appliance.

After-sales service

Our after-sales service is there for you if your appliance needs to be repaired. We will always find the right solution in order to avoid unnecessary visits from a service technician.

E number and FD number

When calling us, please give the product number (E no.) and the production number (FD no.) so that we can provide you with the correct advice. The rating plate containing these numbers can be found on the right-hand side of the oven door. You can make a note of the numbers of your appliance and the telephone number of the after-sales service in the space below to save time should it be required.

E no.	FD no.

After-sales service ☏

Please note that there will be a fee for a visit by a service technician in the event of a malfunction, even during the warranty period.

Please find the contact data of all countries in the enclosed customer service list.

To book an engineer visit and product advice

GB 0844 8928979
Calls from a BT landline will be charged at up to 3 pence per minute. A call set-up fee of up to 6 pence may apply.

IE 01450 2655

Trust the expertise of the manufacturer, and rest assured that the repair will be carried out by trained service technicians using original spare parts for your domestic appliance.

Energy and the environment

Your new appliance is particularly energy-efficient. You will find information here about the energy-optimised "Hot air eco" heating type. You will also find tips on how to save even more energy with your appliance and how to dispose of it in an environmentally friendly way.

Hot air eco heating type

With the energy-efficient "Hot air eco" heating type, you can prepare many dishes on one level. The fan distributes the energy-optimised heat from the ring heating element in the back wall evenly around the cooking compartment. You can achieve successful baking, roasting and cooking without having to preheat the oven.

Notes

- Place the items in the empty cooking compartment before it has heated up. Otherwise, energy optimisation will not have any effect.
- Only open the oven door during cooking when required.

Table

The table contains a selection of dishes best suited to Hot air eco. It provides details on suitable temperatures and cooking times. You can see which accessories and shelf positions are suitable.

The temperature and cooking time depend on the amount, composition and quality of the food. This is why temperature ranges are given in the table. You should try the lower temperature first, since a lower temperature results in more even browning. You can increase the temperature next time if necessary.

Place the baking tins and cookware in the centre of the wire rack. If you are grilling food directly on the wire rack, the universal pan should also be inserted at level 1. Fat and juices are caught in the universal pan, which keeps the oven cleaner.

Dishes using Hot air eco	Accessories	Level	Temperature in °C	Cooking time in minutes
Cakes and pastries				
Victoria sandwich	Wire rack + 2 x Ø 20 cm tins	3	160-180	25-35
Light fruit cake	Wire rack + high Ø 20 cm tin	2	150-160	90-100
Rich fruit cake	Wire rack + Ø 23 cm high round tin or 20 cm square tin	2	130-140	180-190
Fruit crumble	Wire rack + flat glass dish	3	160-170	30-45
Sponge cake (fatless)	Wire rack + baking tin (dark coated)	2	160-180	30-40
Swiss roll	Wire rack + swiss roll tin	3	180-190	10-15
Apple tart	Wire rack + Ø 20 cm plate or pie tin	3	190-200	55-65
Quiche	Wire rack + quiche tin (dark coated)	3	180-190	40-50
(White) Bread	Wire rack + loaf tin (1 x 900 g or 2 x 450 g)	3	200-210	30-35

Dishes using Hot air eco	Accessories	Level	Temperature in °C	Cooking time in minutes
Scones	Universal pan	3	180-190	20-30
Biscuits	Universal pan	3	160-170	15-20
Jam tarts	Wire rack + 12-cup tin	2	180-190	20-25
Soufflé	Wire rack + 1,2 l soufflé dish	2	160-170	40-50
Pie	Wire rack + pie dish	3	180-190	50-60
Jacket potatoes	Universal pan	3	160-170	70-80
Frozen products				
Pizza with a thin base	Universal pan	3	190-210	15-25
Pizza with a thick base	Universal pan	2	180-200	20-30
Chips	Universal pan	3	200-220	20-30
Fish fingers	Universal pan	3	220-240	10-20
Rolls	Universal pan	3	180-200	10-15
Fish				
Sea bream, x 2, 750 g each	Universal pan	2	170-190	50-60
Sea bream with salted, crisped skin, 900 g	Universal pan	2	170-190	60-70
Pike, 1000 g	Universal pan	2	170-190	60-70
Trout, x2, 500 g each	Universal pan	2	170-190	45-55
Fish fillets, 100 g each	Wire rack + glass roasting dish with lid	2	190-210	30-40
Casserole				
Diced meat (beef, pork, lamb)	Wire rack + glass roasting dish with lid	2	140	120-150
Braising steaks	Wire rack + glass roasting dish with lid	2	140	120-150
Meat				**Time, min. per 500 g + add. time**
Beef, slow roast joint	Universal pan with insert grid	1	130-140	40+40
Beef, roast joint	Universal pan with insert grid	1	180-190	35+35
Beef, loin joint	Universal pan with insert grid	1	170-180	30+30
Lamb, leg	Universal pan with insert grid	1	160-170	30+25

Saving energy

- Only preheat the oven if this is specified in the recipe or in the operating instruction tables.
- Use dark, black lacquered or enamelled baking tins. They absorb the heat particularly well.
- Open the oven door as infrequently as possible while you are cooking, baking or roasting.
- It is best to bake several cakes one after the other. The oven is still warm. This reduces the baking time for the second cake. You can also place two loaf tins next to each other.
- For longer cooking times, you can switch the oven off 10 minutes before the end of the cooking time and use the residual heat to finish cooking.

Environmentally-friendly disposal

Dispose of packaging in an environmentally-friendly manner.

This appliance complies with European Directive 2002/96/EC on Waste Electrical and Electronic Equipment (WEEE). The directive gives a framework for the collection and recycling of old appliances, which is valid across the EU.

Automatic programmes

The automatic programmes help you to achieve elaborate pot roasts, juicy roasts and delicious stews very easily. You do not have to worry about turning and basting and the cooking compartment remains clean.

The cooking result depends on the quality of the meat and the size and type of ovenware. Use an oven cloth or oven gloves when you take the finished dish out of the cooking compartment. The ovenware will be very hot. Take care when opening the ovenware, as hot steam will escape.

Ovenware

Automatic programmes are only suitable for roasting meat in ovenware with lid, with the exception of browning a ham joint. Only use ovenware with a tightly fitting lid. Also observe the information from the ovenware manufacturer.

Suitable cookware

We recommend heat-resistant cookware (up to 300 °C) made from glass or glass ceramic. Roasting dishes made from stainless steel are not ideal. Their shiny surface reflects a high proportion of the thermal radiation. The food will not brown as

much and the meat will be less well cooked. If you use a stainless-steel roasting dish, remove the lid once the programme has finished. Grill the meat at grill setting 3 for 8 to 10 minutes more. The dish browns more quickly if you use a roasting dish made of enamelled steel, cast iron or diecast aluminium. Add a little more liquid.

Unsuitable cookware

Cookware made of bright, shiny aluminium, unglazed clay or plastic, and cookware with plastic handles, is not suitable.

Size of the ovenware

The meat should cover about two thirds of the ovenware base. This will ensure that you get good meat juices.

The distance between the meat and the lid must be at least 3 cm. The meat may expand during the roasting process.

Preparing the dish

You can use fresh or frozen meat. We recommend fresh chilled meat.

Select a suitable roasting dish.

Weigh the fresh or frozen meat, poultry or fish. You will find detailed information in the corresponding tables. You need the weight in order to make the setting.

Season the meat. Season frozen meat in the same way as fresh meat.

Many dishes require the addition of liquid. Pour enough liquid into the ovenware so that the base is covered to a depth of approx. ½ cm. If the table specifies “a little” liquid, 2-3 tablespoons are usually sufficient. If the table says “Yes”, feel free to add more. Observe the instructions given before and in the tables.

Cover the ovenware with a lid. Place it on the wire rack at level 2.

For some dishes, it is not possible to set a later end time. These dishes are marked with an asterisk *.

Always place the ovenware into the cooking compartment without preheating it.

Programmes

Poultry

Place poultry in the roasting dish, breast side up. The programme is not suitable for stuffed poultry.

When cooking several drumsticks, set the weight of the heaviest drumstick. The drumsticks must be approximately the same weight.

Example: For 3 chicken drumsticks of 300 g, 320 g and 400 g, set 400 g.

Just as with drumsticks, if you want to prepare two chickens of similar size in one roasting dish, make settings according to the weight of the heavier chicken.

When cooking turkey breast, add plenty of water to make sure that the meat does not dry out.

Programmes	Weight range in kg	Add liquid	Weight setting
Poultry			
Chicken, fresh*	0.7-2.0	No	Weight of meat
Poulard, fresh*	1.4-2.3	No	Weight of meat
Duck, fresh*	1.6-2.7	No	Weight of meat
Goose, fresh*	2.5-3.5	No	Weight of meat
Small turkey, fresh*	2.5-3.5	No	Weight of meat
Turkey breast, fresh*	0.5-2.5	A generous amount	Weight of meat
Drumsticks, fresh* e. g. chicken, duck, goose, turkey drumsticks	0.3-1.5	No	Weight of heaviest drumstick
Drumsticks, frozen* e. g. chicken, duck, goose, turkey drumsticks	0.3-1.5	No	Weight of heaviest drumstick

Meat

Pour the specified amount of liquid into the ovenware.

Beef

When cooking pot roasts, ensure that sufficient liquid is added. You can also use the marinade.

When cooking Viennese boiled beef, add enough liquid (water or stock) to almost cover the meat.

Cook sirloin fatty-side up.

Programmes	Weight range in kg	Add liquid	Weight setting
Beef			
Pot roast, fresh e g. prime rib, boned shoulder, shoulder, marinated beef	0.5-3.0	Yes	Weight of meat
Pot roast, frozen* e g. prime rib, boned shoulder, shoulder	0.5-2.0	Yes	Weight of meat
Sirloin, fresh, medium e. g. loin	0.5-2.5	No	Weight of meat
Sirloin, fresh, rare e. g. loin	0.5-2.5	No	Weight of meat

Programmes	Weight range in kg	Add liquid	Weight setting
Sirloin, frozen, well-done* e. g. loin	0.5-2.0	No	Weight of meat
Meat loaf*	0.3-3.0	No	Total weight
Viennese boiled beef, fresh	0.5-2.5	A generous amount	Weight of meat

Veal
To make osso buco, place generous quantities of vegetables (celery, tomatoes, carrots) into the dish and spread out the leg cuts on top. If necessary, add liquid (stock).

Programmes	Weight range in kg	Add liquid	Weight setting
Veal			
Joint, fresh, lean e. g. topside, flank	0.5-3.0	Yes	Weight of meat
Joint, fresh, marbled e. g. neck, scrag end	0.5-3.0	A little	Weight of meat
Joint, frozen, lean* e. g. topside, flank	0.5-2.0	Yes	Weight of meat
Joint, frozen, marbled* e. g. neck, scrag end	0.5-2.0	A little	Weight of meat
Knuckle on the bone, fresh	0.5-2.5	Yes	Weight of meat
Osso buco e. g. veal leg slices with vegetables	0.5-3.5	Yes	Weight of meat

Pork
For meat that is still on the bone, place it into the roasting dish with the exposed bone facing down.

Joints with a crust should be placed in the dish with the crust side up. Before cooking, score the rind in a criss-cross pattern, without damaging the meat.

Place ham joints in the dish with the layer of fat facing upwards. Cook in an uncovered dish until a brown crust forms.

For joints, set the weight of the meat; for rolled joints and meat loaf, set the total weight.

Programmes	Weight range in kg	Add liquid	Weight setting
Pork			
Neck joint, fresh, boned	0.5-3.0	Yes	Weight of meat
Neck joint, fresh, on the bone	0.5-3.0	Yes	Weight of meat
Neck joint, frozen, boned*	0.5-2.0	Yes	Weight of meat
Neck joint, frozen, on the bone*	0.5-2.0	Yes	Weight of meat
Roast cutlet, fresh, on the bone	0.5-3.0	Yes	Weight of meat
Roast loin, fresh	0.5-2.5	Yes	Weight of meat
Rolled roasting joint, fresh	0.5-3.0	Yes	Total weight
Joint with crust, fresh e. g. belly	0.5-3.0	No	Weight of meat
Joint with crust, fresh e. g. shoulder	0.5-3.0	No	Weight of meat
Meat loaf*	0.3-3.0	No	Total weight
Smoked pork on the bone, fresh	0.5-3.0	Yes	Weight of meat
Ham joint, fresh, cured, cook	1.0-4.0	A little	Weight of meat
Ham joint, fresh, cured, brown crust*	1.0-4.0	No	Weight of meat

Lamb and mutton
When roasting joints of meat and drumsticks, set the weight of the meat. When roasting meat loaf, set the total weight.

Programmes	Weight range in kg	Add liquid	Weight setting
Lamb			
Leg, fresh, boned, well-done	0.5-2.5	A little	Weight of meat
Leg, fresh, boned, medium	0.5-2.5	No	Weight of meat
Leg, fresh, on the bone, well-done	0.5-2.5	A little	Weight of meat

Programmes	Weight range in kg	Add liquid	Weight setting
Leg, frozen, boned, well-done	0.5-2.0	A little	Weight of meat
Leg, frozen, boned, medium*	0.5-2.0	No	Weight of meat
Leg, frozen, on the bone, well-done*	0.5-2.0	A little	Weight of meat
Meat loaf*	0.3-3.0	No	Total weight

Programmes	Weight range in kg	Add liquid	Weight setting
Mutton			
Joint of mutton, fresh e. g. shoulder	0.5-3.0	Yes	Weight of meat
Joint of mutton, frozen* e. g. shoulder	0.5-2.0	Yes	Weight of meat

Game

Game can be covered with bacon, which keeps the meat more succulent, but means that it will not brown as much. To create a more delicate taste, you can marinate the game overnight in the fridge in buttermilk, wine or vinegar, before cooking.

When cooking more than one haunch of hare, set the weight of the heaviest haunch.

Rabbit can also be cooked pre-cut into portions. Set the total weight.

Programmes	Weight range in kg	Add liquid	Weight setting
Game			
Joint of venison, fresh e. g. shoulder, breast	0.5-3.0	Yes	Weight of meat
Joint of venison, frozen* e. g. shoulder, breast	0.5-2.0	Yes	Weight of meat
Leg of roe venison, fresh, boned	0.5-3.0	Yes	Weight of meat
Leg of roe venison, frozen*, boned	0.5-2.0	Yes	Weight of meat
Haunch of hare, fresh, on the bone	0.3-0.6	Yes	Weight of heaviest haunch
Haunch of hare, frozen*, on the bone	0.3-0.6	Yes	Weight of heaviest haunch
Wild boar joint, fresh e. g. shoulder, breast	0.5-3.0	Yes	Weight of meat
Wild boar joint, frozen* e. g. shoulder, breast	0.5-2.0	Yes	Weight of meat
Rabbit, fresh	0.5-3.0	Yes	Weight of meat

Fish

Prepare the fish, then add vinegar, lemon juice or white wine and salt as usual.

For braised fish: Pour some liquid (e. g. wine or lemon juice) into the cookware, ½ cm deep.

For baked fish: Turn the fish in flour and brush with melted butter.

Whole fish turns out particularly well if it is placed in the dish in a swimming position In other words, the dorsal fin is pointing upwards. To ensure that the fish remains in position, place half a potato or a small, ovenproof container into the stomach cavity.

When cooking more than one fish, set the total weight. However, the fish must be roughly the same size or the same weight. Example: For two trout of 0.6 kg and 0.5 kg, set 1.1 kg.

Programmes	Weight range in kg	Add liquid	Weight setting
Fish			
Trout, fresh, braise*	0.3-1.5	Yes	Total weight
Trout, fresh, bake*	0.3-1.5	No	Total weight
Pike-perch, fresh, braise*	0.5-2.0	Yes	Total weight
Pike-perch, fresh, bake*	0.5-2.0	No	Total weight
Cod, fresh, braise*	0.5-2.0	Yes	Total weight
Cod, fresh, bake*	0.5-2.0	No	Total weight
Carp, fresh, braise*	0.8-2.0	Yes	Total weight
Carp, fresh, bake*	0.8-2.0	No	Total weight

Meat loaf

Use fresh minced meat.

Set the total weight of the meat loaf.

The recipe can be improved by adding diced vegetables or cheese.

Programmes	Weight range in kg	Add liquid	Weight setting
Meat loaf			
Made from fresh beef*	0.3-3.0	No	Total weight
Made from fresh pork*	0.3-3.0	No	Total weight
Made from fresh lamb*	0.3-3.0	No	Total weight
Made from fresh, mixed meat*	0.3-3.0	No	Total weight

Stew

You can combine various types of meat and fresh vegetables.

Cut the meat into bite-sized pieces. Use whole chicken portions.

Add between the same and double the quantity of vegetables to the meat. Example: For 0.5 kg of meat, add 0.5 kg to 1 kg of fresh vegetables.

If you wish the meat to brown, add it as the last ingredient to the roasting dish on top of the vegetables. If you do not want it to brown so much, mix the meat in among the vegetables.

When cooking a stew with meat, set the weight of the meat. If you want the vegetables to be softer, set the total weight.

Firm types of vegetables are suitable for making vegetable stew, such as carrots, green beans, white cabbage, celery and potatoes. The smaller you cut the vegetables, the softer they will become. So that the vegetables are not browned too much, cover them with liquid.

Programmes	Weight range in kg	Add liquid	Weight setting
Stew			
With meat e. g. beef stew	0.3-3.0	Yes	Weight of meat
With vegetables e. g. vegetable stew	0.3-3.0	Yes	Total weight
Goulash	0.3-3.0	Yes	Weight of meat
Roulades	0.3-3.0	Yes	Weight of meat

Selecting and setting a programme

Example in the picture: programme for frozen joint of veal, lean, 1.3 kg.

1. Press the button.
The first programme group and first programme appear.

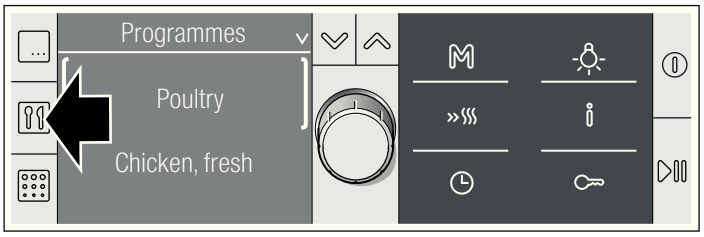

2. Select the programme group by turning the rotary selector.

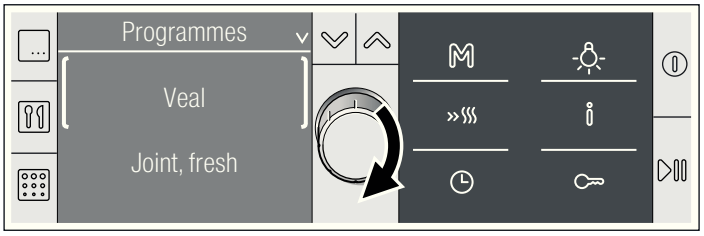

3. Press the button to change the line.

4. Use the rotary selector to select the programme.

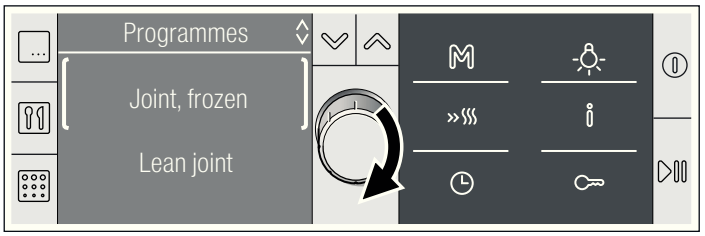

In some of the programmes, you can make further specifications, e. g. Joint of veal option, followed by Lean joint or Marbled joint. Press the button and make your selection using the rotary selector.

A suggested weight appears for the programme selected.

5. Press the button.

6. Use the rotary selector to specify the weight of the dish.
If you switch to the lower line, you can alter the cooking result (see Adjust individually).

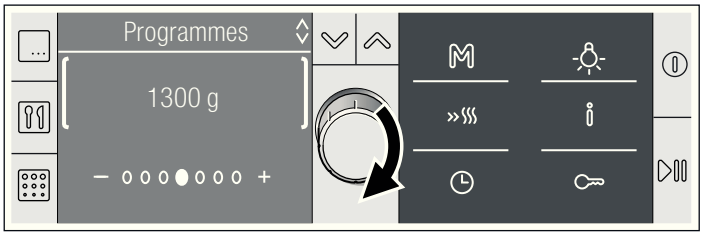

7. Press the button.
The programme starts. You can see the cooking time counting down in the status bar.

The programme has ended

A signal sounds. The oven stops heating. You can cancel the signal earlier by pressing the button. The elapsed cooking time in the status bar is 00:00:00.

Cancelling the programme

Press and hold the button until 3D hot air, 160 °C appears. You can now change the settings.

Calling up information

Press the button briefly. Check each item of information using the rotary selector.

Setting a later end time

See the section entitled *Time-setting options - Setting a later end time*.

Adjust individually

If the cooking result of a particular programme does not meet your expectations, you can adapt it to your requirements the next time.

Adjust the settings as described in points 1 to 6.
Then press the button and move the illuminated field using the rotary selector.
- ○○○●○○○ +
To the left = cooking result less well done.
To the right = cooking result more well done.

The cooking time for the programme changes.

Tips for the automatic programmes

The weight of the joint or poultry is greater than the weight ranges available.	The weight range is deliberately limited. For very large joints, it is often impossible to obtain a sufficiently large roasting dish. Prepare large pieces with Top/bottom heating or Hot air grilling.
The joint has cooked well, but the juices are too dark.	Select a smaller dish or use more liquid.
The joint has cooked well, but the juices are too clear and watery.	Select a larger dish or use less liquid.
The joint is too dry on the top.	Use a dish with a tightly fitting lid. Very lean meat will remain more succulent if it is covered with rashers of bacon.
The joint looks good, but there was a burning smell during roasting.	The lid of the roasting dish is not closed properly, or the meat has expanded and has pushed up the lid. Always use the right lid for your ovenware. Make sure that there is at least 3 cm between the meat and the lid.
You wish to prepare frozen meat.	Season frozen meat in the same way as fresh meat. Caution: For frozen meat it is not possible to delay the end time. The meat would defrost during the waiting time and would be inedible.
The meat is not cooked well enough or is too well cooked.	Change the settings the next time. You will find information on this in the *Automatic programmes, Individual Settings* section.

Tested for you in our cooking studio

Here you will find a selection of dishes and the ideal settings for them. We will show you which type of heating and which temperature are best suited for your dish. You can find information about suitable accessories and the height at which they should be inserted. There are also tips about cookware and preparation methods.

Notes

- Whether you should preheat or place food into a cold oven, is indicated in the respective tables.

  Do not line the accessories with greaseproof paper until after they have been preheated.
- The times specified in the tables are guidelines only. They will depend on the quality and composition of the food.
- Use the accessories supplied. Additional accessories may be obtained as special accessories from specialist retailers or from the after-sales service.

  Before using the oven, remove any unnecessary accessories and ovenware from the cooking compartment.
- Always use oven gloves when taking hot accessories or ovenware out of the cooking compartment.

Cakes and pastries

Baking on one level

When baking cakes, the best results can be achieved using Top/bottom heating.

When baking with 3D hot air, use the following shelf heights for the accessory:

- Cakes in tins: level 2
- Cakes on trays: level 3

Baking on two or more levels

Use 3D hot air.

Baking on 2 levels

- Wire rack or universal pan at shelf position 3
- Wire rack at shelf position 1.

Baking on 3 levels:

- Wire rack at shelf position 5
- Universal pan at shelf position 3
- Wire rack at shelf position 1.

Baking trays that are placed in the oven at the same time will not necessarily be ready at the same time.

The tables show numerous suggestions for your dishes.

If you have 2 small, round cake tins, place them on one level next to each other on the wire rack.

If you have 4 small, round cake tins, place 2 next to each other on each wire rack. Slide in the wire racks one above the other.

If you are baking with 3 loaf tins at the same time, place these on the wire racks as indicated in the picture.

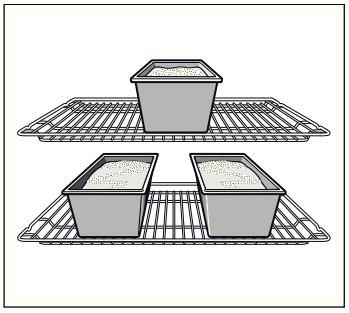

Baking tins

It is best to use dark-coloured metal baking tins.

Baking times are increased when light-coloured baking tins made of thin metal or glass dishes are used, and cakes do not brown so evenly.

If you wish to use silicone baking tins, use the information and recipes provided by the manufacturer as a guide. Silicone baking tins are often smaller than normal tins. The amount of mixture and recipe instructions may differ.

Tables

The tables show the ideal type of heating for the various cakes and pastries. The temperature and baking time depend on the amount and composition of the mixture. This is why temperature ranges are given in the tables. You should try the lower temperature first, since a lower temperature results in more even browning. You can increase the temperature next time if necessary.

Additional information can be found in the *Baking tips* section following the tables.

Note: Due to the high level of moisture when baking with HydroBake, condensation can form on the inside window of the oven. Open the oven door carefully, as hot steam will escape.

Types of heating:

- = 3D hot air
- = Top/bottom heating
- = HydroBaking
- = Intensive heat

Food	Dish	Shelf position	Type of heating	Temperature in °C	Time in minutes
Victoria sandwich	Wire rack + 2 x Ø 20 cm tins	2		170-180	20-25
	Wire rack + 2 x Ø 20 cm tins	3	*	160-180	20-25
Light fruit cake	Wire rack + high Ø 20 cm tin	2		160-170	80-90
	Wire rack + high Ø 20 cm tin	2	*	150-160	80-90
Rich fruit cake	Wire rack + Ø 23 cm high round tin or 20 cm square tin	2	*	130-140	180-190
Fruit crumble	Wire rack + flat glass dish	2		180-190	35-45
	Wire rack + flat glass dish	3	*	160-170	35-45
Sponge cake (fatless)	Wire rack + baking tin (dark coated)	2	*	170-180	30-35
	Wire rack + baking tin (dark coated)	2	*	160-170	35-40
Swiss roll	Universal pan + swiss roll tin	2	*	200-210	10-12
	Wire rack + swiss roll tin	3	*	180-190	10-12
Tart	Universal pan + Ø 20 cm plate or pie tin	2		190-200	50-60
	Wire rack + Ø 20 cm plate or pie tin	3	*	190-200	55-60
Quiche	Wire rack + quiche tin (dark coated)	2		190-200	45-50
	Wire rack + quiche tin (dark coated)	3	*	180-190	40-45
(White) Bread	Wire rack + loaf tin (1 x 900 g or 2 x 450 g)	1		230-240	25-35
	Wire rack + loaf tin (1 x 900 g or 2 x 450 g)	3	*	190-200	25-30
Scones	Universal pan	3		200-210	15-20
	Universal pan	3	*	180-190	15-20
Biscuits	Universal pan	3		170-180	10-15
	Universal pan	3	*	160-170	10-15
Small cakes	Wire rack + 12-cup tin	3	*	160-170	15-20
	Wire rack + 12-cup tin	3	*	150-160	15-20
Jam tarts	Wire rack + 12-cup tin	2		190-200	15-20
	Wire rack + 12-cup tin	2	*	180-190	15-20
Meringues	Universal pan	3	*	80-90	100-150
Pavlova	Universal pan	3	**	150** + 100	100-150
Soufflé	Wire rack + 1,2 l soufflé dish	2		170-180	40-50
	Wire rack + 1,2 l soufflé dish	2	*	160-170	40-50

* Preheat.

** Preheat at higher temperature, then reduce and insert food.

Food	Dish	Shelf position	Type of heating	Temperature in °C	Time in minutes
Pie	Wire rack + pie dish	2		190-200	45-55
	Wire rack + pie dish	3	*	180-190	45-50
Yorkshire pudding	Universal pan + 12-cup tin	2	*	210-220	20-25
	Universal pan + 12-cup tin	3	*	200-210	20-25
Jacket potatoes	Universal pan	3	*	160-170	60-70
Pizza (homemade)	Universal pan	2		190-200	25-30
	Universal pan	3	*	210-220	15-20

* Preheat.
** Preheat at higher temperature, then reduce and insert food.

Types of heating:

- = 3D hot air
- = Top/bottom heating
- = HydroBaking
- = Intensive heat

Food	Dish	Shelf position	Type of heating	Temperature in °C	Time in minutes
Victoria sandwich	Wire rack + 2 x Ø 20 cm tins	2		170-180	20-25
	Wire rack + 2 x Ø 20 cm tins	3	*	160-180	20-25
Light fruit cake	Wire rack + high Ø 20 cm tin	2		160-170	80-90
	Wire rack + high Ø 20 cm tin	2	*	150-160	80-90
Rich fruit cake	Wire rack + Ø 23 cm high round tin or 20 cm square tin	2	*	130-140	180-190
Fruit crumble	Wire rack + flat glass dish	2		180-190	35-45
	Wire rack + flat glass dish	3	*	160-170	35-45
Sponge cake (fatless)	Wire rack + baking tin (dark coated)	2	*	160-170	30-40
	Wire rack + baking tin (dark coated)	2	*	150-160	35-45
Swiss roll	Universal pan + swiss roll tin	2	*	200-210	10-12
	Wire rack + swiss roll tin	3	*	180-190	10-12
Tart	Universal pan + Ø 20 cm plate or pie tin	2		180-190	50-60
	Wire rack + Ø 20 cm plate or pie tin	3	*	190-200	55-60
Quiche	Wire rack + quiche tin (dark coated)	2		180-190	45-50
	Wire rack + quiche tin (dark coated)	3	*	180-190	40-45
(White) Bread	Wire rack + loaf tin (1 x 900 g or 2 x 450 g)	1		230-240	25-35
	Wire rack + loaf tin (1 x 900 g or 2 x 450 g)	3	*	190-200	25-30
Scones	Universal pan	3		200-210	15-20
	Universal pan	3	*	180-190	15-20
Biscuits	Universal pan	3		170-180	10-15
	Universal pan	3	*	160-170	10-15
Small cakes	Wire rack + 12-cup tin	3	*	160-170	15-20
	Wire rack + 12-cup tin	3	*	150-160	15-20
Jam tarts	Wire rack + 12-cup tin	2		190-200	15-20
	Wire rack + 12-cup tin	2	*	180-190	15-20
Meringues	Universal pan	3	*	80-90	100-150
Pavlova	Universal pan	3	**	150** + 100	100-150
Soufflé	Wire rack + 1,2 l soufflé dish	2		170-180	40-50
	Wire rack + 1,2 l soufflé dish	2	*	160-170	40-50
Pie	Wire rack + pie dish	2		190-200	45-55
	Wire rack + pie dish	3	*	180-190	45-50

* Preheat.
** Preheat at higher temperature, then reduce and insert food.

Food	Dish	Shelf position	Type of heating	Temperature in °C	Time in minutes
Yorkshire pudding	Universal pan + 12-cup tin	2	***	210-220	20-25
	Universal pan + 12-cup tin	3	***	200-210	20-25
Jacket potatoes	Universal pan	3	***	160-170	60-70
Pizza (homemade)	Universal pan	2		190-200	25-30
	Universal pan	3	***	210-220	15-20

* Preheat.

** Preheat at higher temperature, then reduce and insert food.

Baking tips

You wish to bake according to your own recipe.	Use similar items in the baking tables as a guide.
How to establish whether sponge cake is baked through.	Approximately 10 minutes before the end of the baking time specified in the recipe, stick a cocktail stick into the cake at the highest point. If the cocktail stick comes out clean, the cake is ready.
The cake collapses.	Use less fluid next time or set the oven temperature 10 degrees lower. Observe the specified mixing times in the recipe.
The cake has risen in the middle but is lower around the edge.	Do not grease the sides of the springform cake tin. After baking, loosen the cake carefully with a knife.
The cake goes too dark on top.	Place it lower in the oven, select a lower temperature and bake the cake for a little longer.
The cake is too dry.	When it is done, make small holes in the cake using a cocktail stick. Then drizzle fruit juice or an alcoholic beverage over it. Next time, select a temperature 10 degrees higher and reduce the baking time.
The bread or cake (e.g. cheesecake) looks good, but is soggy on the inside (sticky, streaked with water).	Use slightly less fluid next time and bake for slightly longer at a lower temperature. For cakes with a moist topping, bake the base first. Sprinkle it with almonds or bread crumbs and then place the topping on top. Please follow the recipe and baking times.
The cake is unevenly browned.	Select a slightly lower temperature to ensure that the cake is baked more evenly. Bake delicate pastries on one level using Top/bottom heating. Protruding greaseproof paper can affect the air circulation. For this reason, always cut greaseproof paper to fit the baking tray.
The bottom of a fruit cake is too light.	Place the cake one level lower the next time.
The fruit juice overflows.	Next time, use the deeper universal pan, if you have one.
Small baked items made out of yeast dough stick to one another when baking.	There should be a gap of approx. 2 cm around each item. This gives enough space for the baked items to expand well and turn brown on all sides.
You were baking on several levels. The items on the top baking tray are darker than that on the bottom baking tray.	Always use 3D hot air to bake on more than one level. Baking trays that are placed in the oven at the same time will not necessarily be ready at the same time.
Condensation forms when you bake moist cakes.	Baking may result in the formation of water vapour, which escapes above the door. The steam may settle and form water droplets on the control panel or on the fronts of adjacent units. This is a natural process.

Meat, poultry, fish

Ovenware

The universal pan with insert wire rack is suitable for large roasts. You may also use any heat-resistant ovenware.

Glass ovenware is the most suitable. Ensure that the lid of the roasting dish fits well and closes properly.

Add a little more liquid when using enamelled roasting dishes.

With roasting dishes made of stainless steel, browning is not so intense and the meat may be somewhat less well cooked. Increase the cooking times.

Always place the ovenware in the centre of the wire rack.

Place hot glass ovenware on a dry mat after cooking. The glass could crack if placed on a cold or wet surface.

Roasting

The information in the table applies to food placed in a cold oven and for meat taken directly from the refrigerator.

The joints of meat should weigh between 500 g and 2 kg.

Ensure that you always use the lower temperature, if the weight of the joint you wish to roast is high.

If there are several pieces of meat, calculate the roasting time using the weight of the heaviest piece of meat. The individual pieces of meat should be approximately the same size.

Meat

When using the Top/bottom heating and Circulated air grilling types of heating, turn the pieces of meat halfway through the cooking time.

When the roast is ready, turn off the oven and allow it to rest for 10 minutes. This allows better distribution of the meat juices.

When roasting joints of pork with a rind, make cuts in the rind crossways and if it is to be turned, first place the joint with the rind side down in the dish.

Type of heating:

■ = 3D hot air

Food	Dish	Shelf position	Type of heating	Temperature in °C	Time, min. per 500 g + add. time
Beef					
Slow roast joint	Universal pan with wire insert	1		130-140	40 + 40
Top side, top rump	Universal pan with wire insert	1		160-170	30 + 25
Lamb					
Leg	Universal pan with wire insert	1		160-170	30 + 25
Shoulder (bone in)	Universal pan with wire insert	1		160-170	25 + 20
Shoulder (boned and rolled)	Universal pan with wire insert	1		170-180	25 + 25
Rack of lamb	Universal pan with wire insert	1		180-190	25 + 25
Pork					
Roast joint	Universal pan with wire insert	1		180-190	35 + 35
Loin joint	Universal pan with wire insert	1		170-180	30 + 30
Belly	Universal pan with wire insert	1		160-170	30 + 25
Gammon joint	Universal pan with wire insert	1		160-170	30 + 30
Poultry					
Chicken	Universal pan with wire insert	1		170-180	25 + 25
Chicken, portion (200-250 g each)	Universal pan with wire insert	1		190-200	20 + 25
Chicken, quarter (450 g each)	Universal pan with wire insert	1		180-190	20 + 25
Duck	Universal pan with wire insert	1		180-190	20 + 20
Turkey, crown	Universal pan with wire insert	1		160-170	15 + 15
Turkey, whole (up to 12 kg)	Universal pan with wire insert	1		160-170	12 + 12
Casserole					
Diced meat (beef, pork, lamb)	Wire rack + glass roasting dish with lid	2		140	120-150 (total time)
Braising steaks	Wire rack + glass roasting dish with lid	2		140	120-150 (total time)
Chicken	Wire rack + glass roasting dish with lid	2		140	60-90
Complete meal					
With beef	Wire rack + universal pan with wire insert	4+1		160, then 200 (yorkshire pudding)	weight of meat (see table above) + 15-25 for yorkshire pudding
With chicken	Wire rack + universal pan with wire insert	4+1		180	weight of chicken (see table above)

Types of heating:

■ = Top/bottom heating

■ = Hot air grilling

Food	Dish	Shelf position	Type of heating	Temperature in °C	Time, min. per 500 g + add. time
Beef					
Top side, top rump	Universal pan with wire insert	2		200-220	25 + 20
Lamb					
Leg	Universal pan with wire insert	1		160-180	30 + 30
Rack of lamb	Universal pan with wire insert	1		190-200	25 + 20

Food	Dish	Shelf position	Type of heating	Temperature in °C	Time, min. per 500 g + add. time
Pork					
Roast joint	Universal pan with wire insert	1		180-200	35 + 40
Loin joint	Universal pan with wire insert	2		190-210	30-45
Belly	Universal pan with wire insert	1		220-240	25 + 40
Poultry					
Chicken	Universal pan with wire insert	1		200-220	25 + 15
Chicken, portion (200-250 g each)	Universal pan with wire insert	3		210-230	25 + 25
Chicken, quarter (450 g each)	Universal pan with wire insert	2		220-240	20 + 25
Duck	Universal pan with wire insert	1		190-210	20 + 20

Grilling

When grilling, preheat the oven for approx. 3 minutes, before putting the food in.

Always grill with the oven door closed.

As far as possible, the pieces of food you are grilling should be of equal thickness. This will allow them to brown evenly and remain succulent and juicy.

Turn grilled items after the specified time.

Whole fish does not need to be turned. Place the whole fish in the oven in the swimming position with the dorsal fin pointing upwards. Placing a scored potato or a small oven-proof container in the stomach cavity of the fish will provide stability.

Do not add salt to steaks until they have been grilled.

Place the food to be grilled directly on the wire rack. If you are grilling a single piece, the best results are achieved by placing it in the centre of the wire rack.

The universal pan should also be inserted underneath. To prevent a high degree of smoke from forming, do not insert the pan higher than level 3. The meat juices are collected in the pan and the oven is kept cleaner.

Do not insert the baking tray or universal pan at level 4 or 5. The high heat distorts it and the cooking compartment can be damaged when removing it.

The grill element switches on and off continually. This is normal. The grill setting determines how frequently this will happen.

Type of heating:

- = Grill, large area

Food	Dish	Shelf position	Type of heating	Grill setting	Time in minutes
Beef					
Steaks, height 2-3 cm	Wire rack + universal pan	5+3		3	1. side 4-5, 2. side 4-5
Burgers, height 1-2 cm	Wire rack + universal pan	5+3		3	1. side 6-8, 2. side 4-6
Lamb					
Steaks, height 2-3 cm	Wire rack + universal pan	5+3		3	1. side 6-7, 2. side 6-7
Chops, height 2-3 cm	Wire rack + universal pan	5+3		3	1. side 5-6, 2. side 5-6
Pork					
Steaks, height 1-2 cm	Wire rack + universal pan	5+3		3	1. side 6-7, 2. side 6-7
Chops, height 2-3 cm	Wire rack + universal pan	4+3		3	1. side 10-12, 2. side 9-10
Burgers, height 1-2 cm	Wire rack + universal pan	5+3		3	1. side 6-8, 2. side 4-6
Sausages, thickness 2-4 cm	Wire rack + universal pan	4+3		3	10-15, turn occasionally
Gammon					
Steaks, height 1-3 cm	Wire rack + universal pan	5+3		3	1. side 4, 2. side 3
Chicken					
Drumsticks, 150 g each	Wire rack + universal pan	3+2		3	1. side 17, 2. side 8
Breast (boneless), 150 g each	Wire rack + universal pan	3+2		3	1. side 20, 2. side 10

Food	Dish	Shelf position	Type of heating	Grill setting	Time in minutes
Fish					
Whole trout, 300 g each	Wire rack + universal pan	2+1		2	20-25
Fillets, 150 g each	Wire rack + universal pan	4+3		3	1. side 5-7, 2. side 5-7

Tips for roasting and grilling

The table does not contain information for the weight of the joint.	Select the next lowest weight from the instructions and extend the time.
How to tell when the roast is ready.	Use a meat thermometer (available from specialist shops) or carry out a “spoon test”. Press down on the roast with a spoon. If it feels firm, it is ready. If the spoon can be pressed in, it needs to be cooked for a little longer.
The roast is too dark and the crackling is partly burnt.	Check the shelf height and temperature.
The roast looks good but the juices are burnt.	Next time, use a smaller roasting dish or add more liquid.
The roast looks good but the juices are too clear and watery.	Next time, use a larger roasting dish and use less liquid.
Steam rises from the roast when basted.	This is normal and due to the laws of physics. The majority of the steam escapes through the steam outlet. It may settle and form condensation on the cooler switch panel or on the fronts of adjacent units.

Slow cooking

Slow cooking, also known as low-temperature cooking, is the ideal cooking method for tender pieces of meat that are to be cooked medium rare or à point. Meat remains very succulent and tender.

The benefit of this cooking method is that it allows lots of scope for menu planning because slow-cooked meat is easy to keep warm.

Notes

- Only use fresh, good-quality meat. Carefully remove sinews and fat from around the edge. Fat develops a strong, distinct taste during slow cooking.
- Larger pieces of meat do not need to be turned.
- Meat can be carved immediately following slow cooking. No standing time is required.
- Due to the special cooking method, the meat looks pink, i.e. medium rare. This does not mean, however, that it is raw or not well done enough.
- If you want to make gravy, cook the meat in ovenware with a lid. Please note that the cooking times will be reduced.
- In order to check whether the meat is cooked, use a meat thermometer. A core temperature of 60 °C should be maintained for at least 30 minutes.

Suitable ovenware

Use shallow ovenware, e.g. a porcelain serving plate or an glass roasting dish without the lid.

Always place the uncovered ovenware on the wire rack at level 2.

Making settings

1. Select the Slow cook heating type and set a temperature between 70 and 90 °C.

   Preheat the oven, placing the ovenware inside it to warm.
2. Rapidly heat a little fat in a pan. Sear the meat on all sides, even on the ends, and place immediately in the preheated ovenware.
3. Put the ovenware containing the meat back in the oven and slow cook. A slow-cook temperature of 80 °C is ideal for most pieces of meat.

Table

All tender joints of poultry, beef, veal, pork and lamb are suitable for slow cooking. The slow cooking times depend on the thickness and the core temperature of the meat.

Dish	Weight	Level	Type of heating	Temperature in °C	Searing time in minutes	Slow cooking time in hours
Poultry						
Turkey breast	1000 g	2		80	6-7	4-5
Duck breast*	300-400 g	2		80	3-5	2-2½
Beef						
Joint of beef (e.g. rump) 6-7 cm thick	approx. 1.5 kg	2		80	6-7	4½-5½
Tenderloin, whole	approx. 1.5 kg	2		80	6-7	5-6
Sirloin, 5-6 cm thick	approx. 1.5 kg	2		80	6-7	4-5
Steak-cut rump, 3 cm thick		2		80	5-7	80-110 Min.

* For crispy skin, briefly fry the duck breast in a frying pan after slow cooking.

Dish	Weight	Level	Type of heating	Temperature in °C	Searing time in minutes	Slow cooking time in hours
Veal						
Joint of veal (e.g. topside), 6-7 cm thick	approx. 1.5 kg	2		80	6-7	5-6
Fillet of veal	approx. 800 g	2		80	6-7	3-3½
Pork						
Pork joint, lean (e.g. loin), 5-6 cm thick	approx. 1.5 kg	2		80	6-7	5-6
Fillet of pork, whole	approx. 500 g	2		80	6-7	2½-3
Lamb						
Lamb saddle fillet, whole	approx. 200 g	2		80	5-6	1½-2

* For crispy skin, briefly fry the duck breast in a frying pan after slow cooking.

Tips for slow cooking

Slow-cooked meat is not as hot as conventionally roasted meat.	So that the roasted meat does not cool so quickly, warm the plates and serve the gravy very hot.
If you wish to keep slow-cooked meat warm.	After slow cooking, turn the temperature down to 70 °C. Small pieces of meat can be kept warm for up to 45 minutes, larger pieces for up to 2 hours.

Preprepared products

Observe the instructions on the packaging.

If you line the accessories with greaseproof paper, make sure that the paper is suitable for these temperatures. Make sure the paper is a suitable size for the dish to be cooked.

The cooking result greatly depends on the quality of the food. Pre-browning and unevenness can sometimes even be found on the raw product.

Leave a little space between bread rolls when crisping them up. Do not place too many bread rolls on the accessories.

Sprinkle grated cheese over the top of your lasagne to give it a beautiful and evenly browned finish.

Types of heating:

- = 3D hot air
- = HydroBaking
- / = Pizza setting

Food	Dish	Shelf position	Type of heating	Temperature in °C	Time in minutes
Pizza, frozen					
Pizza with a thin base	Universal pan	2	/	200-220	15-20
	Universal pan	3	*	210-220	10-15
	Universal pan + wire rack	3+1	*	170-180	20-25
Pizza with a thick base	Universal pan	2	/	170-190	20-30
	Universal pan	3	*	200-210	15-20
	Universal pan + wire rack	3+1	*	170-180	20-25
Pizza-Baguette	Universal pan	3	/	170-190	20-30
	Universal pan	3	*	170-180	25-30
Pizza, chilled					
Pizza	Universal pan	1	*/*	180-200	10-15
	Universal pan	3	*	200-210	10-15
Potato products, frozen					
Chips	Universal pan	3	/	190-210	20-30
	Universal pan	3	*	210-220	20-25
	Universal pan + baking tray	3+1	*	180-190	35-40
Duchess potatoes	Universal pan	3	/	190-210	20-25
	Universal pan	3	*	200-210	15-20
Hash browns (fried potatoes)	Universal pan	3	/	200-220	15-25
	Universal pan	3	*	200-210	15-20

* Preheat.

Food	Dish	Shelf position	Type of heating	Temperature in °C	Time in minutes
Potato wedges	Universal pan	2	/	190-200	20-25
	Universal pan	3	*	190-200	20-25
Baked goods, frozen					
Rolls, baguettes	Universal pan	3	/	180-200	10-20
	Universal pan	3	*	180-190	10-15
Baked goods, prebaked					
Part baked white bread	Universal pan	3		190-210	10-20
	Universal pan	3	*	180-190	15-20
	Universal pan + wire rack	3+1	*	160-180	20-25
Fried foods, frozen					
Fish fingers	Universal pan	2	/	220-240	10-20
	Universal pan	3	*	210-220	15-20
Chicken nuggets	Universal pan	3	/	200-220	15-25
	Universal pan	3	*	180-190	20-25
Lasagne, frozen					
Lasagne, 400 g	Wire rack	2	/	180-190	30-35
	Wire rack	2	*	180-190	35-40
Lasagne, 1200 g	Wire rack	2	/	180-190	45-50
	Wire rack	2	*	180-190	45-50
Lasagne, chilled					
Lasagne, 400 g	Wire rack	2	*	180-190	20-25
Lasagne, 1200 g	Wire rack	2	*	170-180	30-35

* Preheat.

Special dishes

At low temperatures, 3D hot air is equally useful for producing creamy yoghurt as it is for proving light yeast dough.

First, remove accessories, hook-in racks or telescopic shelves from the cooking compartment.

Preparing yoghurt

1. Bring 1 litre of milk (3.5 % fat) to the boil and cool down to 40 °C.
2. Stir in 150 g of yoghurt (at refrigerator temperature).
3. Pour into cups or small screw-top jars and cover with cling film.
4. Preheat the cooking compartment as indicated.
5. Place the cups or jars on the cooking compartment floor and incubate as indicated.

Proving dough

1. Prepare the dough as usual, place it in a heat-resistant ceramic dish and cover.
2. Preheat the cooking compartment as indicated.
3. Switch off the oven and place the dough in the cooking compartment and leave it to prove.

Dish	Ovenware		Type of heating	Temperature	Cooking time
Yoghurt	Cups or screw-top jars	on the cooking compartment floor		50 °C Preheat 50 °C	5 mins 8 hrs
Proving dough	Heat-resistant dish	on the cooking compartment floor		50 °C Preheat Switch off the appliance and place the yeast dough in the cooking compartment	5-10 mins 20-30 mins

Defrost

This Defrost setting is most ideal for frozen goods.

The defrosting time will depend on the type and quantity of the food.

Observe the instructions on the packaging.

Take frozen food out of its packaging and place in suitable ovenware on the wire rack.

Place poultry on a plate with the breast side facing down.

Note: The oven light does not come on at temperatures of less than 60 °C. This enables precise temperature regulation.

Dish	Accessories	Level	Type of heating	Temperature
Delicate frozen foods e.g. cream gateaux, buttercream cakes, gateaux with chocolate or sugar-based icing, fruit, etc.	wire rack	1	❄	30 °C
Other frozen products Chicken, sausage and meat, bread and bread rolls, cake and other baked goods	wire rack	1	❄	50 °C

Drying

With 3D hot air, you can dry foods brilliantly.

Use unblemished fruit and vegetables only and wash them thoroughly.

Drain off the excess water, then dry them.

Line the universal pan and the wire rack with greaseproof or parchment paper.

Turn very juicy fruit or vegetables several times.

Remove fruit and vegetables from the paper as soon as they have dried.

Fruit and herbs	Accessories	Level	Type of heating	Temperature	Cooking time
600 g apple rings	Universal pan + rack	3+1		80 °C	5 hrs (approx.)
800 g pear slices	Universal pan + rack	3+1		80 °C	8 hrs (approx.)
1.5 kg damsons or plums	Universal pan + rack	3+1		80 °C	8-10 hrs (approx.)
200 g herbs, washed	Universal pan + rack	3+1		80 °C	1½ hrs (approx.)

Preserving

For preserving, the jars and rubber seals must be clean and intact. If possible, use jars of the same size. The information in the table is for round, one-litre jars.

Caution!

Do not use jars that are larger or taller than this. The lids could crack.

Only use fruit and vegetables in good condition. Wash them thoroughly.

The times given in the tables are a guide only. The time will depend on the room temperature, number of jars, and the quantity and temperature of the contents. Before you switch off the appliance or change the cooking mode, check whether the contents of the jars are bubbling as they should.

Preparation

1. Fill the jars, but not to the top.
2. Wipe the rims of the jars, as they must be clean.
3. Place a damp rubber seal and a lid on each jar.
4. Seal the jars with the clips.

Place no more than six jars in the cooking compartment.

Making settings

1. Insert the universal pan at level 2. Arrange the jars on it so that they do not touch each other.
2. Pour ½ litre of hot water (approx. 80 °C) into the universal pan.
3. Close the oven door.
4. Set Bottom heating.
5. Set the temperature to between 170 and 180 °C.
6. Start operation.

Preserving

Fruit

After approx. 40 to 50 minutes, small bubbles begin to form at short intervals. Switch off the oven.

After 25 to 35 minutes of residual heat, remove the preserving jars from the cooking compartment. If they are allowed to cool for longer in the cooking compartment, germs could multiply, promoting acidification of the preserved fruit.

Fruit in one-litre jars	When it starts to bubble	Residual heat
Apples, redcurrants, strawberries	Switch off	approx. 25 minutes
Cherries, apricots, peaches, gooseberries	Switch off	approx. 30 minutes
Apple purée, pears, plums	Switch off	approx. 35 minutes

Vegetables

As soon as bubbles begin to form in the jars, set the temperature back to between 120 and 140 °C. Depending on the type of vegetable, heat for approx. 35 to 70 minutes. Switch off the oven after this time and use the residual heat.

Vegetables with cold cooking water in one-litre jars	When it starts to bubble	Residual heat
Gherkins	-	approx. 35 minutes
Beetroot	approx. 35 minutes	approx. 30 minutes
Brussels sprouts	approx. 45 minutes	approx. 30 minutes
Beans, kohlrabi, red cabbage	approx. 60 minutes	approx. 30 minutes
Peas	approx. 70 minutes	approx. 30 minutes

Taking out the jars

After preserving, remove the jars from the cooking compartment.

Caution!

Do not place the hot jars on a cold or wet surface. They could suddenly burst.

Acrylamide in foodstuffs

Acrylamide is mainly produced in grain and potato products prepared at high temperatures, such as potato crisps, chips, toast, bread rolls, bread or fine baked goods (biscuits, gingerbread, cookies).

Tips for keeping acrylamide to a minimum when preparing food	
General	■ Keep cooking times to a minimum. ■ Cook meals until they are golden brown, but not too dark. ■ Large, thick pieces of food contain less acrylamide.
Baking	With top/bottom heating max. 200 °C. With 3D hot air or hot air max.180 °C.
Biscuits	With top/bottom heating max. 190 °C. With 3D hot air or hot air max. 170 °C. Egg or egg yolk reduces the production of acrylamide.
Oven chips	Spread evenly over the baking tray, in a single layer. Bake at least 400 g per baking tray so that the chips do not dry out

Test dishes

These tables have been produced for test institutes to facilitate the inspection and testing of the various appliances.

In accordance with EN 50304/EN 60350 (2009) and IEC 60350.

Baking

Baking on 2 levels:
Always insert the universal pan above the baking tray.
Baking on 3 levels:
Insert the universal pan in the middle.

Viennese whirls:
Baking trays that are placed in the oven at the same time will not necessarily be ready at the same time.

Apple pie on 1 level:
Place dark springform cake tins next to each other diagonally on the same level.
Apple pie on 2 levels:
Place dark springform cake tins next to each other (see illustration).

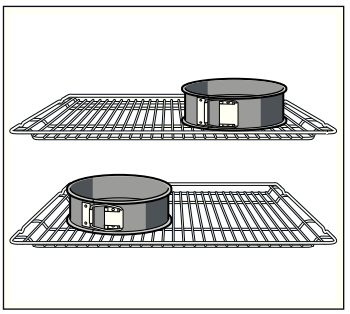

Cakes in tinplate springform cake tins:
Bake on 1 level with Top/bottom heating Place the springform cake tin on the universal pan instead of on the wire rack.

Types of heating

- = 3D hot air
- / = Hot air eco
- = Top/bottom heating
- = HydroBaking
- = Intensive heat

Dish	Accessories and tins	Level	Type of heating	Temperature in °C	Cooking time in minutes
Whirls (preheat*)	Baking tray	3		140-150	30-40
	Universal pan + baking tray	3+1		140-150	30-45
	2 baking trays + universal pan	5+3+1		130-140	35-50
Whirls	Baking tray	3	/	140-150	30-45
Small cakes (preheat*)	Baking tray	3		150-170	20-30
	Baking tray	3		150-160	20-30
	Universal pan + baking tray	3+1		140-160	25-40
	2 baking trays + universal pan	5+3+1		130-150	25-40
Hot water sponge cake (preheat*)	Springform cake tin on the wire rack	2		160-170	30-40

* Do not use rapid heating to preheat the appliance.

Dish	Accessories and tins	Level	Type of heating	Temperature in °C	Cooking time in minutes
Hot water sponge cake	Springform cake tin on the wire rack	2	/ eco	160-180	30-40
German apple pie	Wire rack+ 2 springform cake tins, dia. 20 cm	2		170-190	80-90
	2 wire racks + 2 spring-form cake tins, dia. 20 cm	3+1		170-190	70-90

* Do not use rapid heating to preheat the appliance.

Grilling

If you are grilling food directly on the wire rack, the universal pan should also be inserted at level 1. The liquid is then collected, keeping the oven cleaner.

Type of heating:

- = Grill, large area

Dish	Accessories	Level	Type of heating	Grill setting	Cooking time in minutes
Toast Preheat for 10 minutes	wire rack	5		3	½-2
Beefburgers, 12 pieces* do not preheat	wire rack + universal pan	4+1		3	25-30

* turn over after ⅔ of the cooking time.

Robert Bosch Hausgeräte GmbH
Carl-Wery-Straße 34
81739 München
Germany
www.bosch-home.com

9000644282

911025