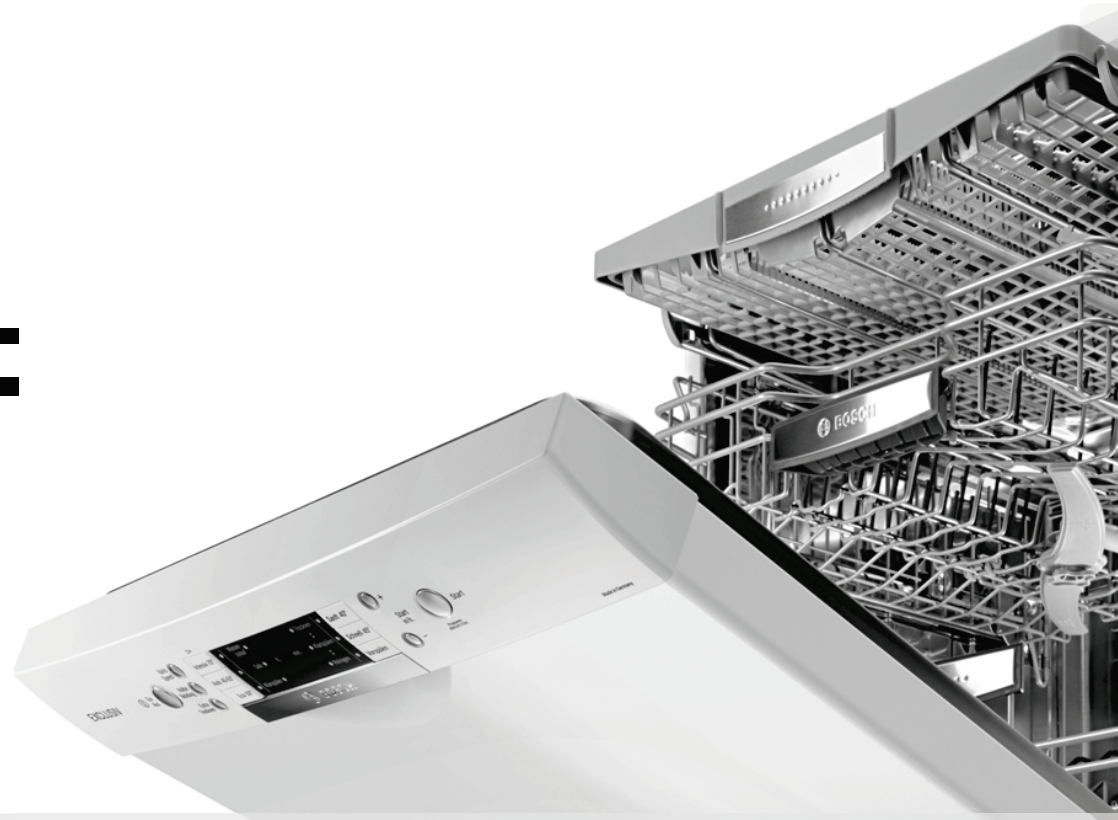

Dishwasher

BOSCH

en Operating instructions

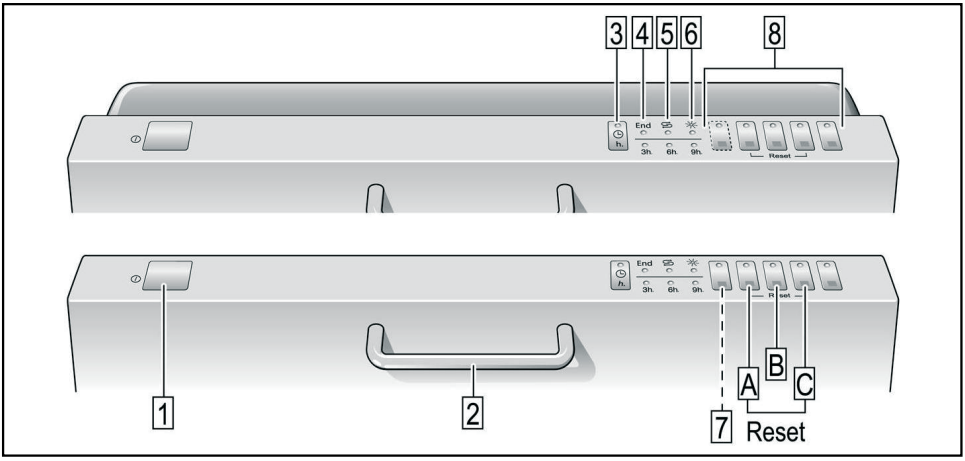
3
4
5
6
8
End
3h.
6h.
9h.
Reset
1
2
7
A
B
C
Reset

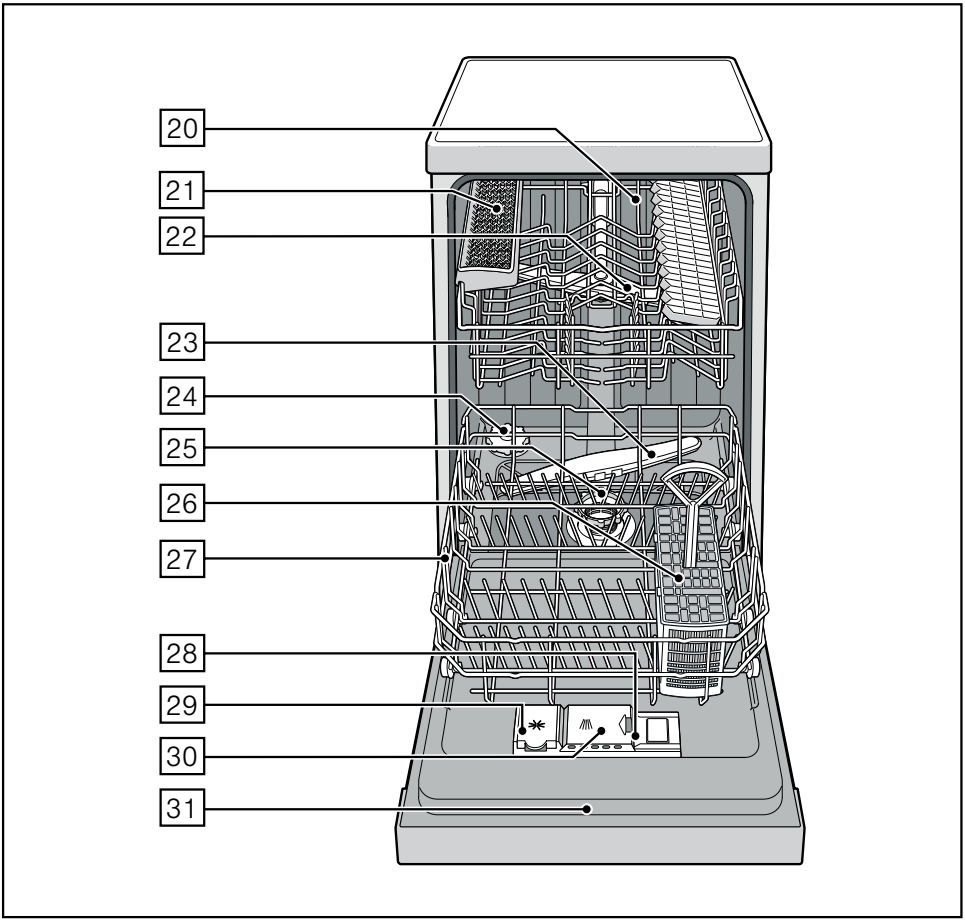
20
21
22
23
24
25
26
27
28
29
30
31

en Table of contents

Safety instructions 4
Before you switch ON the appliance . . 4
Delivery 4
Installation 4
In daily use 4
Children in the household 5
Door lock 5
Damage 5
Disposal 5
Getting to know your appliance 5
Control panel 5
Appliance interior 5
Water softening system 6
Setting 6
Water hardness table 6
Special salt 7
Using special salt 7
Detergents with salt component 7
Switching off water softening system . 7
Rinse aid 8
Setting amount of rinse aid 8
Switching the rinse aid refill indicator off or on 8
Utensils 9
Not suitable 9
Glass and utensil damage 9
Loading the dishwasher 9
Unloading the dishwasher 9
Cups and glasses 9
Pans 9
Cutlery basket 10
Knife shelf 10
Folding spikes 10
Small accessories holder 10
Adjusting the height of the basket . . 10
Detergent 11
Adding detergent 12
Combination detergent 12
Overview of programmes 13
Programme selection 13
Information for test institutes 13
Additional options 14
Express Wash/ Speed Perfect 14
Half load 14
Washing the dishes 14
Programme data 14
Switching on the appliance 14
Timer programming 14
End of programme 15
Switching off the appliance 15
Interrupting the programme 15
Terminating the programme 15
Changing the programme 15
Maintenance and care 16
Overall condition of the machine 16
Special salt and rinse aid 16
Filters 16
Spray arms 17
Troubleshooting 17
Waste water pump 18
... when the appliance is switched on 18
... on the appliance 19
... during the wash cycle 19
... on the utensils 19
Customer service 20
Installation 21
Safety instructions 21
Delivery 21
Technical specifications 21
Installation 22
Waste-water connection 22
Fresh water connection 22
Electrical connection 22
Removing the appliance 23
Transportation 23
Protection against frost (Emptying the appliance) 23
Waste disposal 23
Packaging 23
Old appliances 23

Safety instructions

Before you switch ON the appliance

Please read the operating and installation instructions carefully. They contain important information on how to install, use and maintain the appliance.

Retain all documents for subsequent use or for the next owner.

Delivery

- Check the packaging and dishwasher immediately for damage caused in transit. Do not switch on a damaged appliance, but contact your supplier.
- Please dispose of the packaging material in an environmentally friendly manner.
- Do not let children play with packaging and its parts. There is a risk of suffocation from collapsible boxes and film.

Installation

Read the “Installation” chapter to learn how to install and connect the appliance correctly.

In daily use

- Use the dishwasher only in the household and only for its designed purpose: for washing domestic dishes.
- Children or people whose physical, sensory or mental abilities prevent them from using the appliance safely must not use this appliance without supervision or instruction by a responsible person.
- Do not lean or sit on the open door. The appliance could tip.
- Please note that free-standing appliances may tip over if the baskets are overloaded.
- Do not add any solvents to the washing chamber. Danger of explosion!
- Open the door carefully when the programme is still running. There is a risk of hot water spraying out of the appliance.
- To prevent injuries, e. g. caused by stumbling, open the dishwasher only briefly in order to load and unload the dishwasher.
- Read and observe the safety information and instructions for use on the packaging for cleaning and rinsing agents.

⚠ Warning

Knives and other utensils with sharp points must be placed in the cutlery basket with the points downwards or horizontally on the knife shelf *.

* depending on model

Children in the household

- If fitted, use the childproof lock. An exact description can be found in the back of the envelope.
- Do not allow children to play with or operate the appliance.
- Keep children away from detergents and rinse aid. These may cause chemical burns in the mouth, throat and eyes or asphyxiation.
- Keep children away from open dishwasher. The water in the rinsing compartment is not drinking water and could contain detergent residue.

Childproof lock (door lock) *

The description of the childproof lock is at the back in the envelope.

* depending on model

Damage

- The appliance may be repaired and opened up by a technician only. To do this, disconnect the appliance from the power supply. Pull out the mains plug or switch off the fuse. Turn off the tap.

Disposal

- Make redundant appliances unusable to prevent subsequent accidents.
- Dispose of the appliance in an environmentally friendly manner.

⚠ Warning

Children could become locked in the appliance (risk of suffocation) or find themselves in other dangerous situations.

Therefore: Pull out the mains plug, sever and dispose of the power cord. Destroy the door lock so that the door can no longer be closed.

Getting to know your appliance

Diagrams of the control panel and the interior of the appliance can be found in the envelope at the front.

Individual positions are referred to in the text.

Control panel

1 Main switch
2 Door opener
3 Timer programming
4 Programme end display
5 Salt refill indicator
6 Rinse aid refill indicator
7 Additional options **
8 Programme buttons **

* depending on model
** Number depending on model

Appliance interior

20 Top basket
21 Knife shelf *
22 Top spray arm
23 Bottom spray arm
24 Dispenser for special salt
25 Filters
26 Cutlery basket
27 Bottom basket
28 Lock for detergent dispenser
29 Dispenser for rinse aid
30 Detergent dispenser
31 Rating plate

* depending on model

Water softening system

To ensure good washing results, the dishwasher requires soft water, i.e. containing low amounts of lime, otherwise white limescale will be deposited on the utensils and inner container.

Tap water above 9° Clarke must be softened. The water is softened with salt (regeneration salt) in the water softening system of the dishwasher.

The setting and therefore the required amount of salt depends on the degree of hardness of your tap water (see table).

Setting

The amount of salt dispensed can be set in 4 stages
depending on the hardness of your water. Accordingly 0, 1, 2 or 3 displays are lit (see table).

– Find out about the hardness value of your tap water. Your water utility company will help you with this.
– Setting can be found in the water hardness table.
– Open the door.
– Hold down the programme button B and switch on the main switch 1, then release both buttons.
  The display 5 flashes
  and the buttons A and B light up.
  (Hardness value has been set to 2 at the factory.)

To change the setting:

– Press programme button B.
  Each time the button is pressed, the value increases by one setting.
  You can select a set value between 0 and 3 according
  to the hardness of your water.
  When the buttons A, B and C light up, the maximum hardness value has been reached. When the button is pressed again, the lamps go out and the set hardness value is set to 0.
– Switch off the main switch 1.
  The chosen setting has now been stored.
– Close the door.

Water hardness table

Water hardness value °Clarke	Hardness range	mmol/l	Setting	A	B	C
				Reset		
0 - 8	soft	0 -1,1	0	○	○	○
8 -20	medium	1,2-2,9	1	●	○	○
21-26	hard	3,0-3,7	2	●	●	○
27-44	hard	3,8-6,2	3	●	●	●

Special salt

Using special salt

Always refill with special salt immediately before switching on the appliance. This ensures that overrun special salt solution is immediately washed out and does not corrode the rinsing tank.

– Open the screw-type cap of the compartment 24.
– Fill the tank with water (only required when switching on the appliance for the first time).
– Then add salt **(not table salt)**.
  The water is displaced and runs out.

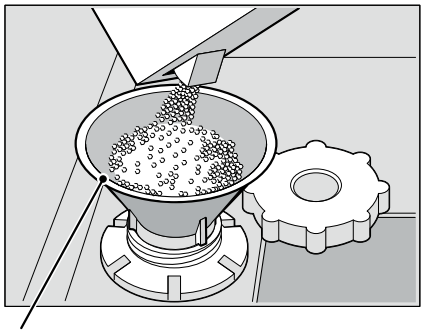

* depending on model

The salt refill indicator 5 on the fascia is lit. It goes out as soon as a sufficiently high salt solution has formed.

If the set hardness value is “0”, do not add salt because no salt is used during operation; the salt refill indicator is switched off. If the set values 1 to 3 are displayed, salt must be added.

Using detergents with salt component

If combined detergents with a salt component are used, salt can usually be omitted up to a water hardness of 21° dH (37° fH, 26° Clarke, 3.7 mmol/l). If the water hardness is over 21° dH, special salt must be used.

Salt refill indicator

As soon as the salt refill indicator 5 on the fascia is lit, top up the salt.

Depending on the washing frequency and the hardness setting, the regeneration salt may not have to be topped up for several months.

⚠ Warnings

– Never fill the salt dispenser with detergent. You will destroy the water softening system.
– To prevent corrosion, always refill with salt immediately before switching on the appliance.

Rinse aid ✳

As soon as the rinse-aid refill indicator 6 is lit on the fascia, there is still a rinse-aid reserve of 1–2 rinsing processes. Refill with rinse aid.

The rinse aid is required for stain-free utensils and clear glasses. Use only rinse aid for domestic dishwashers.

Combined detergents with rinse-aid component may be used up to a water hardness of 21° dH (37° fH, 26° Clarke, 3.7 mmol/l) only. If the water hardness is over 21° dH, rinse aid must be used.

– Open the cover on the rinse-aid dispenser 29. To do this, press the mark (1) on the cover and simultaneously lift the cover on the control plate (2).

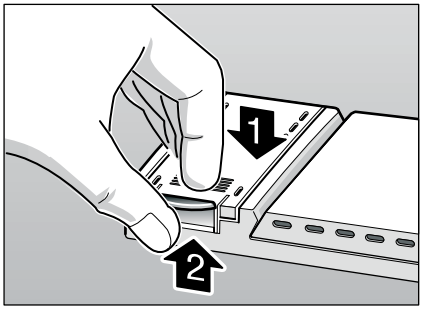

– Carefully pour in the rinse aid to just below the edge of the filler opening.

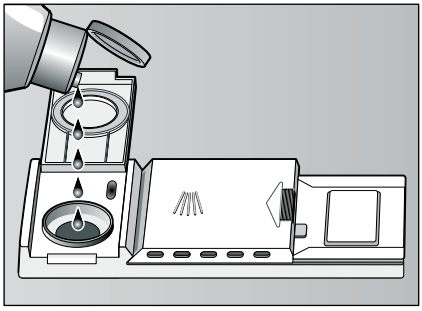

– Close cover until it clicks shut.
– To prevent excessive foam formation during the next rinse cycle, remove any rinse aid which has run over with a cloth.

Setting amount of rinse aid

The rinse aid dispensing rate can be adjusted steplessly. The clear rinse controller was set to 4 at the factory.

Do not change the position of the rinse aid control unless there are streaks (rotate towards –) or water stains (rotate towards +) on the utensils.

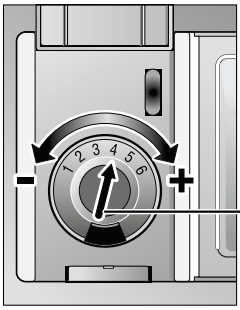

Switching the rinse aid refill indicator off or on

If the rinse-aid refill indicator 6 is impaired (e.g. when using combined detergents containing rinse aid component), it can be switched off.

To change the setting:

– Hold down the timer programming button 3 and press main switch 1 until the display is lit.
– Release buttons.
– By pressing the timer programming button 3, you can switch the rinse-aid indicator off or on.
– Switch off the main switch 1; the chosen setting has now been stored.

Utensils

Not suitable

- Cutlery and utensils made of wood.
- Delicate decorative glasses, craft and antique utensils. These decors are not dishwasher-proof.
- Plastic parts not resistant to heat.
- Copper and tin utensils.
- Utensils which are soiled with ash, wax, lubricating grease or ink.

Aluminium and silver parts have a tendency to discolour and fade during the wash cycle. Even some types of glass (e.g. crystal glass objects) may turn cloudy after many wash cycles.

Glass and utensil damage

Causes:

- Glass type and glass production process.
- Chemical composition of the detergent.
- Water temperature of the wash programme.

Recommendation:

- Use only glasses and porcelain which the manufacturer designates as dishwasher-proof.
- Use a detergent which protects utensils.
- Take glass and cutlery out of the dishwasher as soon as possible after the programme ends.

Loading the dishwasher

- Remove large food remnants. It is not necessary to prerinse utensils under running water.
- Place the utensils so that
  - they are secure and cannot tip over.
  - all utensils with their openings face down.
  - parts with curves or indentations are at an angle, thereby allowing water to drain.
  - does not obstruct rotation of the two spray arms 22 and 23.

Very small utensils should not be washed in the machine, as they may fall out of the baskets.

Unloading the dishwasher

To prevent water from dripping off the upper basket onto the utensils in the lower basket, it is recommended to empty the appliance from the bottom up.

Hot utensils are sensitive to shock! Therefore, when the programme ends, leave the utensils to cool down in the dishwasher until they can be handled.

Cups and glasses

Top basket 20

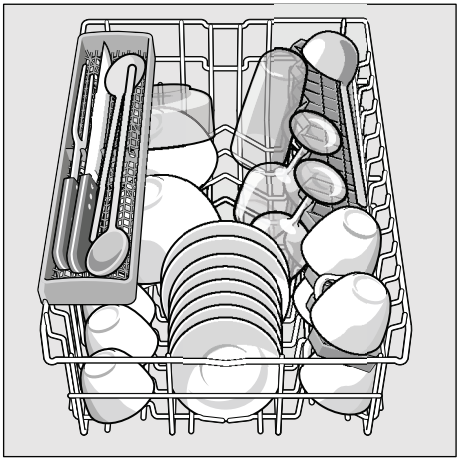

Pans

Bottom basket 27

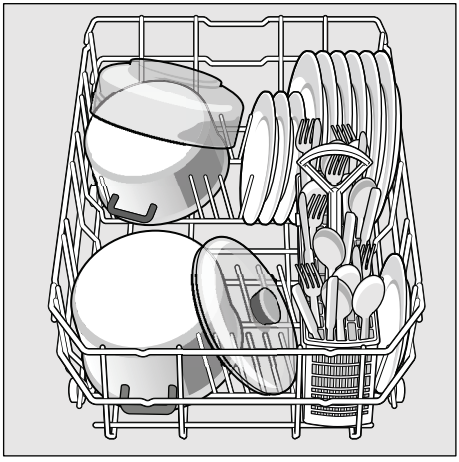

Tip

Heavily soiled utensils (pans) should be placed in the bottom basket. The more powerful spray jet provides a better dishwashing result.

Cutlery basket

You should always place cutlery unsorted with the points downwards.

To prevent injuries, place long, pointed implements and knives on the knife shelf.

Knife shelf *

* depending on model

Long knives and other utensils can be arranged horizontally.

You can remove the knife shelf to wash taller utensils.

Folding spikes *

* depending on model

The spikes can be folded down to improve arrangement of pans, bowls and glasses.

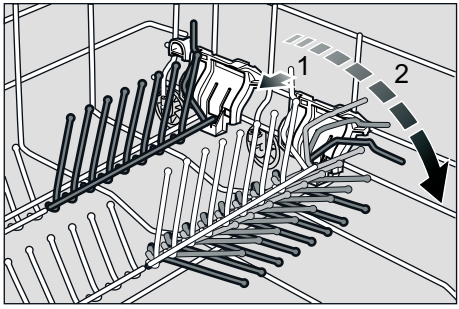

Small accessories holder *

* depending on model

Light-weight plastic accessories, e.g. cups, lids, etc. can be held securely in the small accessories holder.

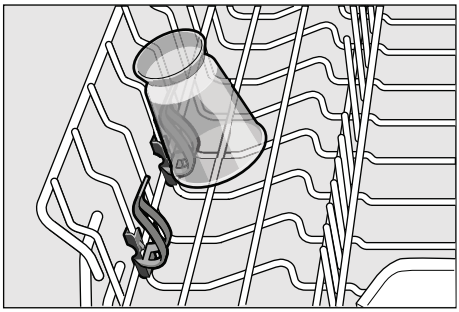

Adjusting the height of the basket *

* depending on model

If required, the height of the upper utensils basket 20 can be adjusted to provide more space for tall utensils either in the upper or lower basket.

Appliance height 81 cm

	Top basket	Bottom basket
Setting 1 max. ø	20 cm	28 cm
Setting 2 max. ø	25 cm	23.5 cm

Select one of the two following procedures according to the design of the top basket for your appliance model:

Top basket with side levers

– Pull out the top basket 20 out.
– To **lower** the basket, press in the left and then the right lever on the outside of the basket. In doing so, hold the sides of the basket along the upper edge to prevent it from suddenly dropping.

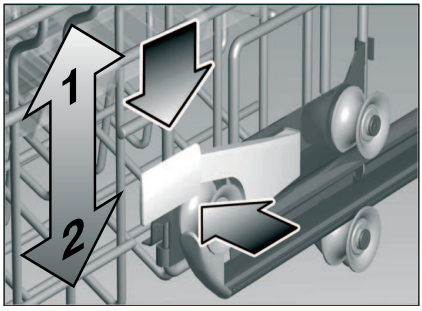

– To **raise** the basket, hold the basket on the sides of the upper edge and lift it up.
– Before re-inserting the basket again, ensure that it is at the **same height** on both sides. Otherwise, the appliance door cannot be closed and the upper spray arm will not be connected to the water circuit.

Top basket with upper and lower roller pairs

– Pull out the top basket 20 out.
– Remove the upper basket and re-attach it to the upper (stage 2) or lower (stage 1) rollers.

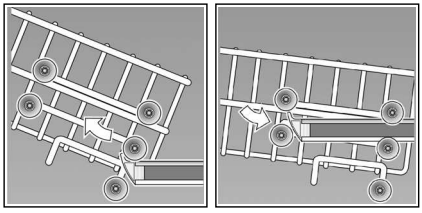

Detergent

You can use tablets as well as powder or liquid detergents for dishwashers, but never use washing up liquid. The dosage can be individually adjusted with powder or a liquid detergent according to the degree of soiling. Tablets contain an adequately large amount of active ingredients for all cleaning tasks. Modern, powerful detergents predominantly use a low-alkaline formulation with phosphate and enzymes. Phosphates bond the lime in the water. Enzymes break down starch and remove protein. Phosphate-free detergents are less frequent. These have a slightly weaker lime bonding capacity and require a higher dosage. To remove coloured stains (e.g. tea, tomato sauce), oxygen-based bleaching agents are usually used.

Note

To ensure a good washing result, always follow the instructions on the detergent packaging!

If you have further questions, we recommend that you contact the detergent manufacturers' helpline.

⚠ Warning

Read and observe the safety information and instructions for use on the packaging for cleaning and rinsing agents.

Adding detergent

– If the detergent dispenser [30] is still closed, press the lock [28] to open the detergent dispenser.

  Pour detergent into the dry detergent dispenser [30]. Dosage: see manufacturer's instructions on the packaging.

  The graduated detergent dispenser [30] helps you add the correct amount of powder or liquid detergent.

  Usually 20 ml–25 ml are adequate for normal soiling. If using tablets, one tablet is adequate.

– Close cover on the detergent dispenser. To do this, (1) push the dispenser cover shut and (2) press gently on the end until the catch engages audibly.

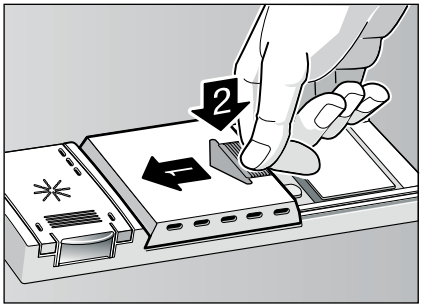

  If using tablets, please refer to the manufacturer's packaging where to put the tablets (e.g. cutlery basket, detergent dispenser, etc.). Even if using tablets, ensure that the detergent dispenser cover is closed.

Tip

If the utensils are only lightly soiled, slightly less than the indicated amount of detergent is usually adequate.

Suitable detergents and care products can be purchased online via our website or via customer service (see back page).

Combination detergent

Apart from conventional detergents (Solo), a number of products are offered with additional functions. These products contain not only the detergent but also rinse-aid and salt replacement substances (3in1) and, depending on the combination (4in1, 5in1, etc.), additional components such as glass protection or stainless steel cleaner. Combination detergents function only up to a specific degree of hardness (usually 26° Clarke). Over this limit salt and rinse-aid must be added.

As soon as combined detergents are used, the rinse programme is adjusted automatically to ensure the best possible rinsing and drying result.

Notes

– You will obtain optimum rinsing and drying results by using solo detergents and applying salt and rinse aid separately.
– If programmes are short, tablets may not have full cleaning effect due to different dissolving properties and there may even be undissolved detergent residue. It is recommended to use washing powder for these programmes.
– The Intensive programme (on some models) requires one tab only. When using washing powder, you can apply some of this cleaning agent to the inside of the appliance's door.
– Even if the rinse-aid and/or salt refill indicator is lit, the rinse programme will run correctly with combined detergents.
– If using detergents in a water-soluble protective cover: Take hold of the cover with dry hands only and put the detergent into an absolutely dry detergent dispenser only, otherwise the detergent may stick.
– If you switch from combined detergents to solo detergents, ensure that the water softening system and amount of rinse aid have been set to the correct value.

Overview of programmes

The max. possible number of programmes is illustrated in this overview.
The corresponding programmes and their arrangement can be found on the fascia.

Type of utensils	Type of soiling	Programme	Possible additional options	Programme sequence
pots and pans, non-sensitive utensils and cutlery	very adhesive burned-in or dried-on food remnants containing starch or protein	 Intensive 70°	all	Prerinse Clean 70° Intermediate rinse Final rinse 70° Dry
mixed utensils and cutlery	part dried, common household food remnants	 Normal 65°		Prerinse Clean 65° Intermediate rinse Final rinse 70° Dry
		 Eco 50°		Prerinse Clean 50° Intermediate rinse Final rinse 65° Dry
sensitive utensils, cutlery, temperature-sensitive plastic and glasses	slightly adhesive, fresh food remnants	 Gentle 40°	Reduce Time Half load	Prerinse Clean 40° Intermediate rinse Final rinse 55° Dry
		 Quick 45°	none	Clean 45° Intermediate rinse Final rinse 55°
all types of utensils	cold rinsing, intermediate cleaning	 Prerinse	none	Prerinse

Programme selection

You can select a suitable programme according to the type of utensils and degree of soiling.

Information for test institutes

Test institutes can request the conditions for running comparison tests by sending an e-mail to
dishwasher@test-appliances.com.
Quote the appliance number (E-Nr.) and the production date (FD) which you can find on the rating plate [31] on the appliance door.

Additional options

* depending on model

Additional options can be set with the buttons 7.

Express Wash/ Speed Perfect *

The >>Express Wash/ Speed Perfect<< function can reduce the running time by approx. 20% to 50% depending on the selected rinse programme. To obtain optimum cleaning and drying results at a reduced running time, water and energy consumption are increased.

Half load *

If you have only a few items to wash (e.g. glasses, cups, plates), you can switch to “half load”. This will save water, energy and time. It is recommended to put a little less detergent in the detergent dispenser than for a full load.

Washing the dishes

Programme data

The programme data (consumption values) can be found in the summary of instructions. This data refers to normal conditions and the water hardness set value 2. Different influencing factors such as water temperature or mains pressure may result in deviations.

Switching on the appliance

- Turn on the tap fully.
- Open the door.
- Switch on the main switch 1.
  The display of the last selected programme lights up. This programme runs if no other programme button 8 is pressed.
- Close the door.
  The programme starts running.

Timer programming *

* depending on model

You can delay
the start of the programme in 1 hour steps up to 9 hours.

- Open the door.
- Switch on the main switch 1.
- Press timer programming button 3 until the display is lit.
- Keep pressing the timer programming button 3 until the time you require (3, 6 or 9 hours) is displayed.
- To delete the timer programming, keep pressing the timer programming button 3 until the display goes out.
  You can change your programme selection at any time until the programme starts.
- Close the door.

End of programme

The programme has ended when the programme end display 4 and the display of the executed programme are lit.

The end of the programme is also indicated by an acoustic signal. This function can be changed as follows:

– Open the door.
– Hold down programme button C and switch on the main switch 1.
– Release both buttons.
  The programme button C flashes.

To change the setting:

– Press programme button C. Each time the Programme button C is pressed, the buzzing sound changes in 4 stages (from off to loud).
– Switch off main switch 1, the set value is saved.
– Close the door.

Switching off the appliance

Short time after the end of the programme:

– Open the door.
– Switch off the main switch 1.
– Turn off the tap (not applicable if Aqua-Stop fitted).
– Remove the utensils when they have cooled down.

⚠ Warning

At the end of the programme please open the door fully and not partially when emptying the dishwasher. Any escaping water vapour could damage sensitive worktops.

Interrupting the programme

– Open the door.
– Switch off the main switch 1.
  The LEDs go out. The programme is saved.
  If the door was opened on an appliance which has a warm water connection or is heated, first leave the door ajar for several minutes and then close. Otherwise, expansion (pressure) may cause the appliance door to spring open or water to run out of the appliance.
– To continue the programme, switch on the main switch 1 again.
– Close the door.

Terminating the programme (Reset)

– Open the door.
– Simultaneously press programme buttons A and C for approx. 3 sec.
– Close the door.
  The programme sequence lasts approx. 1 min.
– Programme end display 4 is lit.
– Open the door.
– Switch off the main switch 1.
– Close the door.

Changing the programme

After you have switched the appliance on, it is possible to change the programme within 2 min.

If you want to change the programme afterwards, the appliance waits until the initiated programme section (e. g. washing) ends.

Maintenance and care

A regular inspection and maintenance of your machine will help to prevent faults. This saves time and prevents problems.

Overall condition of the machine

– Check spray arm for grease and limescale deposits.

If you find such deposits:

– Fill detergent dispenser with detergent. Start the appliance without utensils in the programme with the highest rinsing temperature.

Clean the appliance with detergents/ appliance cleaners which are particularly suitable for use with dishwashers.

– Regularly clean door seal with a damp cloth.

Never use a steam cleaner to clean your dishwasher. The manufacturer is not liable for any consequential damage.

Regularly wipe the front of the appliance and fascia with a damp cloth; water and a little washing up liquid are adequate. Do not use sponges with a rough surface or abrasive detergents, as these could scratch the surfaces.

Stainless steel appliances: To prevent corrosion, avoid using sponge cloths or wash them out thoroughly several times before using for the first time.

⚠ Warning

Never use other chlorinated household detergents! Health hazard!

Special salt and rinse aid

– Check the refill indicators 5 and 6. If required, refill salt and/or rinse aid.

Filters

The filters 25 keep large foreign objects in the rinsing water away from the pump. These foreign objects may occasionally block the filters.

– After each wash cycle check the filters for residue and clean if required.
– After unscrewing the coarse microfilter, you can take out the filter group.

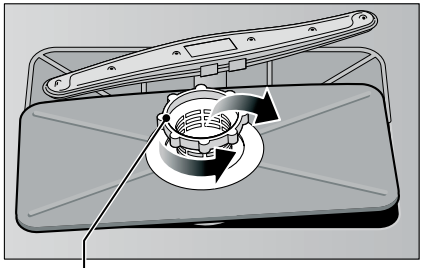

Coarse microfilter

– Remove any residue and clean filters under running water.
– Re-install filter system in reverse sequence and ensure that the arrow marks are opposite each other after closing the filter system.

Spray arms

Limescale and contaminants in the rinsing water may block nozzles and bearings on the spray arms 22 and 23.

- Check outlet nozzles on the spray arms for blockages.
- Unscrew the upper spray arm 22.
- Remove the lower spray arm 23 upwards.

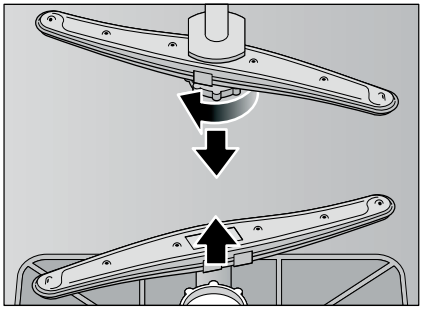

- Clean spray arms under running water.
- Re-engage or screw on spray arms.

Troubleshooting

The majority of faults which could occur in daily operation can be rectified by the user. This ensures that the appliance is quickly available for use again. The following overview will help you locating the causes and gives helpful advise to eliminate them.

Note

If the appliance stops during dishwashing or does not start for no obvious reason, first run the Abort programme function (Reset).

(See chapter entitled “Dishwashing”)

⚠ Warning

Don’t forget: Repairs may be carried out by technicians only. If a component has to be replaced, ensure that only original spare parts are used. Improper repairs or use of non-original spare parts may cause considerable damage and put the user at considerable risk.

Waste water pump

Large food remnants in the rinsing water not retained by the filters may block the waste water pump. The rinsing water is then not pumped out and covers the filter.

In this case:

- First disconnect the appliance from the power supply.
- Remove the filters 25.
- Scoop out water, use a sponge if required.
- Loosen screw on the cover (Torx T 20) and remove the cover.

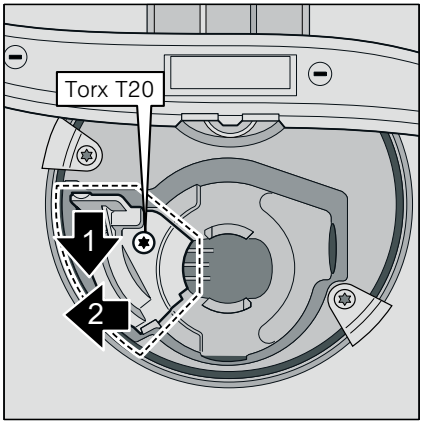

- Check inner compartment and remove any foreign objects.
- Re-insert cover and screw tight.
- Re-insert the filters and screw tight.

... when the appliance is switched on

The appliance does not start.

- The mains fuse has tripped.
- The appliance plug has not been inserted.
- The appliance door has not been shut properly.
- Tap turned off.
- Water supply interrupted.
- Supply hose kinked.
- Filter in the water supply blocked.
  - Switch off the appliance and pull out the mains plug.
  - Turn off the tap.
  - Clean filter in the supply hose.

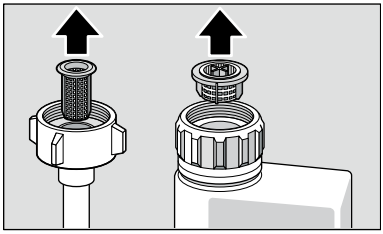

  - Reconnect power supply.
  - Turn on the tap.
  - Switch on the appliance.
- Water is left in the appliance at the end of the programme.
  - Waste water hose is blocked or kinked.
  - Waste water pump blocked, cover on the waste water pump is not locked in position. (see Waste water pump).
  - Filters blocked.
  - The programme has not yet ended. Wait until programme ends or implement “Reset” function.

... on the appliance

Lower spray arm rotates sluggishly.

– Spray arm blocked.

The door is difficult to open. *

– Child-proof lock is activated. The deactivation instructions are at the back in the envelope.

* depending on model

Door cannot be closed.

– Door lock has been activated. To reset, close the door with greater force.

Cover on the detergent dispenser cannot be closed.

– Detergent dispenser overfilled or mechanism blocked by sticky detergent residue.

Detergent residue in the detergent dispenser.

– Dispenser was damp when filled.

Refill indicator for salt 5 and/or rinse-aid 6 is not lit.

– Refill indicator/s switched off.
– Adequate salt/rinse-aid available.

Refill indicator for special salt 5 is lit.

– No salt.
Refill with special salt.

... during the wash cycle

Unusual foam formation.

– Handwash liquid in the rinse aid dispenser.
Spilled rinse aid causes excessive frothing, therefore please remove with a cloth.

Appliance stops during the wash cycle.

– Power supply interrupted.
– Water supply interrupted.

Filling valves making striking noises

– Caused by the installation of the water line and has no effect on the function of the machine. Remedial action is not possible.

Knocking/rattling noise during rinsing

– Spray arm is striking utensils.
– Utensils not arranged correctly.

... on the utensils

Food residue on the utensils.

– Utensils placed too closely together, utensils basket overfilled.
– Too little detergent.
– Rinse programme too weak.
– Spray arm rotation obstructed.
– Spray arm nozzles blocked.
– Filters blocked.
– Filters incorrectly inserted.
– Waste water pump blocked.
– Top basket on right and left not set to same height.

Tea or lipstick residue is not completely removed.

– The detergent has an inadequate bleaching effect.
– Too low rinsing temperature.
– Too little/unsuitable detergent.

White stains on the utensils/glasses remain milky.

If phosphate-free detergents are used with hard tap water, white deposits may be deposited more easily on utensils and the container walls.

- Too little/unsuitable detergent.
- Too weak programme selected.
- No/too little rinse aid.
- No/too little special salt.
- Water softening system set to the wrong value.
- Salt dispenser lock not fastened.

Contact the detergent manufacturer, in particular if:

- the utensils are very wet at the end of the programme.
- limescale forms.

Dull, discoloured glasses, film cannot be washed off.

- Unsuitable detergent.
- Glasses not dishwasher-proof.

Streaks on glasses and cutlery, glasses have metallic appearance.

- Too much rinse aid.

Plastic parts discoloured.

- Too little/unsuitable detergent.
- Too weak programme selected.

Rust spots on the cutlery.

- Cutlery not rust-resistant.
- Salt content in the rinsing water too high, as salt dispenser lock not fastened firmly or salt was spilled while being refilled.

Utensils not dry.

- Appliance door opened too early and utensils taken out too early.
- Programme selected without drying.
- Too little/unsuitable rinse aid.
- Activate intensive drying.
- The combined detergent used has a poor drying performance.

  Use rinse aid (see Rinse aid chapter for setting).

Customer service

If the advice given does not resolve your problem, please contact your customer service. Contact details can be found on the back cover of this instruction manual or in the enclosed customer service list. When calling , please quote the appliance number (1) and the production date (FD = 2) which can be found on the rating plate 31 on the appliance door.

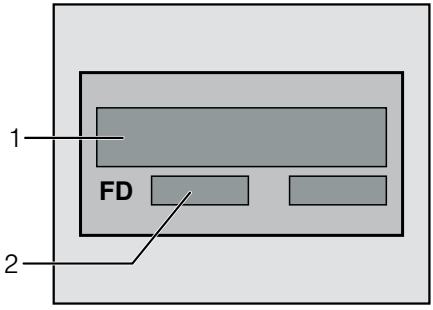

Rely on the expertise of the manufacturer. Call us to ensure that the repair will be carried out by fully-trained service engineers, who are equipped with original spare parts for your appliance.

Installation

The dishwasher must be connected correctly, otherwise it will not function properly. The specifications for the inlet and outlet as well as the electrical connected loads must correspond with the required criteria as specified in the following paragraphs or in the installation instructions.

Install the appliance in the correct sequence:

- Checking appliance on delivery
- Installing the appliance
- Waste water connection
- Fresh water connection
- Electrical connection

Safety instructions

- Install and connect the appliance according to the installation and assembly instructions.
- Prior to installation, disconnect the dishwasher from the power supply.
- Ensure that the protective conductor system of the domestic supply has been correctly installed.
- The electrical connection conditions must correspond with the specifications on the dishwasher rating plate 31.
- If the power cord of this appliance is damaged, it must be replaced with a particular power cord.

  To prevent injury, the power cord may be replaced by customer service only.
- If the dishwasher is installed in a high-sided unit, the unit must be secured properly.
- Install built-under or integratable appliances only under continuous worktops which have been screwed to adjacent cupboards to ensure stability.
- Do not install the appliance near heat sources (radiators, heat storage tanks, cookers or other appliances which generate heat) and do not install under a hob.
- After installing the appliance, ensure that the plug is easily accessible.
- Some models:

  The plastic housing on the water connection contains an electric valve, the connecting cables are in the supply hose. Do not cut through this hose, do not immerse the plastic housing in water.

⚠ Warning

If the appliance is not in a cavity and a side panel is accessible, the door hinge area must be covered at the side for reasons of safety (risk of injury). The covers are available as optional accessories from customer service or specialist outlets.

Delivery

Your dishwasher has been checked thoroughly in the factory to ensure that it is in working order. This may cause small water stains. These will disappear after the first wash cycle.

Technical specifications

Weight:

max. 53 kg

Voltage:

230 V, 50 Hz

Connected load:

2,3 kW

Fuse:

10/13 A

Water pressure:

at least 0.05 MPa (0.5 bar), maximum 1 MPa (10 bar). At a higher water pressure: connect pressure-reducing valve ahead.

Inlet rate:

minimum 10 litres/minute

Water temperature:

cold water; hot water max. temperature 60 °C.

Installation

The required installation dimensions can be found in the installation instructions. Level the appliance with the aid of the height-adjustable feet. Ensure that the appliance is situated securely on the floor.

- A built-under or integrated appliance which is installed subsequently as a free-standing appliance must be secured to prevent it from overturning, e.g. by screwing it to the wall or by installing it under a continuous worktop which is screwed to adjacent cupboards.
- The appliance can easily be installed in a fitted kitchen between wooden and plastic walls. If the plug is not freely accessible, an allpole disconnector with a contact opening of at least 3 mm must be fitted on the installation side to satisfy the relevant safety instructions.

Waste-water connection

- The required work sequence can be found in the installation instructions. If required, fit a siphon with an drainage connection.
- Connect the waste-water hose to the drainage connection of the siphon with the enclosed parts.

  Ensure that the drainage hose is not kinked, crushed or twisted and that there is no cover plate in the drainage to prevent the waste water from flowing out!

Fresh water connection

- Connect the fresh-water connection to the tap according to the installation instructions with the enclosed parts.

  Ensure that the fresh-water connection is not kinked, crushed or twisted.
- When replacing the appliance, always use a new water supply hose.

Water pressure:

at least 0.05 MPa (0.5 bar), maximum 1 MPa (10 bar). At a higher water pressure: connect pressure-reducing valve ahead.

Inlet rate:

minimum 10 litres/minute

Water temperature:

cold water preferred; hot water max. temperature 60 °C.

Electrical connection

- Connect the appliance only to 230 V and 50 Hz alternating current via a correctly installed socket with protective conductor. See rating plate for required fusing [31].
- The socket must be near the appliance and freely accessible following installation.
- The connection may be modified by technicians only.
- A power cord extension may be purchased from customer service only.
- Use only a residual current operated circuit-breaker which features the symbol . Only this extension guarantees compliance with the currently valid regulations.

Removing the appliance

Also observe the sequence of worksteps here.

- Disconnect the appliance from the power supply.
- Turn off the water supply.
- Disconnect the waste water and fresh water connections.
- Loosen the fastening screws under the worktop.
- If fitted, remove the base panel.
- Pull out the appliance, carefully pulling the hose behind.

Transportation

Empty the dishwasher and secure loose parts.

Drain the appliance according to the following steps:

- Turn on the tap.
- Open the door.
- Switch on the main switch 1.
- Select programme A.
- Close the door.
  Programme sequence starts.
- Open door after approx. 4 minutes.
- End the programme by simultaneously pressing buttons A and C.
- Close the door.
- Open door after approx. 1 minute.
- Switch off main switch 1 and turn off the tap.

Transport appliance upright only.

(This prevents residual water from running into the machine control and damaging the programme sequence.)

Protection against frost

If the appliance is in a room where there is a risk of frost (e.g. holiday home), empty the appliance completely (see Transportation).

- Turn off the tap, disconnect supply hose and drain water.

Waste disposal

Both the packaging of new appliances and the old appliances themselves contain valuable raw materials and recyclable materials.

Please dispose of the individual parts separated according to type.

Please ask your dealer or inquire at your local authority about current means of disposal.

Packaging

All plastic parts of the appliance are identified with internationally standardised abbreviations (e.g. >PS< polystyrene). Therefore, plastic waste can be sorted out when the appliance is being disposed of.

Please follow the safety instructions under “Delivery”.

Old appliances

Please follow the safety instructions under “Disposal of your appliance”.



This appliance is identified according to the European guideline 2002/96/EC on waste electrical and electronic equipment – WEEE. The guideline specifies the framework for an EU-wide valid return and re-use of old appliances.

Subject to changes.

Childproof lock (door lock) *

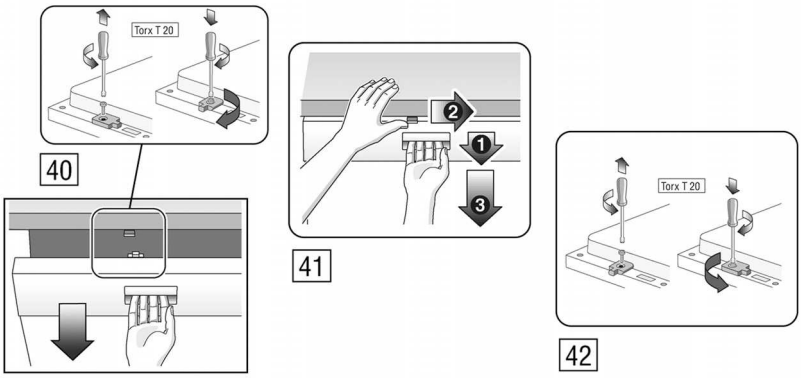

40 Activate the childproof lock.
41 Open the door with activated childproof lock.
42 Deactivate childproof lock.

Always close the appliance door completely when you leave the appliance.
This is the only way you can protect your children from potential dangers.

Baking sheet spray head *





Large sheets or grilles and plates which have a diameter greater than 30 cm (gourmet plates, pasta plates, dinner plates) can be cleaned with the aid of the spray head.
To do this, remove the top basket and insert the spray head as illustrated in the diagram.

To ensure that the spray jet can reach all parts, arrange the baking sheets as illustrated (max. 2 baking sheets and 2 grilles).

Never operate the dishwasher without the top basket or baking sheet spray head!

* some models

AQUA-STOP guarantee (does not apply to appliances without Aqua-Stop)

In addition to warranty claims against the seller based on the purchase contract and in addition to our appliance warranty we will pay damages under the following conditions:

1. If our Aqua-Stop system is defective and causes water damage, we will make good the damage for private users. To ensure water damage protection, the appliance must be connected to the power supply.
2. This liability guarantee is valid for the service life of the appliance.
3. A prerequisite for the warranty claim is that the appliance has been correctly installed and connected with Aqua-Stop according to our instructions. This also includes the correct installation of the Aqua-Stop extension (original accessory). Our warranty does not extend to defective feed lines or fittings up to the Aqua-Stop connection on the tap.
4. If your appliance is fitted with Aqua-Stop, you can leave your appliance unattended during operation and leave the tap turned on afterwards. The tap should only be turned off if you are absent from home for a prolonged period, e.g. several weeks holiday.

☎ Repair order and advice on faults.

GB	0844 8928979	Calls from a BT landline will be charged at up to 3 pence per minute. A call set-up fee of up to 6 pence may apply.
IE	01450 2655	
US	800 944 2904	toll-free

Contact information for all countries can be found on the enclosed customer service list.

Robert Bosch Hausgeräte GmbH
Carl-Wery-Straße 34
81739 München
Germany
www.bosch-home.com

9000204520 en (9011) 450J+