Household Appliances

9000 044 386 (8409)

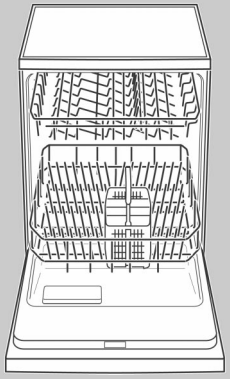

en Instructions for Use

Internet:http://www.bosch-hausgeraete.de
Bosch Info-Team: DE Tel. 01 80/5 30 40 50 (EUR 0,12/Min. DTAG)

BOSCH

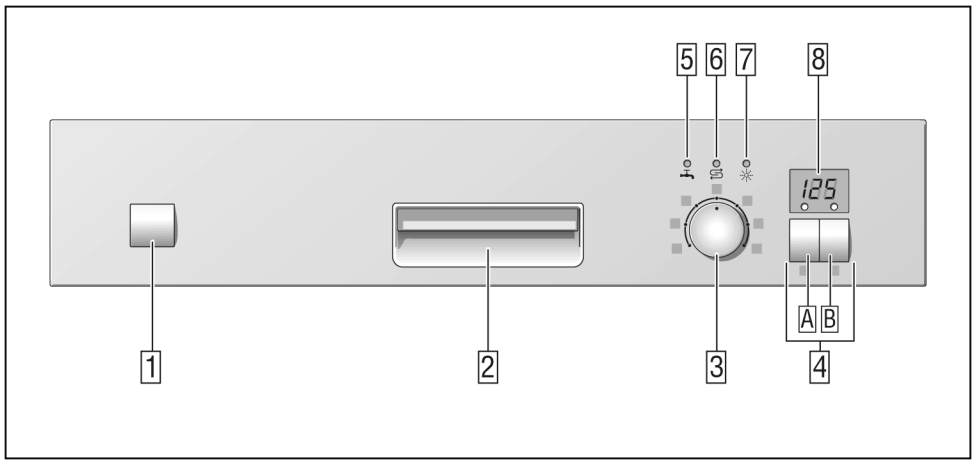
5
6
7
8
125
A
B
1
2
3
4

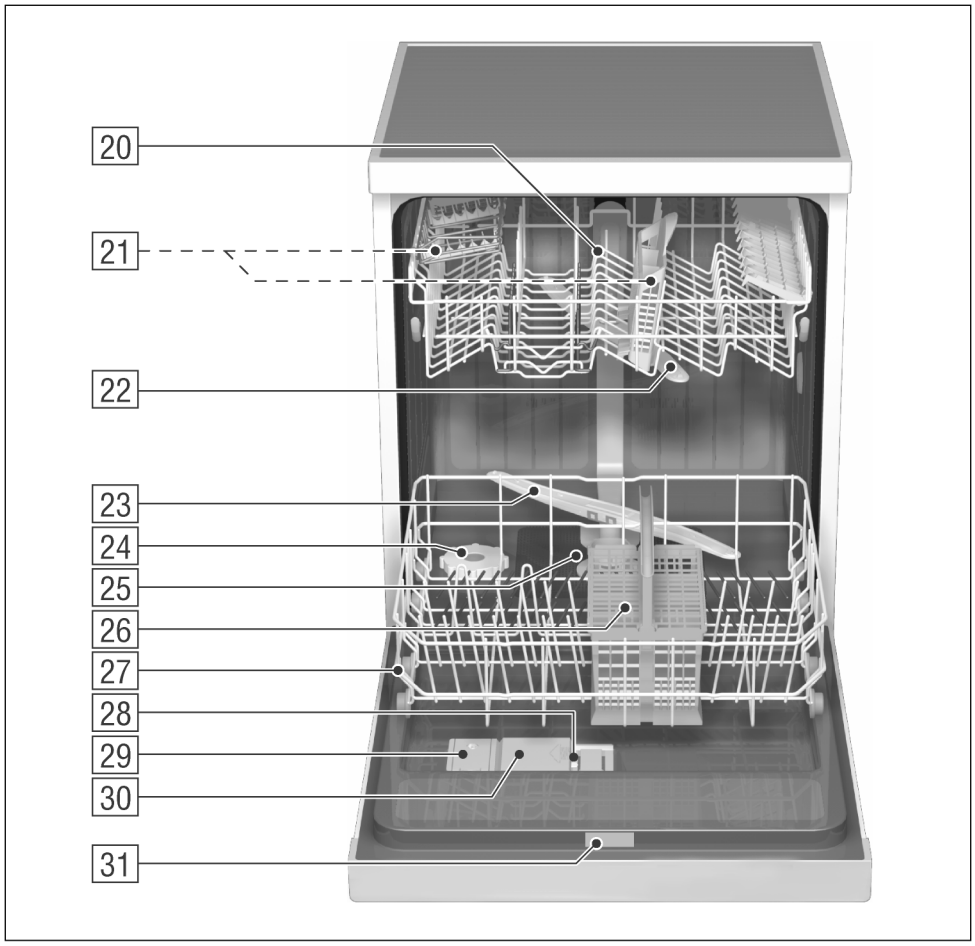
20
21
22
23
24
25
26
27
28
29
30
31

en

Index

Safety instructions 4
Getting to know your appliance . . 6
Water softener 7
Filling in the Salt 8
Filling the rinse-aid container 9
Not suitable for the dishwasher . . 10
Arranging crockery, glasses, etc. in the dishwasher 11
Detergents 15
auto 3in1 17
Programme overview 19
Washing dishes 20
Additional functions 22
Maintenance and care 23
Fault finding 25
Customer Service 28
Information 29
Installation 29
Waste disposal 31

Safety instructions

Delivery

- Immediately check the packaging and dishwasher for any damage which may have been caused in transit. Do not use a damaged appliance, but consult your supplier.
- Please dispose of packaging material properly:
  - The corrugated cardboard consists mainly of waste paper.
  - The polystyrene moulded parts have been foamed without any CFCs.
  - The polyethylene film (PE) consists partly of secondary raw material.
  - The wooden frames (if fitted) are made of residual wood and are untreated.
  - The hoops (if fitted) consist of polypropylene (PP).

Installation

- Install and connect the appliance according to the installation and assembly instructions.
- The dishwasher must NOT be connected to the power supply during installation.
- Ensure that the protective conductor system of the domestic electricity supply has been installed correctly.
- Electrical connection conditions must correspond with the specifications on the rating plate of the dishwasher.
- If the dishwasher is to be installed in a high-sided unit, ensure that the unit is attached properly and also at the rear.
- Built-under and built-in appliances should always be installed under a continuous work surface which is attached to the adjacent cupboards, in order to ensure that the appliance is entirely stable.
- After the appliance has been installed, the mains plug should still be easily accessible.
- Not on all models:
  The plastic housing on the water input contains an electrically operated valve. The connecting wires are inside the inlet hose. Do not cut through this hose and do not immerse the plastic housing in water.

Warning

For safety reasons, if the appliance is not fitted in a recess, thereby making a side wall accessible, the door hinge area should be covered at the side.
(Risk of injury)
Covers are available as optional accessories from customer services or specialist stores.

In daily use

Warning

Knives and other utensils with sharp points must be placed in the baskets either flat or with the points downwards.

- Use the dishwasher only in the household and only for its designed purpose, i.e. for washing domestic dishes.
- Do not lean or sit on the open door. The appliance could tip.
- The water in the appliance is not drinking water.
- Do not add any solvents to the washing chamber. Danger of explosion!
- Open the door carefully when the programme is still running. Water could spray out of the appliance.
- To prevent injuries, e.g. caused by stumbling, open the dishwasher only briefly in order to load and unload the dishwasher.
- Read and observe the safety information and instructions for use on the packaging for cleaning and rinsing agents.

Children in the household

- Do not let infants play or operate the dishwasher.
- Keep cleaning and rinsing agents out of the reach of infants.
- Keep infants away from the open dishwasher. It could contain residue of the cleaning agent.

Child lock *

* on applicable models

Please refer to the drawings enclosed in the envelope

40 Engaging the child lock

41 Opening the door with the child lock engaged

42 Disengaging the child lock

If a fault occurs

- Repairs or other work on the dishwasher should only be carried out by a qualified specialist.
- The dishwasher must be disconnected from the electricity supply before any repairs or other work are started. Pull the mains plug out of the wall socket or switch off at the fuse box. Grasp the plug to remove it from the socket; do not tug on the cable. Turn the water off at the tap.

When disposing of old appliances

- Appliances that have reached the end of their service life should be rendered inoperable in order to exclude the possibility of subsequent accidents. Pull the mains plug out of the wall socket, cut through the connecting cable and disable the door lock.
- Take the appliance to a designated waste disposal centre.

Warning

Children could get locked in the appliance (risk of suffocation) or get stuck in other positions.
Therefore: Remove the mains plug, cut the mains wire and set aside. Damage the door lock so that the door can no longer be closed.

Getting to know your appliance

Diagrams of the control panel and the interior of the appliance can be found in the envelope at the front.
Individual positions are referred to in the text.

Control panel

1 Main switch
2 Door Opener
3 Programme selector (retractable*)
4 Additional options*
5 “Check water supply” display
6 Salt refill indicator
7 Rinse-aid refill indicator
8 Digital display

* some models

Appliance interior

20 Upper basket with additional cup rack
21 Additional cutlery basket* for the top basket*
22 Top spray arm
23 Bottom spray arm
24 Dispenser for salt
25 Filters
26 Cutlery basket
27 Bottom basket
28 Lock for detergent dispenser
29 Dispenser for rinse-aid with refill indicator
30 Detergent dispenser
31 Rating plate

* some models

You will need to purchase the following before using the dishwasher for the first time:

– special salt for use in dishwashers
– detergent
– rinse-aid

Only use products, which are suitable for dishwashers.

Water softener

In order to rinse dishes and glasses satisfactorily, the dishwasher requires soft water, i.e. containing little or no lime, otherwise water stains will be left behind on crockery and glasses, etc.
If the tap water exceeds a certain level of hardness, it must be softened, i.e. decalcified, so that it can be used in the dishwasher.
This is achieved by adding a special salt to the water softener inside the dishwasher.
The water softener, that is the required amount of salt, is set up according to how hard the tap water is.

Setting up the water softener

- Determine the level of hardness of your tap water. Your local water company or service agent can help you with this.
- Identify setting from the following water hardness table.

Water hardness table

°dH	°fH	°Clarke	mmol/l	
0 - 6	0 -11	0 - 8	0 -1,1	H0
7 - 8	12-15	9 -10	1,2-1,4	H1
9 -10	16-17	11-12	1,5-1,8	H2
11-12	18-21	13-15	1,9-2,1	H3
13-16	22-29	16-20	2,2-2,9	H4
17-21	30-37	21-26	3,0-3,7	H5
22-30	38-54	27-38	3,8-5,4	H6
31-50	55-89	39-62	5,5-8,9	H7

- Close the door
- Rotate the programme selector 3 from the 12 o'clock position by one notch to the left.

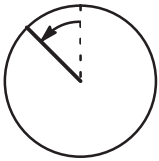

- Switch on main switch 1 and hold down for at least 3 sec.
  The digital display 8 indicates the current set hardness value and the salt refill indicator 6 flashes
  (hardness value has been set to 4 at the factory).
- To change the setting: Rotate the programme selector 3.
  You can select a set value between 0 and 7 according to the hardness of your water.
- Switch off the main switch 1.
  The chosen setting has now been stored.

Approx. 4 litres of water are required for regenerating the water softening system. The overall water consumption per load can therefore be increased by between 0 and a maximum of 4 litres according to the water hardness setting.

Filling in the Salt

Function of the salt

During the rinse cycle the salt is being washed automatically from the salt compartment into the softening system where it will dissolve the lime.
The lime-containing solution drains from the dishwasher. Afterwards the softening system is ready to be loaded again.
This regeneration cycle will only work if the salt is dissolved in water.

- Open the screw-type cap of the compartment 24 .
- Before switching on the appliance for the first time, pour approx. 1 litre of water into the salt dispenser.
- Then refill with salt **(not cooking salt)** until the salt container is full (max. 1.5 kg). When you refill the salt, water is being displaced and drains off. Therefore, to prevent corrosion, always refill with salt immediately before switching on the dishwasher. This way the overflowing salt solution is diluted and flushed immediately. Use the enclosed salt filling aid.
- Then clean the filling area of salt residues and screw the compartment lid back on without tilting the lid.

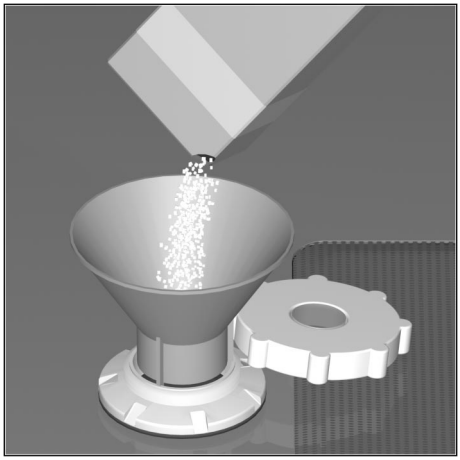

The LOW SALT indicator 6 on the front panel will light up initially but will extinguish again after a short period when the salt solution has become sufficiently concentrated.

If the set hardness value is 0, do not add salt because no salt is used during operation; the salt refill indicator is switched off.

Do not pour detergent into the container for special salt. This would destroy the water softener.

Salt refill indicator

As soon as the salt refill indicator 6 is lit on the control panel, refill with salt immediately before the next rinse cycle.

Depending on the washing frequency and the hardness setting, the regeneration salt may not have to be topped up for several months.

Filling the rinse-aid container

The purpose of a rinse-aid is to prevent the formation of water marks on tableware and utensils, and to ensure that glasses are clean and sparkling. The rinse-aid is consumed during the washing process.

- Fold back the lid on the rinse-aid container 29 .

  To open the lid, press the mark (1⬇) on the rinse-aid lid and simultaneously lift the lid off the lug (2⬆).

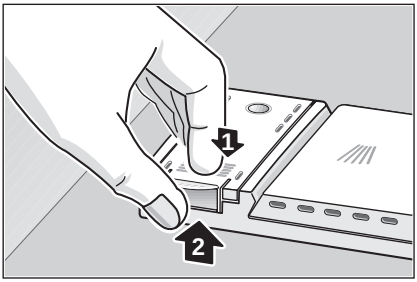

- Pour the rinse-aid into the filler hole until the level indicator turns dark.

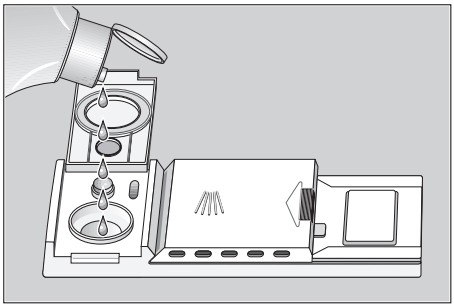

- Close the lid, ensuring that you hear it snap closed.

Use only rinse aid for domestic dishwashers. Spilt rinse aid may result in excessive foam formation in the next rinse cycle. Therefore, remove any spilt rinse aid with a cloth.

Adjusting the amount of rinse-aid

The amount of rinse-aid added to the water can be varied by adjusting the stepless control. The rinse-aid control has been set to ”4” in the factory.

Do not alter the setting of the rinse-aid control unless streaks (turn knob towards ”–”) or water marks (turn knob towards ”+”) are left on the dishes.

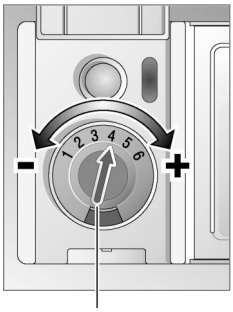

29

rinse–aid control

Low rinse-aid indicator

As long as the rinse-aid refill indicator on the panel 7 (on applicable models) or dispenser 29 has not illuminated, there is sufficient rinse-aid in the dishwasher.

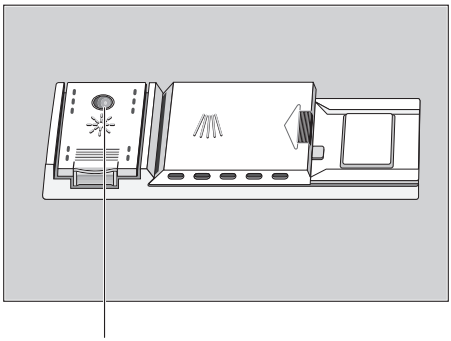

LOW RINSE-AID indicator

Switching the rinse-aid refill indicator off or on*

* some models

You can switch off the rinse-aid refill indicator 7 if you use a detergent with integrated rinse-aid.

- Close the door.
- Press and hold down button A.
- Press main switch 1 until the digital display lights up.
- Release both buttons.
  The digital display 8 indicates 1 (rinse-aid refill indicator) and the button A flashes.
- By pressing button A you can switch the rinse-aid indicator off 0 or on 1 .
- Switch off the main switch 1;

The setting is saved.

“Remember to switch on the rinse-aid refill indicator again if you use a detergent without an integrated rinse-aid!”

Not suitable for the dishwasher

The following should not be cleaned in the dishwasher:

- Wooden cutlery and utensils – these will leach out and become unsightly; even the utilised stickers are not suitable for the temperatures which occur.
- Sensitive ornamental glasses, craft utensil and vases, special antique or irretrievable utensils. These ornaments are not dishwasher-proof.
- Plastic parts sensitive to hot water.
- Copper and tin utensils.
- Utensils which are soiled with ash, wax, lubricating grease or ink.
- Absorbent materials such as sponges and cloths.

Aluminium and silver parts have a tendency to discolour and fade during the wash cycle. Even some types of glass (e.g. crystal glass objects) may turn cloudy after many wash cycles.

Recommendation:

In future buy utensils which are identified as dishwasher-proof.

Damage to glassware and other dishes

Possible causes:

- type of glass or manufacturing process
- chemical composition of detergent
- water temperature and duration of dishwasher programme.

Suggested remedy:

- Use glassware or porcelain dishes that have been marked ’dishwasher–proof’ by the manufacturer.
- Use a mild detergent that is described as ’kind to dishes’. If necessary, seek further information from detergent manufacturers.
- Select a programme with as low a temperature and as short a duration as possible.
- To prevent damage, take glass and cutlery out of the dishwasher as soon as possible after the programme has ended.

Arranging crockery, glasses, etc. in the dishwasher

Loading the dishwasher

- Scrape off any large amounts of left-over food. It is not necessary to rinse the dishes under running water.
- Place objects in the dishwasher in such a way that
  - items such as cups, glasses, pots/pans, etc. are stood upside down,
  - curved items, or those with recesses, should be at a slant so that water can run off,
  - they are stacked securely and cannot tip over,
  - they do not prevent the spray arms from rotating while washing takes place.

Very small items should not be washed in the dishwasher as they could easily fall out of the baskets.

Removing the dishes

To prevent water dripping from the top basket onto the dishes in the lower basket, we recommend that you empty the lower basket first and then the top basket.

Cups and glasses

Upper basket 20

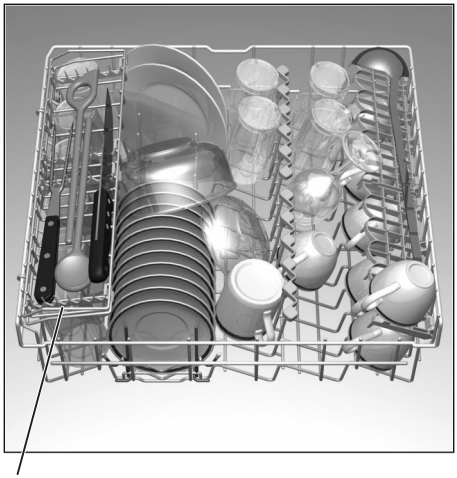

* not included with all models

Pots and pans

Lower basket 27

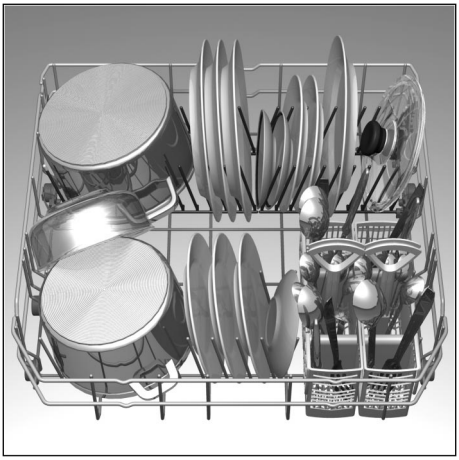

Cutlery

Cutlery should be placed in the dishwasher always unsorted and with the eating surface pointing downwards. The spray jet is then better able to reach the individual parts.

To prevent injuries, place long, pointed accessories and knives on the étagère (some models) or on the knife shelf (available as an accessory).

Folding spikes *

* on applicable models

To improve stacking of pots and pans, the spikes can be folded down.

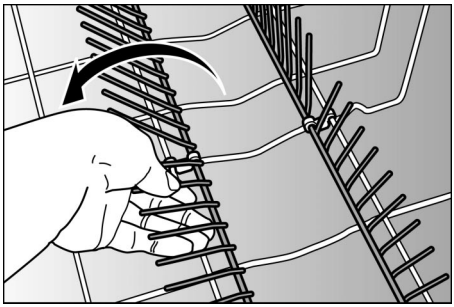

Shelf *

* not on all models

Lean tall glasses and those with long stems against the shelf – not against other items to be washed.

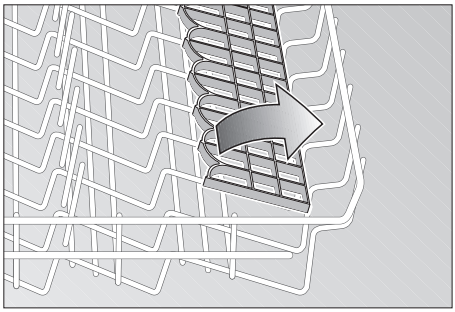

Long items, serving cutlery, salad servers or knives should be placed on the shelf so that they do not obstruct the rotation of the spray arms. The shelf can be folded back when not required for use.

Small accessories holder*

* some models

Light-weight plastic accessories, e.g. cups, lids, etc. can be held securely in the small accessories holder.

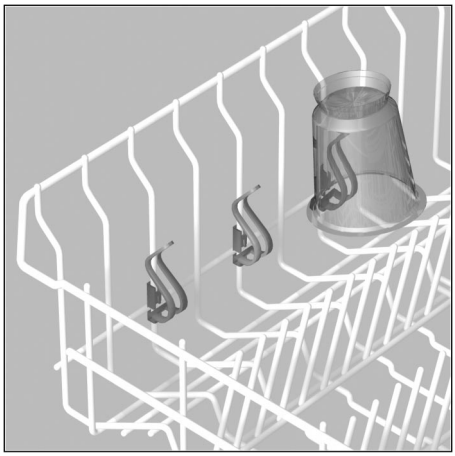

Adjusting position of basket *

* not on all models

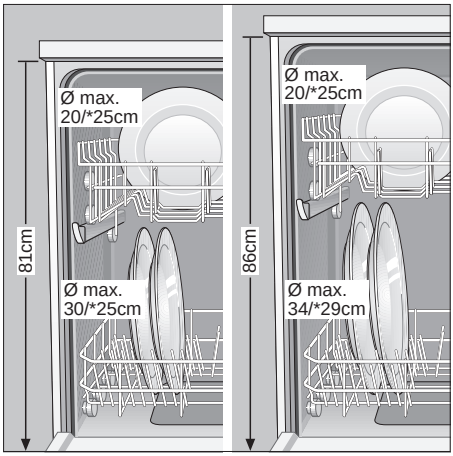

If required, the height of the top basket can be adjusted in order to create more space for large utensils either in the top or bottom basket.

Select one of the two following procedures according to the design of the top basket for your appliance model:

Top basket with upper and lower roller pairs

- Pull out the top basket.
- Remove the top basket and re-attach it to the upper or lower rollers.

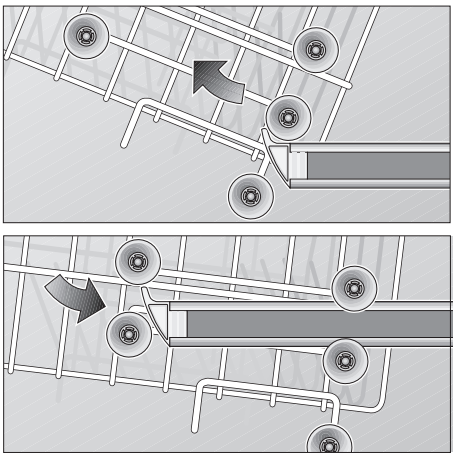

Top basket with side levers (Rackmatic)

– Pull out the top basket.

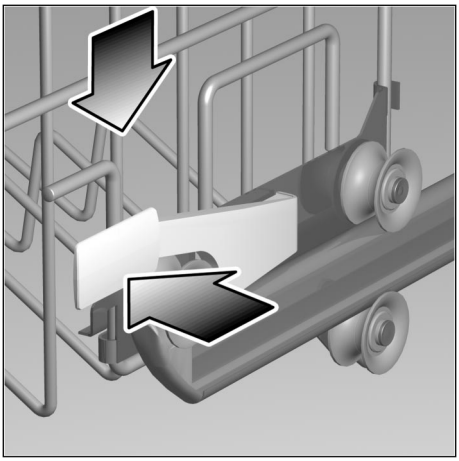

– To lower the basket, press in succession the two levers on the left and right sides of the basket. Always take hold of the side of the basket on the upper edge, otherwise the basket will not drop smoothly (and may damage the utensils).

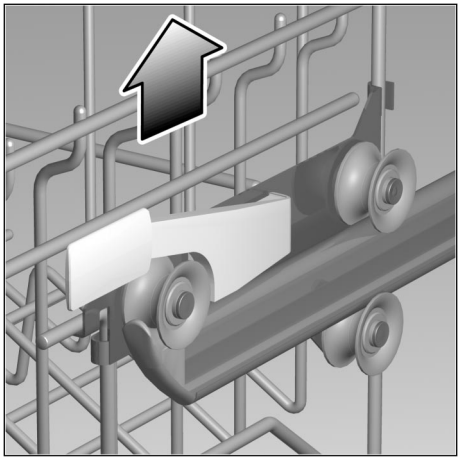

– To raise the basket, take hold of the basket on the upper edge and pull upwards.

– Before you re-insert the basket, ensure that it is at the same height on both sides. Otherwise, the appliance door cannot be closed and the upper spray arm will not connect to the water circuit.

Baking sheet spray head *

* some models

You can clean large baking sheets or grilles with the baking sheet spray head. To do this, remove the top basket and insert the spray head as illustrated in the diagram.

To ensure that the spray jet can reach all parts, arrange the baking sheets as illustrated
(max. 4 baking sheets and 2 grilles).

Detergents

Information about detergents

You can use any brand of liquid or powder detergent, as well as tablets, that have been specifically designed for use in domestic dishwashers. (Do not use normal washing-up liquid!)

Nowadays there are three types of dishwasher detergent available:

1. those containing phosphates and chlorine,
2. those containing phosphates but no chlorine,
3. those containing neither phosphates nor chlorine.

When a phosphate-free detergent is used in conjunction with hard water, there is a greater possibility that white marks will be left behind on crockery and glasses, etc. These can be avoided by pouring an increased amount of detergent into the dispenser.

Chlorine-free detergents have a reduced bleaching effect. This can mean that tea stains are not completely removed or plastic items become discoloured.

This can be resolved by:

- selecting a higher temperature programme, or
- increasing the amount of detergent, or
- using a detergent that contains chlorine.

Check the label on the detergent packaging to determine whether a particular product is suitable for use with silverware.

If you have any further questions, we recommend that you contact the customer advice departments of the various detergent manufacturers.

Detergent compartment with measuring marks

The side of the detergent compartment is marked with lines to help you determine how much powder to add.
The capacity of the detergent container is 15 ml up to the bottom line and 25 ml up to the middle line. When the compartment is full it contains 40 ml.

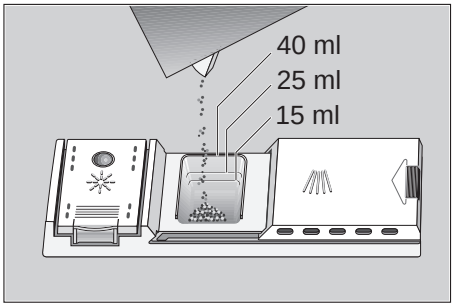

If the detergent dispenser 30 is still closed, press the lock 28 to open the detergent dispenser.

Adding detergent

- Fill the dispenser 30 with detergent.
  Please observe the manufacturer's instructions printed on the detergent packaging when determining the correct dosage.

Important

Due to the different solvency properties of the detergent tablets supplied by various manufacturers, the cleaning efficiency of the detergent may not be fully utilised by short programmes. It is recommended to use washing powder for these programmes.

- If using the "Intensive" programme (some models), also pour approx. 10–15 ml of detergent onto the appliance door. If using tablets, also place a tablet on the appliance door.

Reduce costs!

If your dishes are only moderately dirty, you may be able to use less detergent than recommended.

- Close the lid on the detergent compartment.
  Press down the lid (1) until it clicks shut (2).

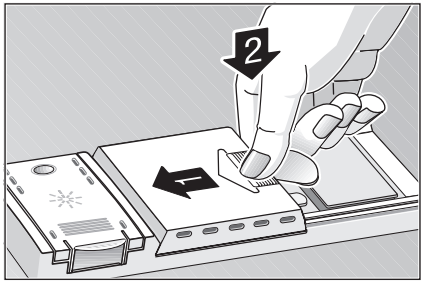

- If you are using detergent in tablet form, read the manufacturer's recommendations on the packaging in order to
  determine where the tablets should be placed inside the dishwasher (e.g. in cutlery basket, detergent compartment, etc.).
  Make sure that the lid on the detergent compartment is closed, even if you are using tablets.

auto 3in1

The use of so-called combined detergent products may make the use of rinse aid and/or salt unnecessary.

There are currently several types of combined detergent products available.

- **3in1:** They contain detergent, rinse aid **and** salt function.
- **2in1:** They contain detergent and rinse aid **or** salt function.

>>> Always check the type of detergent or combined product which you are using!

Always follow the operating instructions or the information on the packaging.

The rinse programme is automatically adjusted in order to obtain the best possible rinsing and drying result.

Observe the following important information if using combined cleaning products:

- Regeneration salt is not required up to a water hardness of 21° dH (37° fH, 26° Clarke, 3.7 mmol/l) only. No other settings on the appliance are required.
- Salt is still required if the water hardness is **above** 21° dH (37° fH, 26°Clarke, 3.7 mmol/l). Fill the salt dispenser with salt [24] and select setting 6 on the water softening system.

If in doubt, please contact the detergent manufacturer, especially if:

- the utensils are very wet at the end of the programme.
- limescale forms.

Note

Optimum rinsing and drying results can be obtained by using standard detergents in conjunction with separate application of salt and rinse aid.

Observance of the operating instructions or information on the packaging of the combined detergents determines their effectiveness.

Note

Even if the rinse aid and/or salt refill indicator is lit, the rinse programme runs correctly when 3in1 products are used.

If the rinse aid refill indicator [7] or salt refill [6] indicator is defective and you would like to switch it off, proceed as follows:

Switching the rinse-aid refill indicator off or on*

* some models

You can switch off the rinse-aid refill indicator [7] if you use a detergent with integrated rinse-aid.

- Close the door.
- Press and hold down button [A].
- Press main switch [1] until the digital display lights up.
- Release both buttons.
  The digital display [8] indicates 1 (rinse-aid refill indicator) and the button [A] flashes.
- By pressing button [A] you can switch the rinse-aid indicator off 0 or on 1 .
- Switch off the main switch [1];

The setting is saved.

“Remember to switch on the rinse-aid refill indicator again if you use a detergent without an integrated rinse-aid!”

Switching the salt refill indicator / water softening system off and on

- Close the door
- Rotate the programme selector 3 from the 12 o'clock position by one notch to the left.

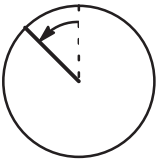

- Switch on main switch 1 and hold down for at least 3 sec.
  The digital display 8 indicates the current set hardness value and the salt refill indicator 6 flashes (hardness value has been set to 4 at the factory).
- To change the setting: Rotate the programme selector 3.
  You can select a set value between 0 and 7 according to the hardness of your water.
- Switch off the main switch 1.
  The chosen setting has now been stored.

Note

If you use the detergent and rinse aid separately or switch from combined detergents to standard cleaning products, ensure that the rinse aid refill indicator has been switched on and the water softening system has been set to the correct water hardness.

Programme overview

This overview lists the max. possible number of programmes. The programmes supplied with your appliance are indicated on the fascia.

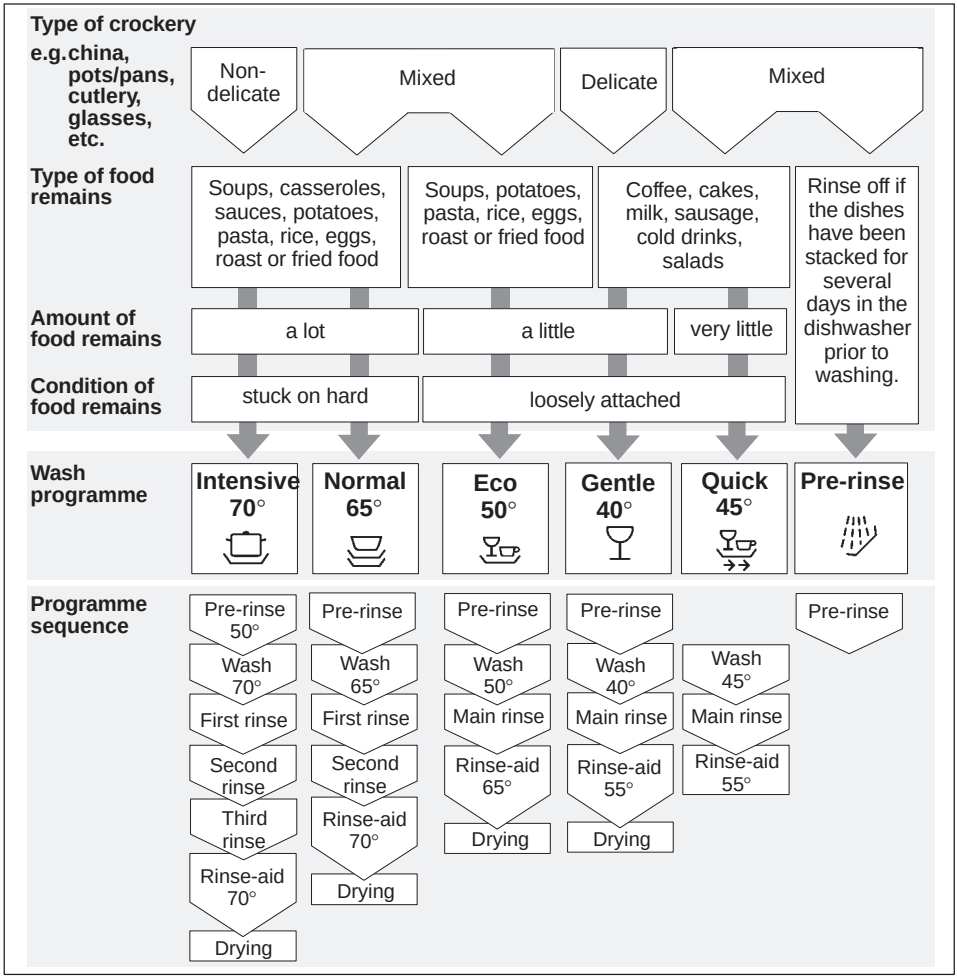

Programme selection

The most appropriate programme can be identified by comparing the type of crockery, cutlery, etc., as well as the amount and condition of food remains, with the details contained in the programme overview.

You will find the appropriate programme information in the introduction.

Washing dishes

Reduce costs!

If only a small number of dishes have been loaded into the dishwasher, selecting a programme that operates at the next lowest temperature will usually suffice.

Programme specifications

The programme specifications can be found in the summary of instructions. Programme specifications refer to normal conditions. Greater deviations may occur due to:

- varying amounts of dishes
- water supply temperature
- water pipe pressure
- ambient temperature
- mains voltage tolerances
- and the tolerances specific to the appliance (e.g. temperature, amount of water, etc.)

The water consumption values refer to a set water hardness value of 4.

Aqua sensor *

* on applicable models

The Aqua sensor is an optical measuring device which measures the turbidity of the rinsing water. A light barrier can detect dissolved food remnants in the water, e.g. egg, fat and oats.

The Aqua sensor is used according to the programme. When the Aqua sensor is active, ”clean” rinsing water may be transferred into the next rinsing bath and/or the temperature adjusted. If the turbidity is greater, the water is drained and is replaced with fresh water. In this way the water consumption is reduced by approx. 4 litres for utensils which are ”less” dirty.

Switching on the appliance

- Close the door.
- Turn on the tap fully.
- Rotate programme selector 3 to the required programme.
- Switch on the main switch 1.
- The expected programme duration is indicated on the numerical display 8.
- The programme sequence starts automatically.

Remaining running time display

When the appliance has started, the expected programme running time is displayed. The programmed running time is affected by the water temperature, the number of dishes, as well as the degree of soiling. If these conditions are changed, the running time (depending on the selected programme) can vary greatly. As the effect is not detected until a programme is running, the time may be longer or shorter than expected.

End of programme

The programme has ended when a figure 0 appears in the numerical display 8.

Switching the dishwasher OFF

Several minutes after the programme has ended:

- Set the main switch 1 to OFF.
- Turn the water tap off. (Does not apply when Aqua-Stop unit has been fitted)
- Remove dishes, etc. when they have cooled down.

Interrupting the programme

- Set main switch 1 to OFF.
- Indicator lights extinguish. The programme is retained in the dishwasher memory.

If the hot water was switched ON or the appliance has already heated up and then the appliance door opened, leave the door ajar for several minutes and then close. Otherwise, the appliance door may fly open due to expansion.

- In order to continue with the stored programme, set the main switch to ON again.

Terminating the programme (Reset)

- Only when the main switch is on: Rotate programme selector to the Reset position. The digital display indicates 0 after approx. 3 sec.
- The programme sequence lasts approx. 1 min.
- When the programme has run, switch off the main switch 1.

To restart, rotate the programme selector 3 to the required programme. Switch on the main switch 1. The programme sequence starts automatically.

Changing the programme

It is possible to change the programme within 2 minutes after you have switched the dishwasher on.

Should it be necessary to change the programme after this period, the programme cycle that has already been begun (e.g. washing) will be completed first of all.

The new remaining time displayed is the sum of the remaining time from the preceding programme cycle and the remaining time attributable to the new programme that has been selected.

Intensive drying

By activating the “Intensive drying” function, the final rinse will produce a higher temperature in all programmes resulting in an improved drying result (please note that higher temperatures might have an effect on delicate items).

- Close the door.
- Hold down button B and switch on main switch 1.
- Release both buttons. The digital display 8 indicates 1 (on) or 0 (off) and button B flashes.
- To change the setting, press button B.
- Switch off the main switch 1; the chosen setting has now been stored.

Additional functions

* on some models additional functions 4 can be set with the buttons.

Pre-Soak *

The Pre-Soak programme option serves to perform a pre-soak cycle before the main programme. This cycle enables cookware, e.g. pans, bowls, etc. to be pre-soaked and pre-rinsed in the lower rack. If you wish to pre-soak the dishes, this programme option must be selected by pressing the “Pre-Soak” button before the programme starts. The recommended detergent amount is approx. 5 g poured onto the inside of the door.

Time reduction/ time saving *

Pressing the “Time reduction/time saving” button provides a short wash cycle by curtailing the drying phase and the washing time. The washing and drying performance will be reduced with the Time reduction/time saving programme option.

Washing contents of UPPER RACK only *

If you have a small number of dishes to wash in the upper rack (e.g. glasses, cups, plates), switch on the UPPER RACK function. If you select the UPPER RACK function, the lower rack must be empty. Add a reduced amount of detergent compared to that which is recommended for a full load.

Washing contents of LOWER RACK only *

If you have a small number of dishes to wash in the lower rack (e.g. plates, pans, bowls), switch on the LOWER RACK function. If you select the LOWER RACK function, the upper rack must be empty. Add a reduced amount of detergent compared to that which is recommended for a full load.

Time delay *

h.

You can delay the start of the programme in 1-hour steps up to 19 hours.

- Switch on the appliance.
- Press the timer programming button until the digital display 8 jumps to 1h .
- Keep pressing the timer programming button until the required time is displayed.
- To delete the timer programming, keep pressing the button until 0h is displayed.
  You can change your programme selection at any time until the programme starts.

Maintenance and care

A regular inspection and maintenance of your machine will help to prevent faults. This saves time and prevents problems. Therefore you should occasionally have a careful look inside your dishwasher.

Overall condition of the machine

– Check spray arm for grease and limescale deposits.

If you find such deposits:

– Fill the detergent dispenser with detergent, start the appliance without utensils in the programme which has the highest wash temperature.

Clean the appliance with detergents/ appliance cleaners which are particularly suitable for use with dishwashers.

– Regularly wipe the door seal with a damp cloth to remove deposits.

Never use a steam cleaner to clean your dishwasher. The manufacturer is not liable for any consequential damage.

Attention!

Never use other chlorinated household detergents! Health hazard!

Special dishwasher salt

– Check the LOW SALT indicator 6. Top up with salt, if required.

Rinse-aid

– Check the LOW RINSE-AID indicator 7 on the front panel or the level indicator on the rinse-aid container 29. Top up with rinse-aid, if required.

Filters

The filters 25 prevent larger remnants of food or other objects from getting inside the pump. This residue can occasionally clog up the filters.

The filter system consists of a filter cylinder, a flat fine filter and, depending on the model, a microfilter (*).

– Inspect the filters for obstructions every time the dishwasher has been used.

– By unscrewing the filter cylinder, you can remove the filter system. Remove any food remnants and clean the filters under running water.

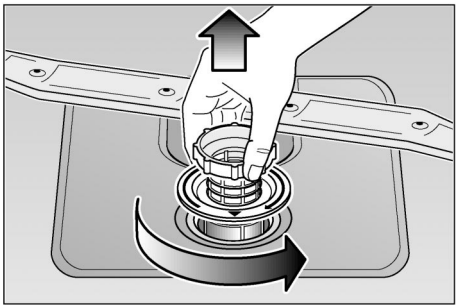

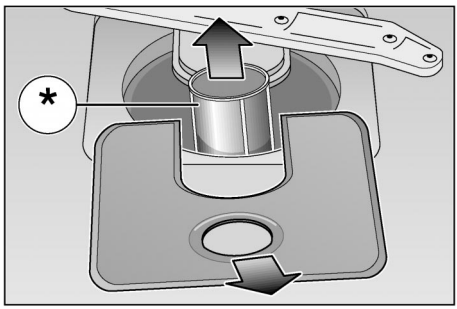

- Reassembly:
  Insert the filter system and screw down with the filter cylinder.

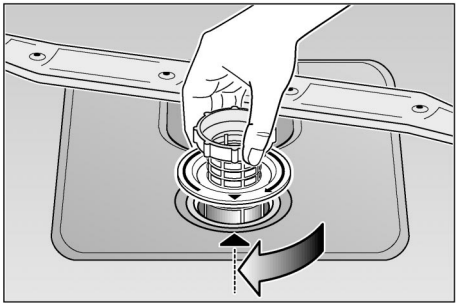

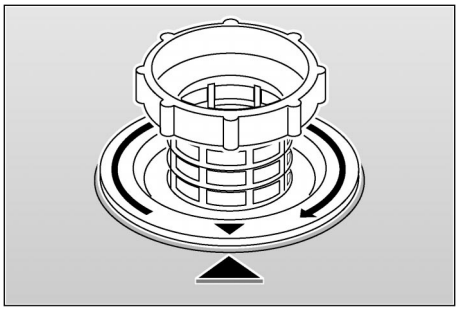

Spray arms

Lime and remnants of food in the washing water can block the nozzles in the spray arms 22 and 23 and the arm mountings .

- Inspect the nozzles in the spray arms for blocked holes due to remnants of food.
- If necessary, pull the lower arm 23 upwards and lift it off.
- Unscrew the upper spray arm 22 .
- Clean both spray arms under running water.

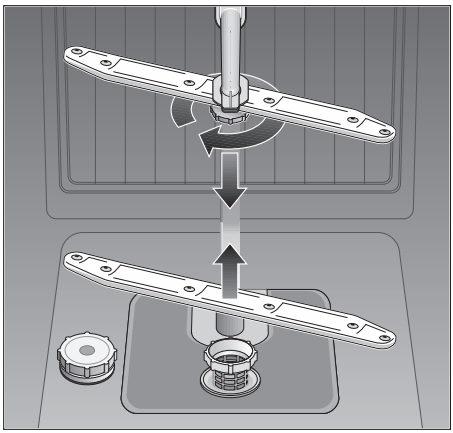

- Refit the spray arms. Ensure that the lower arm has locked into place and the upper one is screwed tight.

Pump *

* on applicable models

Larger remnants of food that have not been trapped by the filters and have been left in the water can cause a blockage in the pump. The water is no longer pumped out of the dishwasher and it can be seen covering the filter.
Proceed as follows:

- First, always disconnect the appliance from the power supply.
- Ladle out as much water as possible.
- Remove the filters 25.
- Undo the screw in the cover (Torx T 20) and remove the cover.
- Inspect the inside and remove any obstructions that you find.
- Re-insert the cover and screw down.
- Re-insert the filters and screw down.

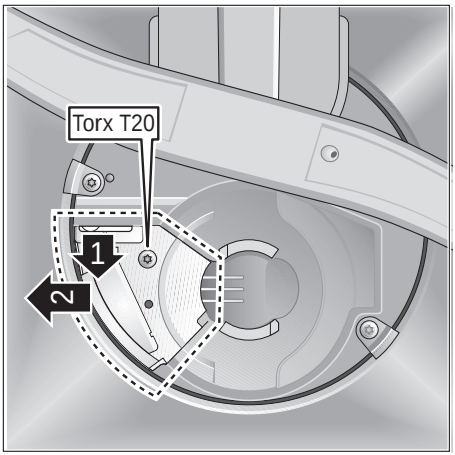

Fault finding

Resolving minor problems yourself

Experience has shown that you can resolve most problems that arise during normal daily usage yourself, without having to call out a service engineer. Not only does this save costs, but it also means that the appliance is available for use again that much sooner. The following list of common occurrences and their remedies should help you identify the causes of most problems.

Problems ...

Attention

Remember: Repairs may be carried out by a technician only.
If a component has to be replaced, ensure that only original spare parts are used. Improper repairs or use of non-original spare parts may cause considerable damage and put the user at considerable risk.

... when the appliance is switched on

- **The appliance does not start.**
  - The mains fuse has tripped.
  - The appliance plug has not been inserted.
  - The appliance door has not been shut properly.
  - The tap has not been turned on.
  - The filter on the water supply hose is blocked.
    Switch off the appliance and pull out the mains plug. Turn off the tap. Then clean the filter which is situated at the connection of the supply hose. Finally, restore the power, turn on the tap and switch on the appliance.

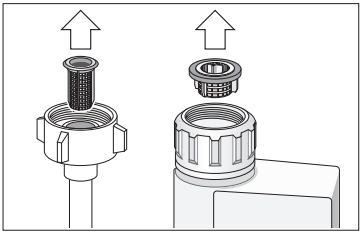

... with the appliance itself

- **Lower spray arm rotates with difficulty**
  - Spray arm is blocked by small items or food remains.
- **Lid in detergent compartment cannot be closed**
  - Detergent compartment has been overfilled.
  - Mechanism is clogged with remnants of detergent.
    Indicator lamps do not extinguish after washing has finished.
- **Indicator lights flash after the programme has started.**
  - No programme selected.
- **Remnants of detergent stuck inside dispenser**
  - Compartment was damp when it was filled up with detergent. Compartment must be dry before detergent is added.
- **Indicator lamps do not extinguish after washing has finished**
  - Main switch is still set to ON.
- **Refill display does not light up.**
  - Rinse aid refill indicator switched off. (see auto 3in1 chapter)
  - Salt refill indicator switched off. (see auto 3in1 chapter)
- **Water remains inside appliance after programme has ended**
  - Blockage or kink in drainage hose.
  - Pump is jammed.
  - Filters are blocked.
  - The programme is still running. Wait for the programme to end (numerical display will indicate 0).
  - Perform “Reset” function.

... during washing

- **Unusual amount of foam is created**
  - Normal washing up liquid has been poured into the rinse-aid container.
  - Remove any spilled rinse aid with a cloth as it could otherwise lead to excessive foaming during the next washing cycle.
- **Appliance stops suddenly while washing is taking place**
  - Cut in electricity supply to appliance.
  - Water supply has been interrupted.
- **Knocking sound can be heard while washing is taking place**
  - A spray arm is knocking against the dishes inside the appliance.

- **Rattling sound can be heard while washing is taking place**
  - Crockery has not been stacked properly inside the appliance.
- **Knocking sound coming from inlet valves**
  - This is caused by the way the water pipes have been laid and it has no effect upon the way the appliance functions. There is no remedy for this.

... with the dishes, cutlery, etc.

- **Remnants of food are stuck to the dishes, cutlery, etc.**
  - Dishwasher was not loaded properly. Jets of water could not reach all parts of the dishes, etc.
  - Too many items in the rack.
  - Items in the rack were touching each other.
  - Not enough detergent was added to dispenser.
  - Selected wash programme was not intensive enough.
  - Rotation of spray arm was obstructed by dish, etc.
  - Nozzles in spray arm are blocked by remnants of food.
  - Filters are blocked.
  - Filters have been incorrectly fitted.
  - Waste-water pump is jammed.
- **Plastic items are discoloured**
  - Not enough detergent was added to dispenser.
- **White stains are left on crockery, glasses have a milky appearance**
  - Not enough detergent was added to input compartment.
  - Amount of rinse-aid was set too low.
  - Although water is quite hard, no salt has been put in appliance.
  - Water softener was set too low.
  - Lid on salt container is not screwed tight.
  - If you used a phosphate-free detergent, try a detergent containing phosphates and compare results.
- **Dishes, cutlery, etc. have not been dried**
  - Selected programme did not include drying function.
  - Amount of rinse-aid was set too low.
  - Items were removed from dishwasher too soon.
- **Glasses have a dull appearance**
  - Amount of rinse-aid was set too low.
- **Tea stains or traces of lipstick have not been completely removed**
  - Detergent does not have a sufficient bleaching effect.
  - Washing temperature was set too low.
- **Traces of rust on cutlery**
  - Cutlery is not sufficiently rustproof.
  - Salt content in washing water is too high.
    - Lid on salt container is not screwed tight.
    - Too much salt was spilt while filling container.

- **Glasses become clouded and discoloured; coating cannot be wiped off**
  - Unsuitable detergent was used.
  - Glasses are not dishwasher-proof.
- **Smears left behind on glasses and cutlery; glasses have acquired a metallic appearance**
  - Amount of rinse-aid set too high.

Customer Service

Please call your local service agent, if you are not able to resolve any problem yourself. The name of your nearest service agent is shown in the Customer Service address list. When you call, please provide details of the model number (1) and the production (FD) number (2) which are shown on the nameplate 31 on the appliance door.

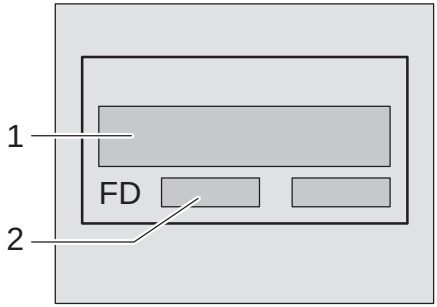

Warning

Please note that a visit by the customer service technician in the event of a fault or one of the problems previously discussed is not free of charge even during the warranty period.

Information

Notes on comparison tests

You will find details of the conditions for the comparison tests on the additional ”Notes on comparison tests” sheet. The consumption values for the relevant programmes are given in the introduction.

General

- Built-under and integrated appliances which are subsequently installed as free-standing appliances must be secured to prevent them from falling over, e.g. by screwing them to the wall or by installing them under a continuous worktop which is screwed to the adjoining units.
- For Swiss version only:
  The appliance can be installed without difficulty between wooden and plastic walls in a kitchen range. If the appliance is not connected via a plug, the installation side must feature an all-pole disconnector with a contact gap of at least 3 mm in order to satisfy the relevant safety regulations.

Installation

The dishwasher must be connected by a qualified technician to ensure correct operation. The specifications for supply, drainage and connected load must fulfil the required criteria as stated in the following paragraphs or in the installation instructions.

Install the appliance in the following sequence:
– Check the delivery
– Install the appliance
– Connect the waste water
– Connect the fresh water
– Connect the power supply

Delivery

Your dishwasher was checked at the factory to ensure that it was in perfect working order. This may have left some small water stains in the dishwasher. These will disappear after the first rinse cycle.

Installation

The required installation dimensions can be found in the installation instructions. Using the height-adjustable feet, adjust the appliance until it is level. Ensure that the appliance is standing firmly.

Waste water connection

See the installation instructions for the required connection steps. If required, attach a siphon with drainage spigot. Using the enclosed parts, connect the waste water hose to the drainage spigot of the siphon.
Ensure that the drainage hose is not kinked, crushed or twisted (ensure that there is no sealing cover which prevents the waster water from flowing away!).

Fresh water connection

Using the enclosed parts, connect the fresh water connection to the tap according to the installation instructions. Ensure that the fresh water connection is not kinked, crushed or twisted.

When replacing the appliance, always connect a new water supply hose to the water supply. The old supply hose must not be re-used.

Water pressure:

Minimum 0,05 MPa (0,5 bar) – maximum 1 MPa (10 bar).
If the water pressure is higher, install a pressure reducing valve.

Flow rate:

Minimum of 10 litres per minute.

Water temperature:

We recommend that you use cold water. If you do use hot water, the temperature should not exceed 60 °C.

Electrical connection

Connect the appliance only to 230 V alternating current via a correctly installed socket with protective conductor.
See rating plate for required fusing 31 .
The socket must be attached near the dishwasher and be freely accessible.
The connection may be modified by an electrician only.

Use only a residual-current-operated circuit-breaker which features the symbol. Only this circuit breaker guarantees compliance with the currently valid regulations.

Removing the appliance

It is essential, when removing the appliance, to observe the following sequence: First, disconnect the appliance from the power supply.
Pull out the mains plug.
Turn off the water supply.
Disconnect the waste water and fresh water connections.
Loosen the fastening screws under the worktop. If fitted, remove the base panel.
Pull out the appliance, carefully pulling the hose behind.

Transporting the dishwasher

Drain water from the dishwasher. Secure all loose parts. The appliance should only be transported in an upright position.

- If the appliance is not kept upright during transport, any water left inside may seep into the control module and cause subsequent errors with programme functions.
- Drain the appliance according to the following steps:
  - Turn on the tap.
  - Close the door.
  - Select ECO programme.
  - Switch on the main switch. The programme duration is indicated in minutes on the numerical display.
  - Wait until approx. 4 minutes have elapsed.
  - Rotate programme selector to the Reset position.
  - The digital display switches to 0 .
  - After another minute switch off the appliance.
  - Turn off the tap.

Protection from freezing temperatures

If the appliance is installed in a location where there is a risk of freezing temperatures (e.g. in a holiday home), all water must be completely drained out of the interior (see “Transporting the dishwasher”).

Turn OFF the tap, disconnect the supply hose and allow to drain.

Waste disposal

Disposal

Old appliances are not worthless rubbish. Valuable raw materials can be reclaimed by recycling old appliances.

Pull out the mains plug of the redundant appliance. Cut off the power cord and discard with mains plug.
To prevent children from locking themselves in the appliance and suffocating, destroy the door lock and childproof lock (if fitted).

You received your new appliance in a protective shipping carton. All packaging materials are environmentally friendly and recyclable.
Please contribute to a better environment by disposing of packaging materials in an environmentally-friendly manner. All plastic parts of the appliance are identified by internationally standardised symbols (e.g. >PS< polystyrene).
When the appliance is being disposed of, the plastic waste can be sorted for environmentally-friendly recycling.

Please ask your dealer or inquire at your local authority about current means of disposal.

Disposal of the packaging

– Please dispose of the packaging material in an environmentally friendly manner.
  Keep children away from shipping carton and packaging components. Danger of suffocation from folding cartons and plastic film.
  - Corrugated cardboard consists mainly of wastepaper.
  - The moulded polystyrene parts do not contain any chlorofluorohydrocarbons.
  - The polyethylene film (PE) consists partly of secondary raw materials.
  - The wooden frames (if fitted) are made of untreated residual wood.
  - The hoops (if fitted) consist of polypropylene (PP).

Disposal of redundant appliances

– Make redundant appliances unusable to prevent subsequent accidents.
– Dispose of the appliance in an environmentally friendly manner.

Warning

Children could become locked in the appliance (risk of suffocation) or find themselves in other dangerous situations. Therefore: Pull out the mains plug, sever and dispose of the power cord.
Destroy the door lock so that the door can no longer be closed.

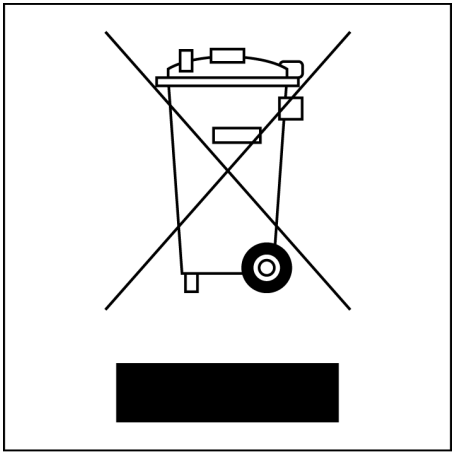

This appliance is labelled in accordance with European Directive 2002/96/EG concerning used electrical and electronic appliances (waste electrical and electronic equipment – WEEE). The guideline determines the framework for the return and recycling of used appliances as applicable throughout the EU.

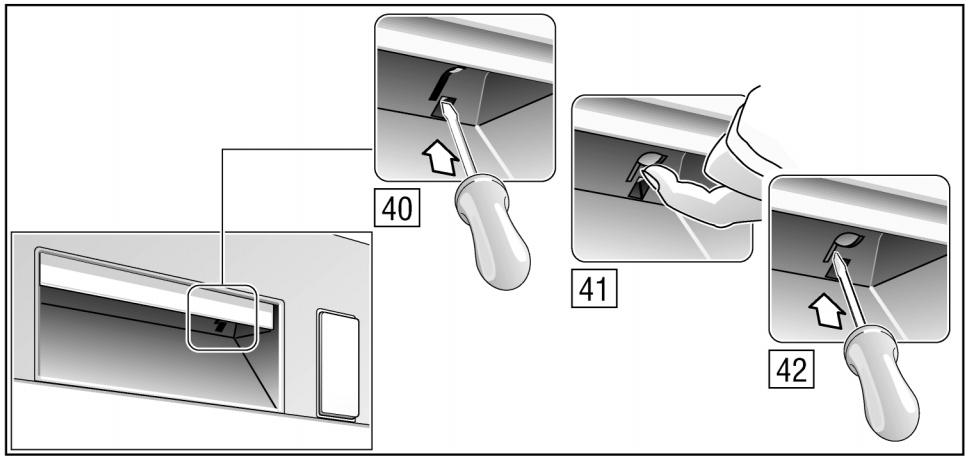
40
41
42

AQUA-STOP Warranty.

(not applicable to appliances without Aqua-Stop)

In addition to warranty claims against the seller based on the sales agreement and in addition to our appliance warranty we shall replace the appliance under the following conditions:

1. If damage is caused by water due to a malfunction of our Aqua-Stop system, we shall make good the damage in the case of private consumers.
2. This liability warranty is valid for the service life of the appliance.
3. The warranty claim is subject to correct installation and connection of the appliance in accordance with our instructions. “This also includes correct installation of the Aqua-Stop extension (original accessory).” Our warranty does not cover defective supply lines or fittings up to the Aqua-Stop connection on the tap.
4. In principle, it is not necessary to monitor an appliance fitted with Aqua-Stop during operation or to secure it afterwards by turning off the tap. You should only turn off the tap if you are absent from home for a prolonged period, e.g. on holiday for several weeks.

Robert Bosch Hausgeräte GmbH
Carl–Wery–Straße 34
81739 München

To contact us directly, use the tel. no or fax no. in the enclosed customer service list.

Bosch Info–Team:
DE Tel. 0180 / 5 30 40 50 (EUR 0,12/Min. DTAG)
AT Tel. 0660 / 59 95

Internet:
http://www.bosch–hausgeraete.de

9000 044 386 en (8409)
630 N