Household Appliances

9000 009 311 (8402)

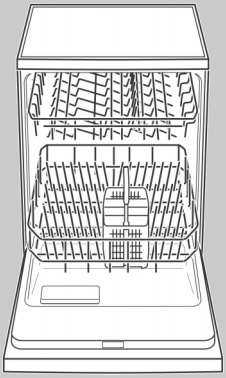

en Instructions for Use

Internet:http://www.bosch-hausgeraete.de
Bosch Info-Team: DE Tel. 01 80/5 30 40 50 (EUR 0,12/Min. DTAG)

BOSCH

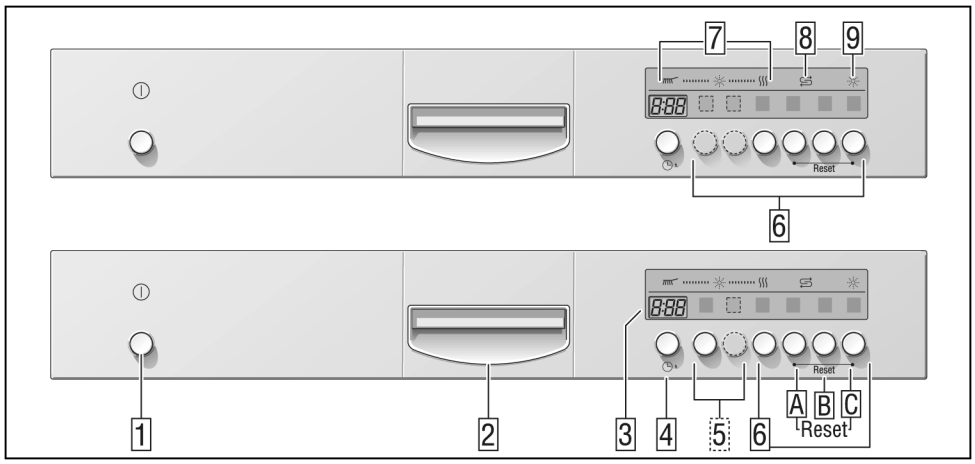
7
8
9
6
Reset
1
2
3
4
5
6
A
B
C
Reset

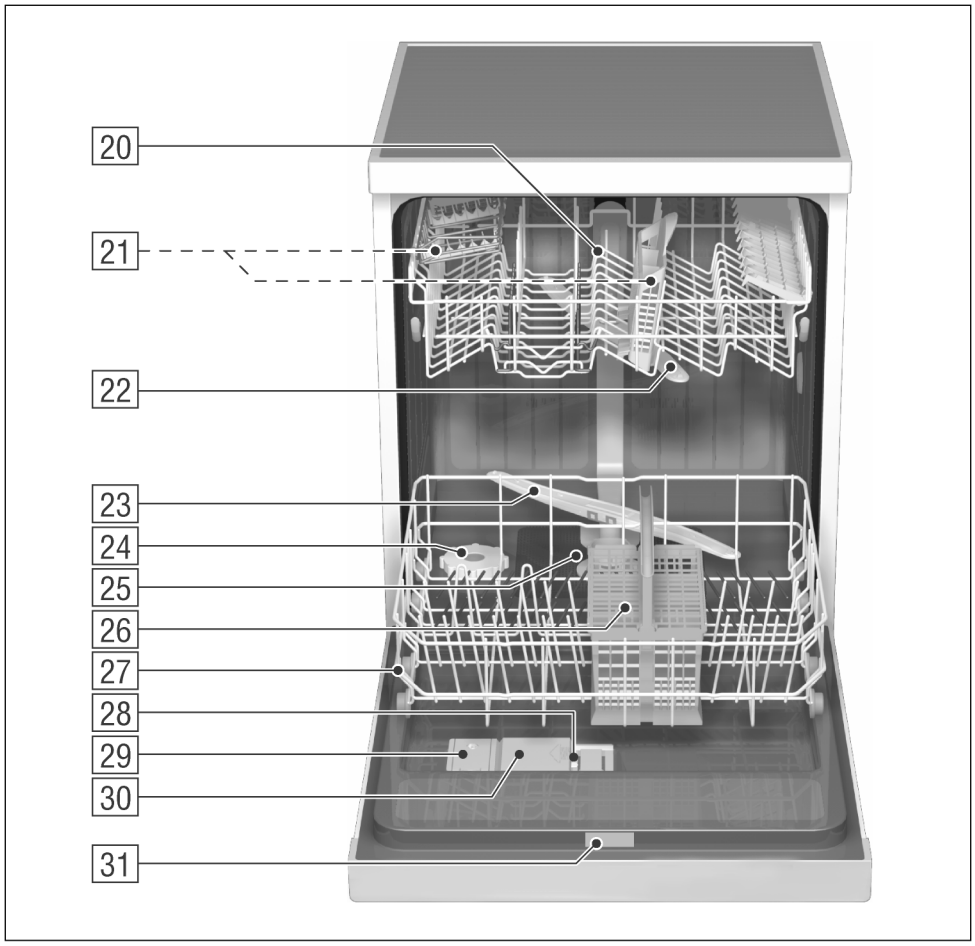
20
21
22
23
24
25
26
27
28
29
30
31

en

Index

Safety instructions 4
Getting to know your appliance . . 6
Water softener 7
Filling the special salt container . . 8
Filling the rinse-aid container 9
Unsuitable dishes 10
Arranging crockery, glasses, etc. in the dishwasher 11
Detergents 15
auto 3in1 16
Programme overview 18
Washing dishes 19
Additional functions * 21
Maintenance and care 22
Fault finding 24
Customer Service 26
Information 27
Installation 28

Safety instructions

Delivery

- Immediately check the packaging and dishwasher for any damage which may have been caused in transit. Do not use a damaged appliance, but consult your supplier.
- Please dispose of packaging material properly.
- The corrugated cardboard consists mainly of waste paper.
- The polystyrene moulded parts have been foamed without any CFCs.
- The polyethylene film (PE) consists partly of secondary raw material.
- The wooden frames (if fitted) are made of residual wood and are untreated.
- The hoops (if fitted) consist of polypropylene (PP).

Installation

- Install and connect the appliance according to the installation and assembly instructions.
- The dishwasher must NOT be connected to the power supply during installation.
- Ensure that the protective conductor system of the domestic electricity supply has been installed correctly.
- Electrical connection conditions must correspond with the specifications on the rating plate of the dishwasher.
- Built-under and built-in appliances should always be installed under a continuous work surface which is attached to the adjacent cupboards, in order to ensure that the appliance is entirely stable.
- After the appliance has been installed, the mains plug should still be easily accessible.
- Not on all models:
  The plastic housing on the water input contains an electrically operated valve. The connecting wires are inside the inlet hose. Do not cut through this hose and do not immerse the plastic housing in water.

Warning

For safety reasons, if the appliance is not fitted in a recess, thereby making a side wall accessible, the door hinge area should be covered at the side.
(Risk of injury)
Covers are available as optional accessories from customer services or specialist stores.

In daily use

Warning

Knives and other utensils with sharp points must be placed in the baskets either flat or with the points downwards.

- Use the dishwasher only in the household and only for its designed purpose, i.e. for washing domestic dishes.
- Do not lean or sit on the open door. The appliance could tip.
- The water in the appliance is not drinking water.
- Do not add any solvents to the washing chamber. Danger of explosion!
- Open the door carefully when the programme is still running. Water could spray out of the appliance.
- Read and observe the safety information and instructions for use on the packaging for cleaning and rinsing agents.

Children in the household

- Do not let infants play or operate the dishwasher.
- Keep cleaning and rinsing agents out of the reach of infants.
- Keep infants away from the open dishwasher. It could contain residue of the cleaning agent.

Child lock *

* on applicable models

Please refer to the drawings enclosed in the envelope

40 Engaging the child lock

41 Opening the door with the child lock engaged

42 Disengaging the child lock

Warning

To prevent injuries, e.g. caused by stumbling, open the dishwasher only briefly in order to load and unload the dishwasher.

If a fault occurs

- Repairs or other work on the dishwasher should only be carried out by a qualified specialist.
- The dishwasher must be disconnected from the electricity supply before any repairs or other work are started. Pull the mains plug out of the wall socket or switch off at the fuse box. Grasp the plug to remove it from the socket; do not tug on the cable. Turn the water off at the tap.

When disposing of old appliances

- Appliances that have reached the end of their service life should be rendered inoperable in order to exclude the possibility of subsequent accidents. Pull the mains plug out of the wall socket, cut through the connecting cable and disable the door lock.
- Take the appliance to a designated waste disposal centre.

Warning

Children could get locked in the appliance (risk of suffocation) or get stuck in other positions.
Therefore: Remove the mains plug, cut the mains wire and set aside. Damage the door lock so that the door can no longer be closed.

Getting to know your appliance

Diagrams of the control panel and the interior of the appliance can be found in the envelope at the front.
Individual positions are referred to in the text.

Control panel

1 Main switch
2 Door opener
3 Digital display
4 Time delay
5 Additional options *
6 Programme buttons
7 Programme sequence indicator
8 Salt refill indicator
9 Rinse-aid refill indicator

Appliance interior

20 Upper basket with 2-tiered cup rack
21 Additional cutlery basket for the top basket *
22 Upper spray arm
23 Lower spray arm
24 Container for special salt with level indicator *
25 Filters
26 Cutlery basket
27 Lower basket
28 Locking mechanism
29 Container for rinse-aid, with level indicator
30 Detergent compartment
31 Nameplate

* not on all models

You will need to purchase the following before using the dishwasher for the first time:

– special salt for use in dishwashers
– detergent
– rinse-aid

Only use products, which are suitable for dishwashers.

Water softener

In order to rinse dishes and glasses satisfactorily, the dishwasher requires soft water, i.e. containing little or no lime, otherwise water stains will be left behind on crockery and glasses, etc.
If the tap water exceeds a certain level of hardness, it must be softened, i.e. decalcified, so that it can be used in the dishwasher.
This is achieved by adding a special salt to the water softener inside the dishwasher.
The water softener, that is the required amount of salt, is set up according to how hard the tap water is.

Setting up the water softener

- Determine the level of hardness of your tap water. Your local water company or service agent can help you with this.
- Identify setting from the following water hardness table.

Water hardness table

°dH	°fH	°Clarke	mmol/l	
0 - 6	0-11	0-8	0 - 1,1	H:00
7 - 8	12-15	9-10	1,2-1,4	H:01
9 - 10	16-17	11-12	1,5-1,8	H:02
11-12	18-21	13-15	1,9-2,1	H:03
13-16	22-29	16-20	2,2-2,9	H:04
17-21	30-37	21-26	3,0-3,7	H:05
22-30	38-54	27-38	3,8-5,4	H:06
31-50	55-89	39-62	5,5-8,9	H:07

- Close the door.
- Hold down programme button B and press 1 main switch until the digital display illuminates, then release the buttons.
  The LED for button B flashes and the digital display displays the factory setting H:04.

  To change the setting,
  press programme button B .

  Each time the button is pressed, the set value increases by 1; after H:07, the setting goes back to H:00.
- Switch off the main switch 1. The chosen setting has now been stored.

Filling the special salt container

How the salt works

While washing is taking place, salt is automatically rinsed out of the salt container into the water softener where it dissolves the lime in the water.
The dissolved lime is pumped out of the dishwasher. The water softening system is then ready for the next load.
This process of regeneration can only function when the salt is dissolved in water.

Unscrew the lid on the salt container 24 .

Before you use the dishwasher for the first time, pour approx. 1 litre of water into the salt container.

Use the enclosed salt filler.

Refill with salt (**do not use edible salt**) until the salt dispenser is full (max. 1.5 kg). When the salt dispenser is being refilled, water is displaced and drains away. Therefore always refill the salt dispenser immediately before switching on the dishwasher (to prevent corrosion). As a result, the overflowing salt solution will be immediately diluted and rinsed out. Then remove salt residue from the filler area and screw on the dispenser cover, ensuring that it is not fitted askew.

The LOW SALT indicator 8 on the front panel will light up initially but will extinguish again after a short period when the salt solution has become sufficiently concentrated.

Note

When the control is set to H:00, it is not necessary to fill up with salt as none will be consumed while the dishwasher is operating. The LOW SALT indicator is switched off. If the control is set between H:01 and H:07, then salt must be added to the dispenser.

Do not pour detergent into the container for special salt. This would destroy the water softener.

Salt refill indicator

As soon as the salt refill indicator 8 is lit on the control panel, refill with salt immediately before the next rinse cycle.

Filling the rinse-aid container

The purpose of a rinse-aid is to prevent the formation of water marks on tableware and utensils, and to ensure that glasses are clean and sparkling. The rinse-aid is consumed during the washing process.

- Fold back the lid on the rinse-aid container 29 .

  To open the lid, press the mark ⬇ on the rinse-aid lid and simultaneously lift the lid off the lug ⬆.

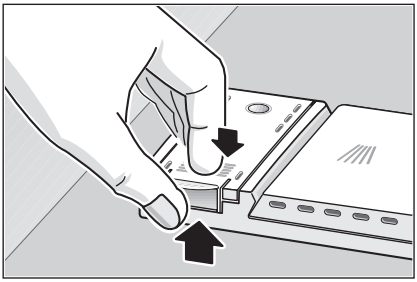

- Pour the rinse-aid into the filler hole until the level indicator turns dark.
- Close the lid, ensuring that you hear it snap closed.

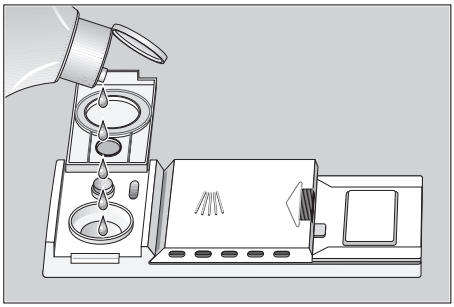

Note

Use only rinse aid for domestic dishwashers. Spilt rinse aid may result in excessive foam formation in the next rinse cycle. Therefore, remove any spilt rinse aid with a cloth.

Adjusting the amount of rinse-aid

The amount of rinse-aid added to the water can be varied by adjusting the stepless control. The rinse-aid control has been set to ”4” in the factory.

Do not alter the setting of the rinse-aid control unless streaks (turn knob towards ”–”) or water marks (turn knob towards ”+”) are left on the dishes.

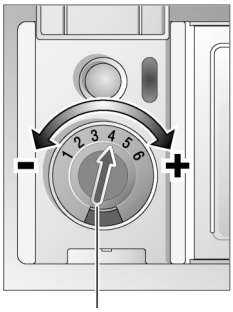

29

rinse–aid control

Low rinse-aid indicator

As long as the rinse-aid refill indicator on the panel 9 (on applicable models) or dispenser 29 has not illuminated, there is sufficient rinse-aid in the dishwasher.

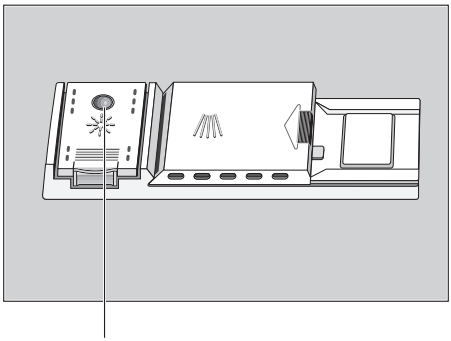

LOW RINSE-AID indicator

Switching the rinse-aid indicator on or off

You can switch the rinse-aid indicator 9 on or off. This function can be changed as follows:

- Close the door.
- Hold down programme button 4 and press main switch 1 until the digital display illuminates, then release the buttons.
  On the digital display 3 1:01 is indicated (rinse-aid indicator on).
- By pressing the programme button 4 you can switch the rinse-aid indicator off 1:00 or on 1:01.
- Switch off the main switch 1; the chosen setting has now been stored.

Note

Do not switch off the rinse-aid indicator unless you are using detergent products with an integrated rinse-aid!

Unsuitable dishes

You should not clean the following items in your dishwasher:

- Cutlery and dishes made of wood. They will leach out and become unsightly; the utilised adhesives are also not suitable for the dishwasher temperatures.
- Delicate décor glasses, craft dishes and vases, special antique or irreplaceable dishes. These décor items are not dishwasher-safe.

Plastic parts, copper and tin dishes sensitive to hot water are not suitable either. Overglazed patterns, aluminium and silver parts tend to become discoloured and fade during the rinsing cycle. Even some types of glass (e.g. crystal glass objects) may become cloudy after many rinse cycles. Completely absorbent materials, such as sponges and cloths must not be cleaned in the dishwasher either.

Recommendation:

In future buy only dishes which are identified as dishwasher-safe.

Note

Dishes which are soiled with ash, wax, lubricating grease or ink must not be cleaned in the dishwasher.

Damage to glassware and other dishes

Possible causes:

- type of glass or manufacturing process
- chemical composition of detergent
- water temperature and duration of dishwasher programme.

Suggested remedy:

- Use glassware or porcelain dishes that have been marked ’dishwasher–proof’ by the manufacturer.
- Use a mild detergent that is described as ’kind to dishes’. If necessary, seek further information from detergent manufacturers.
- Select a programme with as low a temperature and as short a duration as possible.
- To prevent damage, take glass and cutlery out of the dishwasher as soon as possible after the programme has ended.

Arranging crockery, glasses, etc. in the dishwasher

Loading the dishwasher

Scrape off any large amounts of left-over food. It is not necessary to rinse the dishes under running water.
Place objects in the dishwasher in such a way that

- items such as cups, glasses, pots/pans, etc. are stood upside down,
- curved items, or those with recesses, should be at a slant so that water can run off,
- they are stacked securely and cannot tip over,
- they do not prevent the spray arms from rotating while washing takes place.

Very small items should not be washed in the dishwasher as they could easily fall out of the baskets.

Removing the dishes

To prevent water dripping from the top basket onto the dishes in the lower basket, we recommend that you empty the lower basket first and then the top basket.

Cups and glasses

Upper basket 20

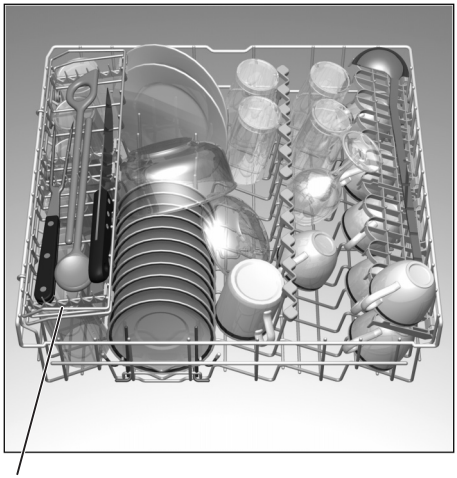

* on applicable models

Pots and pans

Lower basket 27

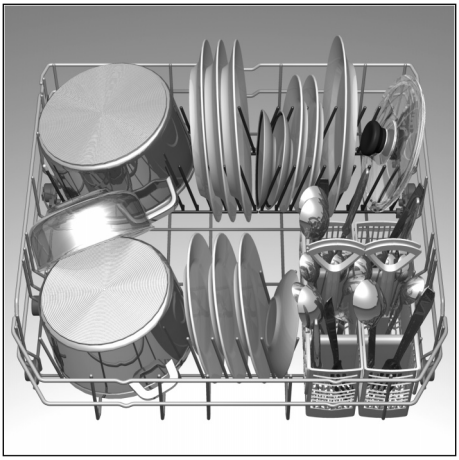

Cutlery

Cutlery should be placed in the dishwasher always unsorted and with the eating surface pointing downwards. The spray jet is then better able to reach the individual parts.

To prevent injuries, place long, pointed accessories and knives on the étagère (some models) or on the knife shelf (available as an accessory).

Folding spikes *

* on applicable models

To improve stacking of pots and pans, the spikes can be folded down.

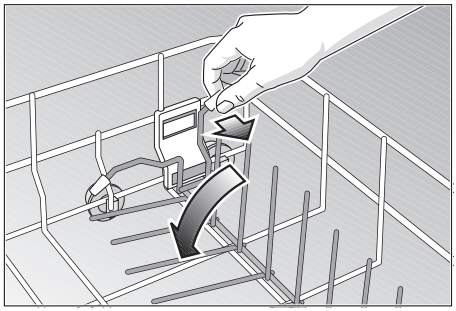

Baking sheet spray head *

* some models

You can clean large baking sheets or grilles with the baking sheet spray head. To do this, remove the top basket and insert the spray head as illustrated in the diagram.

To ensure that the spray jet can reach all parts, arrange the baking sheets as illustrated
(max. 4 baking sheets and 2 grilles).

Shelf *

* not on all models

Lean tall glasses and those with long stems against the shelf – not against other items to be washed.

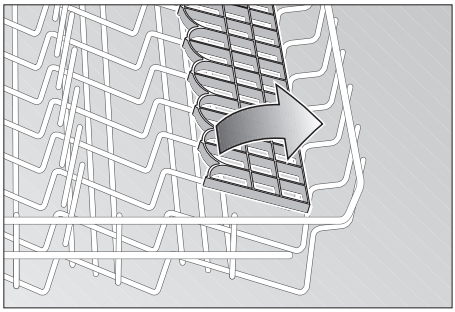

Long items, serving cutlery, salad servers or knives should be placed on the shelf so that they do not obstruct the rotation of the spray arms. The shelf can be folded back when not required for use.

Small accessories holder*

* some models

Light-weight plastic accessories, e.g. cups, lids, etc. can be held securely in the small accessories holder.

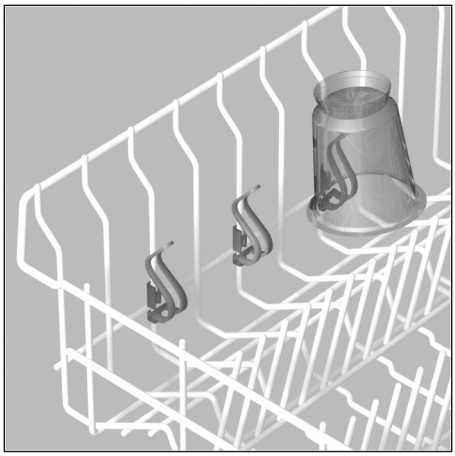

Adjusting position of basket *

* not on all models

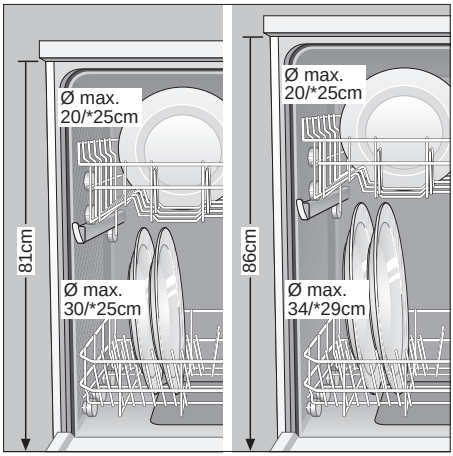

If required, the height of the top basket can be adjusted in order to create more space for large utensils either in the top or bottom basket.

Select one of the two following procedures according to the design of the top basket for your appliance model:

Top basket with upper and lower roller pairs

- Pull out the top basket.
- Remove the top basket and re-attach it to the upper or lower rollers.

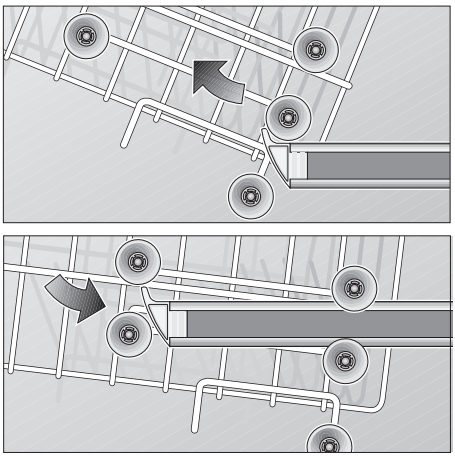

Top basket with side levers (Rackmatic)

– Pull out the top basket.

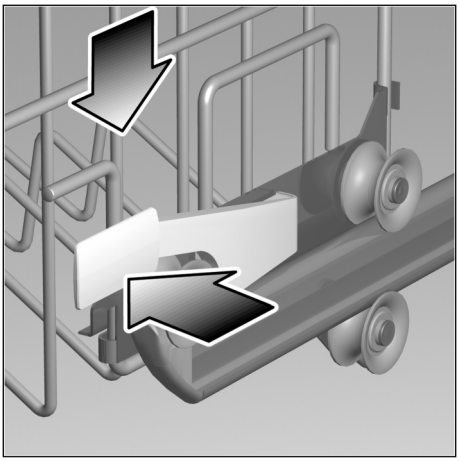

– To lower the basket, press in succession the two levers on the left and right sides of the basket. Always take hold of the side of the basket on the upper edge, otherwise the basket will not drop smoothly (and may damage the utensils).

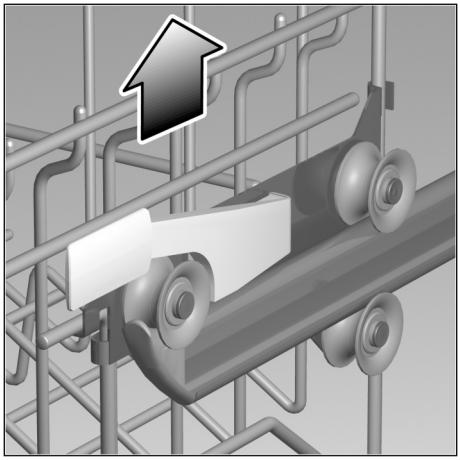

– To raise the basket, take hold of the basket on the upper edge and pull upwards.

– Before you re-insert the basket, ensure that it is at the same height on both sides. Otherwise, the appliance door cannot be closed and the upper spray arm will not connect to the water circuit.

Detergents

Information about detergents

You can use any brand of liquid or powder detergent, as well as tablets, that have been specifically designed for use in domestic dishwashers. (Do not use normal washing-up liquid!)

Nowadays there are three types of dishwasher detergent available:
1. those containing phosphates and chlorine,
2. those containing phosphates but no chlorine,
3. those containing neither phosphates nor chlorine.

When a phosphate-free detergent is used in conjunction with hard water, there is a greater possibility that white marks will be left behind on crockery and glasses, etc. These can be avoided by pouring an increased amount of detergent into the dispenser.

Chlorine-free detergents have a reduced bleaching effect. This can mean that tea stains are not completely removed or plastic items become discoloured.

This can be resolved by:
– selecting a higher temperature programme, or
– increasing the amount of detergent, or
– using a detergent that contains chlorine.

Check the label on the detergent packaging to determine whether a particular product is suitable for use with silverware.

If you have any further questions, we recommend that you contact the customer advice departments of the various detergent manufacturers.

Detergent compartment with measuring marks

The side of the detergent compartment is marked with lines to help you determine how much powder to add.
The capacity of the detergent container is 15 ml up to the bottom line and 25 ml up to the middle line. When the compartment is full it contains 40 ml.

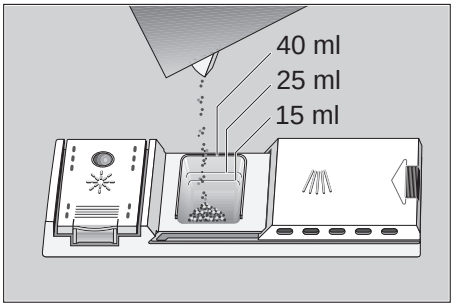

Important

If the lid on the detergent compartment is closed, press the release lever to open the flap.

Adding detergent

– Tip detergent powder into the corresponding compartment 30 .

  Please observe the manufacturer's instructions printed on the detergent packaging when determining the correct dosage.

– Due to the different solvency properties of the detergent tablets supplied by various manufacturers, the cleaning efficiency of the detergent may not be fully utilised by short programmes. It is recommended to use washing powder for these programmes.

  When you select the INTENSIVE programme, tip an extra 10–15 ml of detergent onto the inside surface of the door.

Reduce costs!

If your dishes are only moderately dirty, you may be able to use less detergent than recommended.

- Close the lid on the detergent compartment.
  Press down the lid (1) until it clicks shut (2).

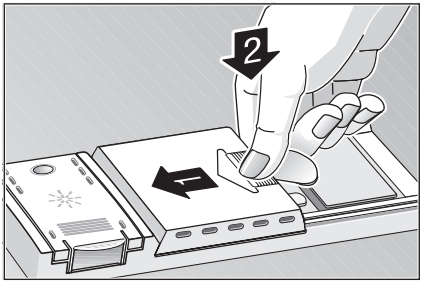

- If you are using detergent in tablet form, read the manufacturer's recommendations on the packaging in order to
  determine where the tablets should be placed inside the dishwasher (e.g. in cutlery basket, detergent compartment, etc.).
  Make sure that the lid on the detergent compartment is closed, even if you are using tablets.

auto 3in1

The use of so-called combined detergent products may make the use of rinse aid and/or salt unnecessary.

There are currently several types of combined detergent products available.

- **3in1:** They contain detergent, rinse aid **and** salt function.
- **2in1:** They contain detergent and rinse aid **or** salt function.

>>> Always check the type of detergent or combined product which you are using!

Always follow the operating instructions or the information on the packaging.

The rinse programme is automatically adjusted in order to obtain the best possible rinsing and drying result.

Observe the following important information if using combined cleaning products:

- Regeneration salt is not required up to a water hardness of 21° dH (37° fH, 26° Clarke, 3.7 mmol/l) only. No other settings on the appliance are required.
- Salt is still required if the water hardness is **above** 21° dH (37° fH, 26°Clarke, 3.7 mmol/l). Fill the salt dispenser with salt 24 and select setting 6 on the water softening system.

If in doubt, please contact the detergent manufacturer, especially if:

- the utensils are very wet at the end of the programme.
- limescale forms.

Note

Optimum rinsing and drying results can be obtained by using standard detergents in conjunction with separate application of salt and rinse aid.

Observance of the operating instructions or information on the packaging of the combined detergents determines their effectiveness.

Note

Even if the rinse aid and/or salt refill indicator is lit, the rinse programme runs correctly when 3in1 products are used.

If the rinse aid refill indicator [9] or salt refill [8] indicator is defective and you would like to switch it off, proceed as follows:

Switching the rinse aid refill indicator off and on

You can switch the rinse aid refill indicator [9] on or off. This function can be changed as follows.

- Close the door.
- Hold down the programme button [4] and press the main switch [1] until the digital display lights up, then release the buttons.
  [3] is indicated on the digital display 1 (rinse aid refill indicator on).
- By pressing the programme button [4], you can switch off 1:00 or switch on 1:01 the rinse aid indicator.
- Switch off the main switch [1]; the setting is saved.

Switching the salt refill indicator / water softening system off and on

- Close the door.
- Hold down the programme button [B] and switch on the main switch [1], then release the buttons.
  The illuminated button [B] and the factory-set value H:04 on the digital display flash.

  To change the setting: press the programme button [B] .

  Each time the button is pressed, the set value increases by one; when the value H:07 is reached, the display jumps back to H:00 (the salt refill indicator / water softening system has been switched off).
- Switch off the main switch [1].
  The set value is stored within the device.

Approx. 4 litres of water are required to regenerate the water softening system. As a result, the water consumption per rinse cycle increases by 0 to maximum 4 litres depending on the water hardness setting.

Note

If you use the detergent and rinse aid separately or switch from combined detergents to standard cleaning products, ensure that the rinse aid refill indicator has been switched on and the water softening system has been set to the correct water hardness.

Programme overview

This overview lists the max. possible number of programmes. The programmes supplied with your appliance are indicated on the fascia.

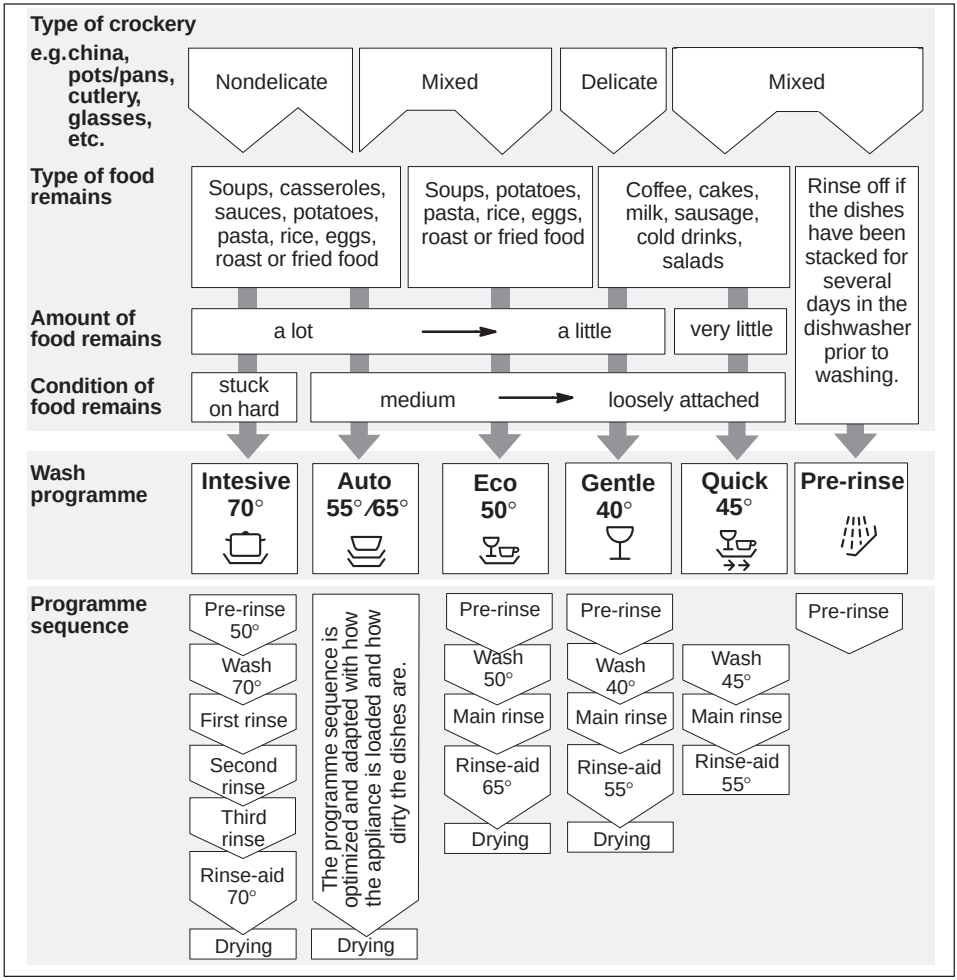

Programme selection

The most appropriate programme can be identified by comparing the type of crockery, cutlery, etc., as well as the amount and condition of food remains, with the details contained in the programme overview.

You will find the appropriate programme information in the introduction.

Washing dishes

Reduce costs!

If only a small number of dishes have been loaded into the dishwasher, selecting a programme that operates at the next lowest temperature will usually suffice.

Programme specifications

The programme specifications can be found in the summary of instructions. Programme specifications refer to normal conditions. Greater deviations may occur due to:

- varying amounts of dishes
- water supply temperature
- water pipe pressure
- ambient temperature
- mains voltage tolerances
- and the tolerances specific to the appliance (e.g. temperature, amount of water, etc.)

The water consumption values refer to a set water hardness value of 4.

Aqua sensor *

* on applicable models

The Aqua sensor is an optical measuring device which measures the turbidity of the rinsing water. A light barrier can detect dissolved food remnants in the water, e.g. egg, fat and oats.

The Aqua sensor is used according to the programme. When the Aqua sensor is active, ”clean” rinsing water may be transferred into the next rinsing bath and/or the temperature adjusted. If the turbidity is greater, the water is drained and is replaced with fresh water. In this way the water consumption is reduced by approx. 4 litres for utensils which are ”less” dirty.

Switching the dishwasher ON

- Turn on the tap.
- Set main switch 1 to ON.
  Indicators light up according to the last programme that was selected.
  This same programme will run again if no other programme button 6 is pressed.
- The numerical display 3 shows the expected duration of the programme.
- The programme starts automatically.

Programme sequence indicator 7

Your dishes are being cleaned.

Your dishes are being rinsed.

Your dishes are being dried.

End of programme

The programme has ended when a figure 0:00 appears in the numerical display 3.

Switching the dishwasher OFF

Several minutes after the programme has ended:

- Set the main switch 1 to OFF.
- Turn the water tap off.
  (Does not apply when Aqua-Stop unit has been fitted)
- Remove dishes, etc. when they have cooled down.

Interrupting the programme

- Set main switch 1 to OFF.
- Indicator lights extinguish. The programme is retained in the dishwasher memory.
- If the hot water was switched ON or the appliance has already heated up and then the appliance door opened, leave the door ajar for several minutes and then close.
  Otherwise, the appliance door may fly open due to expansion.
- In order to continue with the stored programme, set the main switch to ON again.

Time delay

You can delay the start of the programme in 1-hour steps up to 24 hours.

- Switch on the appliance.
- Press the timer programming button 4 until the digital display 3 jumps to h:01.
- Keep pressing the timer programming button until the required time is displayed.
- To delete the timer programming, keep pressing the button until h:00 is displayed.

  You can change your programme selection at any time until the programme starts.

Remaining running time display

When the appliance has started, the expected programme running time is displayed. The programmed running time is affected by the water temperature, the number of dishes, as well as the degree of soiling. If these conditions are changed, the running time (depending on the selected programme) can vary greatly.
As the effect is not detected until a programme is running, the time may be longer or shorter than expected.

Cancel programme (Reset)

- Only when the master switch is ON.
  Press the A and C buttons simultaneously, and hold them pressed for approx. 3 seconds.
  The numerical display shows 0:00.
- The programme continues for approx. 1 min.
- When it has ended, set the main switch 1 to OFF.

To restart the dishwasher, set main switch 1 to ON again and select desired programme.

Changing the programme

It is possible to change the programme within 2 minutes after you have switched the dishwasher on.

Should it be necessary to change the programme after this period, the programme cycle that has already been begun (e.g. washing) will be completed first of all.

The new remaining time displayed is the sum of the remaining time from the preceding programme cycle and the remaining time attributable to the new programme that has been selected.

Intensive drying

By activating the ”Intensive drying” function, the final rinse will produce a higher temperature in all programmes resulting in an improved drying result (please note that higher temperatures might have an effect on delicate items).

- Close the door.
- Hold down programme button A and press main switch until 1 the digital display illuminates.
- Release both buttons.
  The LED for button A flashes and the digital display 3 displays the factory setting 5:00 (off) or 5:01 (on)
- To change the setting, press programme button A.
- Switch off the main switch 1; the chosen setting has now been stored.

Additional functions *

* on applicable models

Pre-Soak *

The Pre-Soak programme option serves to perform a pre-soak cycle before the main programme. This cycle enables cookware, e.g. pans, bowls, etc. to be pre-soaked and pre-rinsed in the lower rack. If you wish to pre-soak the dishes, this programme option must be selected by pressing the “Pre-Soak” button before the programme starts. The recommended detergent amount is approx. 5 g poured onto the inside of the door.

Quick *

Pressing the “Quick” button provides a short wash cycle by curtailing the drying phase and the washing time. The washing and drying performance will be reduced with the Quick programme option.

Washing contents of UPPER RACK only *

If you have a small number of dishes to wash in the upper rack (e.g. glasses, cups, plates), switch on the UPPER RACK function. If you select the UPPER RACK function, the lower rack must be empty. Add a reduced amount of detergent compared to that which is recommended for a full load.

Washing contents of LOWER RACK only *

If you have a small number of dishes to wash in the lower rack (e.g. plates, pans, bowls), switch on the LOWER RACK function. If you select the LOWER RACK function, the upper rack must be empty. Add a reduced amount of detergent compared to that which is recommended for a full load.

Maintenance and care

You can help prevent faults by checking and maintaining your appliance regularly. This will save time and reduce problems. Therefore you should occasionally examine the inside of your dishwasher.

Overall condition of the appliance

Check the rinsing compartment for grease and limescale deposits.
If you find any deposits:

- Fill the detergent dispenser with detergent. Start the empty appliance with the programme which has the highest rinsing temperature.

Clean the door seal:

- Wipe the door seal regularly with a damp cloth and remove any deposits.

Special dishwasher salt

Check the LOW SALT indicator 8 . Top up with salt, if required.

Rinse-aid

Check the LOW RINSE-AID indicator 9 on the front panel or the level indicator on the rinse-aid container 29 . Top up with rinse-aid, if required.

Filters

The filters 25 prevent larger remnants of food or other objects from getting inside the pump. This residue can occasionally clog up the filters.

The filter system consists of a filter cylinder, a flat fine filter and, depending on the model, a microfilter (*).

- Inspect the filters for obstructions every time the dishwasher has been used.
- By unscrewing the filter cylinder, you can remove the filter system. Remove any food remnants and clean the filters under running water.

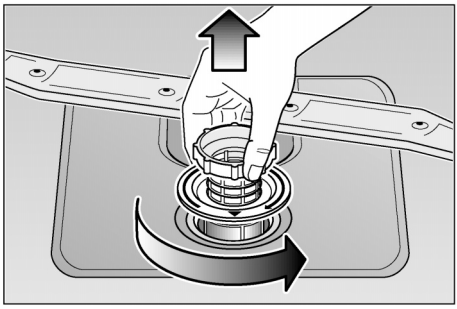

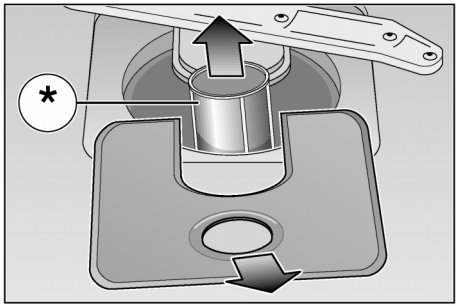

- Reassembly:
  Insert the filter system and screw down with the filter cylinder.

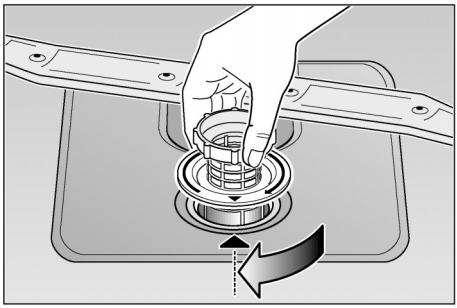

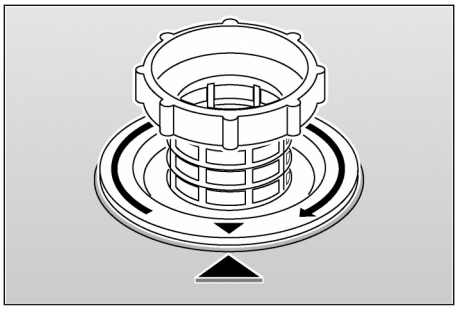

Spray arms

Lime and remnants of food in the washing water can block the nozzles in the spray arms 22 and 23 and the arm mountings .

- Inspect the nozzles in the spray arms for blocked holes due to remnants of food.
- If necessary, pull the lower arm 23 upwards and lift it off.
- Unscrew the upper spray arm 22 .
- Clean both spray arms under running water.
- Refit the spray arms. Ensure that the lower arm has locked into place and the upper one is screwed tight.

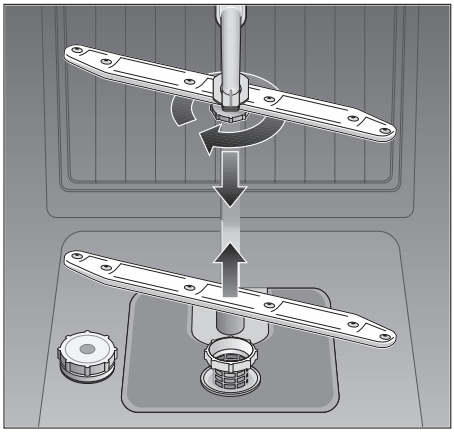

Spray arms

Pump *

* on applicable models

Larger remnants of food that have not been trapped by the filters and have been left in the water can cause a blockage in the pump. The water is no longer pumped out of the dishwasher and it can be seen covering the filter.
Proceed as follows:

- Ladle out as much water as possible.
- Remove the filters 25 .
- Undo the screw in the cover (Torx T 20) and remove the cover.
- Inspect the inside and remove any obstructions that you find.
- Re-insert the cover and screw down.
- Re-insert the filters and screw down.

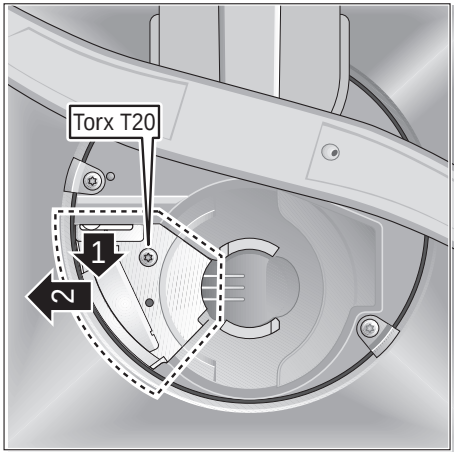

Fault finding

Resolving minor problems yourself

Experience has shown that you can resolve most problems that arise during normal daily usage yourself, without having to call out a service engineer. Not only does this save costs, but it also means that the appliance is available for use again that much sooner. The following list of common occurrences and their remedies should help you identify the causes of most problems.

Problems ...

... when the appliance is switched on

- **The appliance does not start.**
  - The mains fuse has tripped.
  - The appliance plug has not been inserted.
  - The appliance door has not been shut properly.
  - The tap has not been turned on.
  - The filter on the water supply hose is blocked.
    Switch off the appliance and pull out the mains plug. Turn off the tap. Then clean the filter which is situated at the connection of the supply hose. Finally, restore the power, turn on the tap and switch on the appliance.

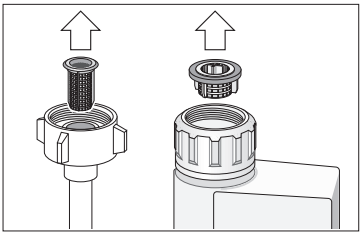

Warning

Remember:
The appliance may be repaired by a technician only. Improper repairs may cause considerable damage and/or injure the user.

... with the appliance itself

- **Lower spray arm rotates with difficulty**
  - Spray arm is blocked by small items or food remains.
- **Lid in detergent compartment cannot be closed**
  - Detergent compartment has been overfilled.
  - Mechanism is clogged with remnants of detergent.
    Indicator lamps do not extinguish after washing has finished.
- **Indicator lamps do not extinguish after washing has finished**
  - Main switch is still set to ON.
- **Remnants of detergent stuck inside dispenser**
  - Compartment was damp when it was filled up with detergent. Compartment must be dry before detergent is added.
- **Refill display does not light up.**
  - Rinse aid refill indicator switched off. (see auto 3in1 chapter)
  - Salt refill indicator switched off. (see auto 3in1 chapter)

- **Water remains inside appliance after programme has ended**
  - Blockage or kink in drainage hose.
  - Pump is jammed.
  - Filters are blocked.
  - The programme is still running. Wait for the programme to end (numerical display will indicate 0).
  - Perform “Reset” function.

... during washing

- **Unusual amount of foam is created**
  - Normal washing up liquid has been poured into the rinse-aid container.
  - Remove any spilled rinse aid with a cloth as it could otherwise lead to excessive foaming during the next washing cycle.
- **Appliance stops suddenly while washing is taking place**
  - Cut in electricity supply to appliance.
  - Water supply has been interrupted.
- **Knocking sound can be heard while washing is taking place**
  - A spray arm is knocking against the dishes inside the appliance.
- **Rattling sound can be heard while washing is taking place**
  - Crockery has not been stacked properly inside the appliance.
- **Knocking sound coming from inlet valves**
  - This is caused by the way the water pipes have been laid and it has no effect upon the way the appliance functions. There is no remedy for this.

... with the dishes, cutlery, etc.

- **Remnants of food are stuck to the dishes, cutlery, etc.**
  - Dishwasher was not loaded properly. Jets of water could not reach all parts of the dishes, etc.
  - Too many items in the rack.
  - Items in the rack were touching each other.
  - Not enough detergent was added to dispenser.
  - Selected wash programme was not intensive enough.
  - Rotation of spray arm was obstructed by dish, etc.
  - Nozzles in spray arm are blocked by remnants of food.
  - Filters are blocked.
  - Filters have been incorrectly fitted.
  - Waste-water pump is jammed.
- **Plastic items are discoloured**
  - Not enough detergent was added to dispenser.
- **White stains are left on crockery, glasses have a milky appearance**
  - Not enough detergent was added to input compartment.
  - Amount of rinse-aid was set too low.
  - Although water is quite hard, no salt has been put in appliance.
  - Water softener was set too low.
  - Lid on salt container is not screwed tight.
  - If you used a phosphate-free detergent, try a detergent containing phosphates and compare results.

- **Dishes, cutlery, etc. have not been dried**
  - Selected programme did not include drying function.
  - Amount of rinse-aid was set too low.
  - Items were removed from dishwasher too soon.
- **Glasses have a dull appearance**
  - Amount of rinse-aid was set too low.
- **Tea stains or traces of lipstick have not been completely removed**
  - Detergent does not have a sufficient bleaching effect.
  - Washing temperature was set too low.
- **Traces of rust on cutlery**
  - Cutlery is not sufficiently rustproof.
  - Salt content in washing water is too high.
    - Lid on salt container is not screwed tight.
    - Too much salt was spilt while filling container.
- **Glasses become clouded and discoloured; coating cannot be wiped off**
  - Unsuitable detergent was used.
  - Glasses are not dishwasher-proof.
- **Smears left behind on glasses and cutlery; glasses have acquired a metallic appearance**
  - Amount of rinse-aid set too high.

Customer Service

Please call your local service agent, if you are not able to resolve any problem yourself. The name of your nearest service agent is shown in the Customer Service address list. When you call, please provide details of the model number (1) and the production (FD) number (2) which are shown on the nameplate on the appliance door.

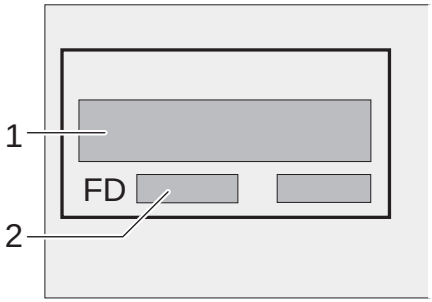

Warning

Please note that a visit by the customer service technician in the event of a fault or one of the problems previously discussed is not free of charge even during the warranty period.

Information

Disposal

Old appliances are not worthless rubbish. Valuable raw materials can be reclaimed by recycling old appliances.

Pull out the mains plug of the redundant appliance. Cut off the power cord and discard with mains plug.
To prevent children from locking themselves in the appliance and suffocating, destroy the door lock and childproof lock (if fitted).

You received your new appliance in a protective shipping carton. All packaging materials are environmentally friendly and recyclable.
Please contribute to a better environment by disposing of packaging materials in an environmentally-friendly manner. All plastic parts of the appliance are identified by internationally standardised symbols (e.g. >PS< polystyrene).
When the appliance is being disposed of, the plastic waste can be sorted for environmentally-friendly recycling.

Please ask your dealer or inquire at your local authority about current means of disposal.

Keep children away from shipping carton and packaging components. Danger of suffocation from folding cartons and plastic film.

Notes on comparison tests

You will find details of the conditions for the comparison tests on the additional ”Notes on comparison tests” sheet. The consumption values for the relevant programmes are given in the introduction.

General

- Built-under and integrated appliances which are subsequently installed as free-standing appliances must be secured to prevent them from falling over, e.g. by screwing them to the wall or by installing them under a continuous worktop which is screwed to the adjoining units.
- For Swiss version only:
  The appliance can be installed without difficulty between wooden and plastic walls in a kitchen range. If the appliance is not connected via a plug, the installation side must feature an all-pole disconnector with a contact gap of at least 3 mm in order to satisfy the relevant safety regulations.

Installation

The dishwasher must be connected by a qualified technician to ensure correct operation. The specifications for supply, drainage and connected load must fulfil the required criteria as stated in the following paragraphs or in the installation instructions.

Install the appliance in the following sequence:
– Check the delivery
– Install the appliance
– Connect the waste water
– Connect the fresh water
– Connect the power supply

Delivery

Your dishwasher was checked at the factory to ensure that it was in perfect working order. This may have left some small water stains in the dishwasher. These will disappear after the first rinse cycle.

Installation

The required installation dimensions can be found in the installation instructions. Using the height-adjustable feet, adjust the appliance until it is level. Ensure that the appliance is standing firmly.

Waste water connection

See the installation instructions for the required connection steps. If required, attach a siphon with drainage spigot. Using the enclosed parts, connect the waste water hose to the drainage spigot of the siphon.
Ensure that the drainage hose is not kinked, crushed or twisted (ensure that there is no sealing cover which prevents the waster water from flowing away!).

Fresh water connection

Using the enclosed parts, connect the fresh water connection to the tap according to the installation instructions. Ensure that the fresh water connection is not kinked, crushed or twisted.

When replacing the appliance, always connect a new water supply hose to the water supply. The old supply hose must not be re-used.

Water pressure:

Minimum 0,05 MPa (0,5 bar) – maximum 1 MPa (10 bar).
If the water pressure is higher, install a pressure reducing valve.

Flow rate:

Minimum of 10 litres per minute.

Water temperature:

We recommend that you use cold water. If you do use hot water, the temperature should not exceed 60 °C.

Electrical connection

Connect the appliance only to 230 V alternating current via a correctly installed socket with protective conductor.
See rating plate for required fusing 31 .
The socket must be attached near the dishwasher and be freely accessible.
The connection may be modified by an electrician only.

Use only a residual-current-operated circuit-breaker which features the symbol. Only this circuit breaker guarantees compliance with the currently valid regulations.

Removing the appliance

It is essential, when removing the appliance, to observe the following sequence: First, disconnect the appliance from the power supply.
Pull out the mains plug.
Turn off the water supply.
Disconnect the waste water and fresh water connections.
Loosen the fastening screws under the worktop. If fitted, remove the base panel.
Pull out the appliance, carefully pulling the hose behind.

Transporting the dishwasher

Drain water from the dishwasher. Secure all loose parts. The appliance should only be transported in an upright position.

- If the appliance is not kept upright during transport, any water left inside may seep into the control module and cause subsequent errors with programme functions.
- The appliance must be drained in the following sequence:
  - Turn on the tap.
  - Close the door.
  - Set main switch to ON.
  - Select the B programme. The programme duration in minutes is shown in the numerical display.
  - Wait for approximately 4 minutes.
  - Terminate the programme by pressing A and C simultaneously.
  - The time display changes to 0:00.
  - Wait a further minute and then switch the appliance off.
  - Turn off the tap.

Protection from freezing temperatures

If the appliance is installed in a location where there is a risk of freezing temperatures (e.g. in a holiday home), all water must be completely drained out of the interior (see “Transporting the dishwasher”).

Turn OFF the tap, disconnect the supply hose and allow to drain.

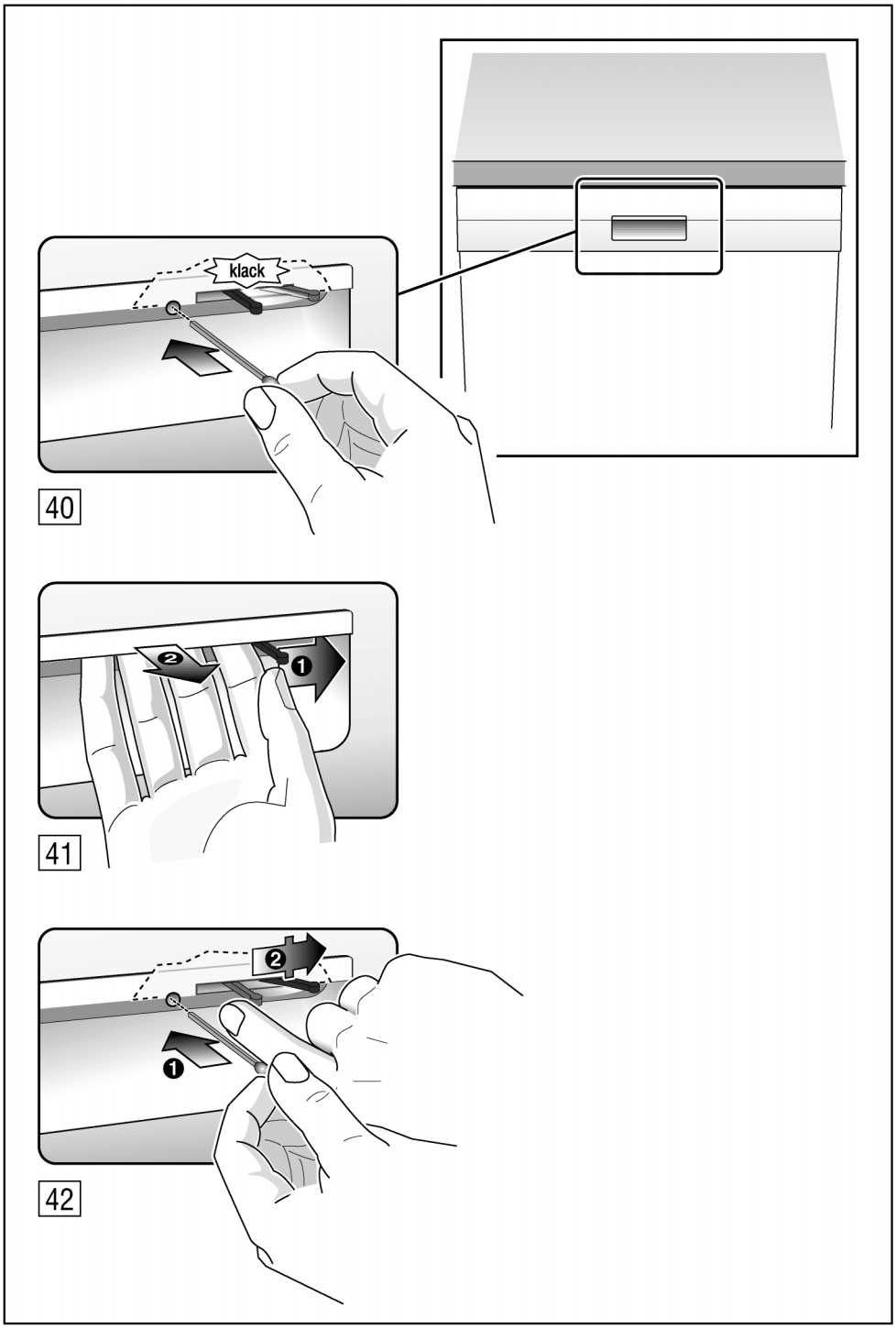
klack
40
41
42

AQUA-STOP Warranty.

(not applicable to appliances without Aqua-Stop)

In addition to warranty claims against the seller based on the sales agreement and in addition to our appliance warranty we shall replace the appliance under the following conditions:

1. If damage is caused by water due to a malfunction of our Aqua-Stop system, we shall make good the damage in the case of private consumers.
2. This liability warranty is valid for the service life of the appliance.
3. The warranty claim is subject to correct installation and connection of the appliance in accordance with our instructions. “This also includes correct installation of the Aqua-Stop extension (original accessory).” Our warranty does not cover defective supply lines or fittings up to the Aqua-Stop connection on the tap.
4. In principle, it is not necessary to monitor an appliance fitted with Aqua-Stop during operation or to secure it afterwards by turning off the tap. You should only turn off the tap if you are absent from home for a prolonged period, e.g. on holiday for several weeks.

Bosch Info–Team:
DE Tel. 0180 / 5 30 40 50 (EUR 0,12/Min. DTAG)
AT Tel. 0660 / 59 95

Internet:
http://www.bosch–hausgeraete.de

9000 009 311 en (8402)
630L