Register your new Bosch now:
www.bosch-home.com/welcome

Washer

BOSCH

en

Instruction Manual and Installation Instruction

Your new washing machine

You have chosen a Bosch washing machine.
Please take a few minutes to read and become familiar with the advantages of your washing machine.

To meet the high quality demands required by Bosch, every washing machine that leaves our factory is carefully checked to ensure that it functions correctly and is in perfect condition.
For more information on our products, accessories, replacement parts and services, see our website www.bosch-home.com or contact our after-sales service centres.

If the operating and installation instructions describe different models, any differences will be pointed out at the relevant points in the text.

Read these operating and installation instructions before switching on the washing machine

Table of contents

Operating instructions

General safety information 4
Environmental protection / conservation tips 6
Before the first wash 8
Preparing and sorting the laundry 8
Detergents and care products 10
Programmes 12
Washing options 14
Washing 15
Cleaning and care 17
What to do if... 20
After-sales service 23

Installation instructions

Installation instructions 24

Appendix

Table of programmes 28
Consumption rates 29
Index 30

General safety information

Intended use

- *For private domestic use only.*
- *The washer dryer is suitable for machine washable textiles and hand washable wool and for drying certain types of textiles according to care instructions.*
- *The appliance is suitable for operation with cold mains water and commercially available detergents and care products which are suitable for use in a washer dryer.*
- *Always follow the manufacturer's instructions when dosing all detergents, cleaning aids, cleaning products and cleaning agents.*
- *The washer dryer may be operated by children from 8 years of age, by persons who have limited physical, sensory or mental abilities and by persons who have inadequate experience or knowledge, provided they **are supervised** or **have been instructed** by a responsible person.Children must not perform any cleaning or maintenance work without supervision.*
- *Keep children under the age of 3 years away from the washer dryer.*
- *Keep pets away from the washer dryer.*
- *Install and operate the washer dryer in a room which has an outflow.*

This washer-dryer complies with the relevant safety regulations.

Electrical safety

Warning
Danger of death!
Danger of death if live parts are touched.
- When disconnecting the mains plug, always pull the plug itself and not the cable, otherwise the cable could be damaged.
- Never touch or hold the mains plug with wet hands.

Risk of injury

Warning
Risk of injury!
- If the washer dryer is lifted using projecting parts (e.g. the washer dryer door), these components may break off and cause injuries.
- Do not lift the washer dryer by its projecting parts.
- If you climb onto the washer dryer, the worktop may break and cause injuries.
- Do not climb onto the washer dryer.
- If you lean/support yourself on the open door, the washer dryer may overturn and cause injuries.
- Do not lean on the open washer dryer door.
- If you reach into the rotating drum, you may injure your hands.
- Do not grip the rotating drum. Wait until the drum stops rotating.

Warning
Risk of scalding!
- When washing at high temperatures, you may be scalded if you touch the hot washing water (e.g. if draining hot washing water into a washbasin).
- Do not touch the hot washing water.
- If a drying programme was interrupted, the washer dryer and laundry may be very hot. Select **Intensive Dry** ☼ or **Low Heat Dry** ☼ and select 15 min drying time to cool down the washing and then remove.

Safety for children

Warning
Danger of death!
If children play with the washer dryer, they may get into life-threatening situations or injure themselves.
– Do not leave children unattended near the washer dryer.
– Do not let children play with the washer dryer.

Warning
Danger of death!
Children may lock themselves in appliances, putting their lives at risk.
For appliances that have reached the end of their service life:
– Disconnect the mains plug.
– Cut through the mains cable and remove it, along with plug.
– Destroy the lock on the washer dryer door.

Warning
Risk of choking!
Children may become wrapped in packaging/film or packing parts if allowed to play with them, or they may pull them over their heads and suffocate.
Keep packaging, film and packaging parts out of the reach of children.

Warning
Risk of poisoning!
Detergents and care products may be poisonous if consumed.
Keep detergents and care products out of the reach of children.

Warning
Eye / skin irritation!
Detergents and care products may cause irritation if they come into contact with the eyes or skin.
Keep detergents and care products out of the reach of children.

Warning
Risk of injury!
When you wash/dry at high temperatures, the glass in the washer dryer door gets hot.
Do not let children touch the hot washer dryer door.

Environmental protection / conservation tips

- Separate the various waste materials of the packaging and take them to the nearest collection point.
- Always fill the appliance with the maximum amount of laundry for each programme.
- Wash normally soiled laundry without a prewash.
- Instead of **Algodón**/**Algodão** (Cottons) **90 °C,** choose the programme **Algodón**/**Algodão** (Cottons) **60 °C eco** 60°C → Page 10.
  This delivers a comparable cleaning result with significantly lower energy consumption.
- Measure the detergent according to the manufacturer's instructions and in line with the local water hardness.
- If the laundry is subsequently dried in a tumble drier, select the spin speed according to the tumble drier manufacturer's instructions.

WEEE

This appliance is labelled in accordance with European Directive 2012/19/EU concerning used electrical and electronic appliances (waste electrical and electronic equipment - WEEE).

The guideline determines the framework for the return and recycling of used appliances as applicable throughout the EU.

Control panel

Programme progress indicator lamps
Shows the programme progress and the programme status.

Display panel
Shows the selected settings, (e.g. temperature, spin speed) as well as the programme progress as a time.

Inicio/Pausa (Start/Pause) **button** → Page 14.
Starts the selected programme.
– Reset function:
  Resets the machine to the original settings → Page 16.

Operating status

Display panel

Inicio/Pausa

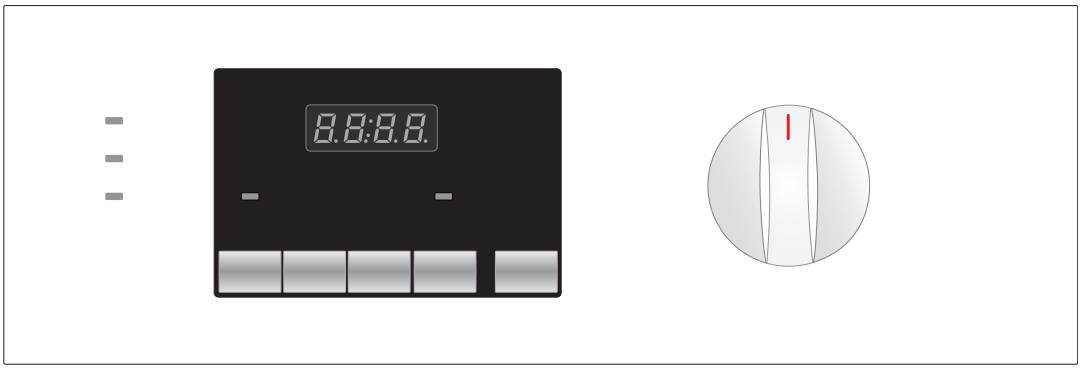

Buttons

Programme selector

Washing options with indicator lamps
Shows the selected settings:
– **Skin Care** (water plus): Increased water level during the washing and rinsing cycle.
– (temperature): Individual adjustment of the washing temperature.
– (spin): Individual adjustment of the spin speed.
– (delay): Delays the programme start.

Programme selector → Page 12
Switches the washing machine on and off and selects the programmes; can be turned in both directions.
Do not adjust the programme selector during a washing cycle.

Before the first wash

The washing machine was tested before leaving the factory.
To remove any water that may be left over from the test, do not load any laundry the first time that you run a washing programme.

- ❒ Make sure that the transport safety bolts on the rear of the washing machine have been removed → page 25.
- ❒ Do not load any laundry.
- ❒ Close the door.
- ❒ Turn on the tap.
- ❒ Pull out the detergent drawer.
- ❒ Add ½ a measuring cup of detergent to **compartment II** → page 10.

i Do not use detergents for wool or delicates (these cause foam to be formed).

- ❒ Close the detergent drawer.
- ❒ Turn the program selector to a **60°C** programme.
- ❒ Press the **Inicio**/**Pausa** (Start/Pause) button.
- ❒ At the end of the programme, turn the programme selector to Stop (Off).
- ❒ Open the washing machine door.

i Leave the door open to allow the inside of the washing machine to dry out.

Preparing and sorting the laundry

Sorting laundry for washing

- Follow the manufacturer's care information and care labels.
  The laundry may become damaged if you do not observe the fabric care symbols. Knitted fabrics made from wool or a wool blend must have the label "machine-washable".
- Wash white laundry separately from coloureds.

i
- Sort laundry according to type, colour, dirtiness and temperature.
  New colourful clothes must be washed separately.
  Risk of discolouring.
- Unhemmed or torn items should not be washed in the machine, as they may fray.
- Do not exceed the permitted load → page 28.

Sorting laundry according to the information on the care labels

Only wash laundry with the following care labels:

Care label	Type of laundry
95 90	Cottons 90°C.
60 40 30	Coloureds 60 °C, 40 °C, 30 °C.
60 40 30	Easy-Care 60 °C, 40 °C, 30 °C.
40 40 30 30	Hand and machine-washable silk and wool, cold, 40 °C, 30 °C.

Do not wash laundry that has the care symbol .

Preparing laundry for washing

Loose foreign objects (e.g. coins, paper-clips, needles, nails) may damage the laundry and components of the washing machine (e.g. the drum).

- ❒ Empty the pockets of all items.
- ❒ Brush any sand out of pockets and collars.
- ❒ Pretreat any stains.
- ❒ Close zips, button up cover buttons.
- ❒ Remove curtain fittings or place curtains in a laundry bag.
- ❒ Wash the following in a laundry bag/pillowcase:
  - Delicates (e.g. tights, curtains),
  - Small items (e.g. socks or handkerchieves),
  - Underwired bras (the underwiring may come loose during the washing process and cause damage).
- ❒ Turn trousers, knitwear and knitted fabrics (e.g. jerseys, T-shirts or sweatshirts) inside out.

Loading the laundry

Before loading the washing machine, make sure that there are no foreign objects or pets in the drum.

Risk of explosion. Items that have been treated with cleaning agents containing solvents, e.g. stain removers, must be carefully rinsed out by hand before they are loaded into the machine.

- ❒ Unfold the laundry and place it loosely into the drum.
  Mix items of laundry of varying sizes.
- ❒ Observe the maximum drum loads,
  Programme table → page 28.
- ❒ Take care not to trap items of laundry between the door and the rubber seal.
- ❒ Close the washing machine door. You will hear it click shut.
- ❒ Measure and pour in the detergent and care products for the wash programme.
- ❒ Turn on the tap.

Detergents and care products

Detergent drawer

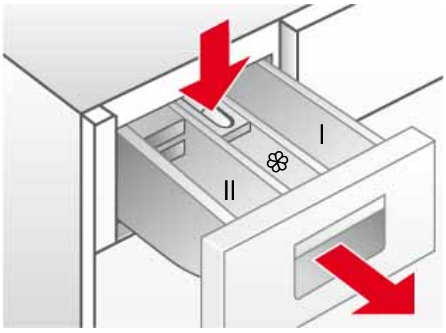

The detergent drawer is divided into three compartments

Compartment I : Detergent for prewash
Compartment II : Detergent for main wash.
Compartment ❀ : Liquid additives, such as starch or fabric softener. Additives are automatically dispensed during the final rinse cycle.

- Do not exceed the maximum capacity, otherwise compartment ❀ may be emptied too early.
- Dilute viscous additives with water before adding them to the detergent drawer compartment to prevent blockages.

Insert for liquid detergent: This must be folded down before liquid detergents are used..

To do this:

❒ Pull out the detergent drawer as far as it goes.
❒ Press on the blue zone labelled **PUSH** and take out the detergent drawer completely → page 17.
❒ Pull the blue insert in **compartment II** forwards as far it goes **and** fold it downwards.
❒ Insert the detergent drawer.

Do not use the insert (slide upwards):
- for gel-type detergents and washing powder,
- for programmes with +Prelav. (prewash) and ⏲ (Delay) option.

Detergents and care products

Risk of poisoning
Keep detergents and care products out of the reach of children.

Risk of injury
Open the detergent drawer with care. There may still be detergent residue in the drawer.

Select the correct dosage for the detergent according to:
- the amount of laundry,
- the instructions from the detergent manufacturer,
- how dirty the laundry is,
- water hardness. You can find out about water hardness in your area from your local water supply company.

Using the correct dosage reduces the impact on the environment and gives a good washing result.

Correct selection of detergent

The care label is crucial for selecting the correct detergent, temperature and treatment of the laundry. ⟶ See also www.sartex.ch

If you visit www.cleanright.eu, you will find further information on detergents, care products and cleaning agents for domestic use.

❒ Standard detergent with optical brighteners
Suitable for boil-washable white laundry made from linen or cotton
Programme: Cottons/
cold - max. 90 °C

❒ Detergent for colours without bleach or optical brighteners
Suitable for coloured laundry made from linen or cotton
Programme: Cottons/
cold - max. 60 °C

❒ Detergent for colours/delicates without optical brighteners
Suitable for coloured laundry made from easy-care fibres, synthetic fibres
Programme: Easy-Care/
cold - max. 60 °C

❒ Detergent for delicates
Suitable for delicate, fine fabrics, silk or viscose
Programme: Delicate/Silk/
cold - max. 40 °C

❒ Detergent for woollens
Suitable for wool
Wool programme/
cold - max. 40 °C

Measuring washing powder

Normally soiled laundry

❒ Set the programme without Prewash.
❒ Add all the detergent, according to the manufacturer's instructions, to **compartment II** of the detergent drawer.

i – *Only use pH-neutral wool detergent for wool programmes.*
– *Pour fabric softener into compartment ❀.*

Heavily soiled laundry

❒ Set the programme with Prewash.
❒ Add 1/4 of the recommended amount of detergent to **compartment I** of the detergent drawer and 3/4 of the detergent to **compartment II**.

Measuring liquid detergent

Only use liquid detergent for the main wash cycle.

To do this:

❒ Add the recommended amount of detergent to a liquid detergent measuring aid and place it in the drum.

or

❒ After folding down the **liquid detergent insert**, pour the detergent into **compartment II** of the detergent drawer.

i The scale on the **liquid detergent insert** helps to measure the correct dosage of liquid detergent.

i If **compartment II** is used for washing powder, the **liquid detergent insert** must be folded up.

Programmes

Programme selector

The programme selector is used to set the washing and drying programmes. The display shows suitable standard presettings for the temperature, spin speed and running time.

Washing programmes
(Depends on the model)

Algodón/Algodão (Cottons)
Suitable for hard-wearing fabrics, heat-resistant fabrics made from cotton or linen.

- Coloureds up to 60 °C.
- Whites 60 °C to 90 °C.

Note: Changes to the washing temperature and spin speed are made using the (temperature) button or the (Spin) button.
See the display panel for the standard setting.

Algodón/Algodão eco (Cottons Eco)
The programmes (standard programmes, indicated by) are suitable for cleaning normally soiled cotton fabrics and are the most efficient with respect to combined energy and water consumption.

Algodón/Algodão (Cottons) + Prelav. (prewash)
for heavily-soiled laundry with additional Prewash.

Nocturno (Night Wash)
Particularly quiet washing programme with a reduced final spin.
Sleep mode. Once the programme has finished, the display goes out, but can be reactivated by pressing and holding the Inicio/ Pausa (Start/ Pause) button. End appears in the display panel and the centrifugar (Spin) indicator lamp lights up.

Sport
For washing functional clothing and sportswear made from microfibres and synthetics. Prevents creasing with additional rinse cycle.

Rapido 15’ (Short programme)
Short programme for easy-care, lightly-soiled fabrics made from cotton, linen, synthetics or blends. Suitable for freshening up items or for washing new items before wearing for the first time. Significantly shortened programme duration.

Sintéticos (Easy-Care)
Washing programme for less hard-wearing fabrics made from cotton, linen, synthetic fibres or blended fabrics. It is advisable to sort the laundry by colour.

Sintéticos (Easy-Care) + Prelav. (+Prewash)
For heavily-soiled laundry with additional prewash.

Clinic Wash (Sensitive Plus)
For washing fabrics with increased hygiene requirements or those that will be used by allergy sufferers. The temperature remains constant during the washing process. More intensive rinsing with increased water level. Hard-wearing fabrics and easy-care fabrics made of cotton or linen.

Mix
For washing mixed items of laundry made of various hard-wearing and easy-care fabrics.

Delicados (Delicate/Silk)
Gentle programme for delicate, washable fabrics, e.g. silk, satin, synthetic fibres or blended fabrics (such as curtains). Gentle spinning between the rinse cycles and reduced final spin speed.

Lana/Lã (Wool)
Wool becomes matted when subjected to heat, moisture and movement. The wool programme takes these qualities into account and finds a compromise between standing still and movement.
Suitable for hand or machine-washable fabrics made from wool or a wool blend.

Special programmes

/ (Rinse + Spin)
An additional rinse cycle with subsequent spin cycle. Fabric softener and starch can also be used with this programme.

(Spin)
Separate spin cycle. Washing water or rinse water is emptied before the spin cycle.

(Empty)
Empties the rinsing water without final spin after selecting a washing programme with the setting (Rinse stop).

Washing options

Skin Care (water plus): button

Increased water level during the washing and rinsing cycle. For areas with very soft water or to further improve the washing result.
The lamp lights up if **Skin Care** (water plus) was selected.

🌡 40°C 60°C (temperature) button

The temperature can be individually adjusted for each programme.
To set the temperature, press the 🌡 40°C 60°C (temperature) repeatedly until the required temperature is displayed.

(Spin) button

The spin speed can be individually adjusted for each programme.
To set the spin speed, press the (Spin) button repeatedly until the required spin speed is displayed.

Rinsestop

If Rinse stop is desired, the spin speed is reduced to 0 rpm. The laundry remains in the last rinsing water. Appropriate for delicate fabrics and curtains → page 15.

Unbalanced load detection system

The automatic unbalanced load detection system ensures even distribution of the laundry by starting to spin several times. If the laundry is extremely unevenly distributed, the speed of the final spin is reduced or the spin cycle is not performed for safety reasons.

(Delay) button

You can delay the start of the programme before it begins. Using the remaining time, you can determine when the selected programme is to end. The remaining time can be set in increments of one hour up to a maximum of 24 hours.
Press the (Delay) button repeatedly until the required number of hours is displayed.

Then press the **Inicio/ Pausa** (Start/Pause) button; the start of the programme is delayed according to the remaining time set. The time remaining until the end of the programme is shown in the display panel.

Inicio/ Pausa (Start/Pause) button

Press **Inicio/ Pausa** (Start/Pause) to start the selected programme.

Programme progress

The programme progress is shown using illuminated indicator lamps:

preparado (Ready)

lavar (Wash)
- After switching on the washing machine, the lavar (**Wash)** (Ready) indicator lamp flashes.
- When the programme starts, lavar (**Wash)** lights up permanently.

aclar./enx. (Rinse)
- Lamp lights up permanently during the rinsing cycle.
- Rinse stop selected: all indicator lamps are switched off.

centrifugar (Spin)
- Lights are on permanently during the spin cycle.
- When spinning finishes, centrifugar (Spin) (End) flashes.

terminado (End)
- End appears in the display panel.

Washing

Washing

❒ Turn the programme selector to the desired programme, e.g. Algodón/Algodão (Cottons) **60°C**.

❒ The lavar (Wash) (Ready) indicator lamp flashes

❒ Change the spin speed or Rinse stop (→ page 14) and temperature if required.

❒ Load the laundry → page 9.
– Observe the maximum load, Programme table → page 28.

❒ Press the Inicio/ Pausa (Start/Pause) button.
– The washing programme starts.
– The lavar (**Wash)** indicator lamp lights up.

End of programme

The washing programmes are ended automatically. End appears in the display panel.

❒ Turn the programme selector to **Stop** (Off).
❒ Remove the washing from the drum.
❒ Leave the washing machine door open so that the inside of the washing machine can dry.
❒ Turn off the tap.

Rinsestop

If the spin function was deactivated at the start of the wash cycle, (no final spin = laundry remains in last rinsing water), the washing programme is automatically stopped after the final rinse. The display panel shows StOP alternating with --:--.

In order to empty the rinsing water and, if required, spin the laundry:
Press the **(Spin)** button repeatedly until the desired spin speed is set. The water is emptying; the washing machine is in spin cycle. The programme has ended when 0000 appears in the display panel.

i The maximum spin speed depends on the selected washing programme.

If you do **not** wish to spin the laundry:

❒ Set the programme selector to (Empty). The water is emptying and the washing machine is not in spin cycle. The programme has ended when End appears in the display panel.

❒ Turn the programme selector to **Stop** (Off).

❒ Remove the laundry.

❒ Leave the washing machine door open so that the inside of the washing machine can dry.

Changing the programme

You have selected the wrong programme by mistake:
❒ Reselect the programme. PAUS appears in the display panel.
❒ Press Inicio/ Pausa (Start/Pause). The new programme starts from the beginning.

Programme termination

Press and hold the Inicio/ Pausa (Start/Pause) button until PAUS appears in the display panel.

For washing programmes at high temperatures:
- Allow laundry to cool: Select ⊟/⊙ (Rinse + Spin)
- Select Inicio/ Pausa (Start/Pause).

For programmes at low temperatures:
- Select ⊟/⊙ (Rinse + Spin) or ⇓ (Empty).
- Select Inicio/ Pausa (Start/Pause).

Reset function:

- Using the reset function you can return to the original settings. To do this, press and hold the Inicio/ Pausa (Start/Pause) button until 0000 appears in the display panel and the three programme progress indicator lamps light up.

Cleaning and care

Safety information

Risk of electric shock
You must first disconnect the appliance from the mains. Never clean the washing machine with a water jet.

Risk of explosion.
Never clean the washing machine with solvents.

Risk of scalding
Hot detergent solution must be cooled before being drained.

Housing and control panel

- Remove detergent residue immediately.
- Wipe with a soft, damp cloth.
- Do not clean with a water jet.

Washing drum

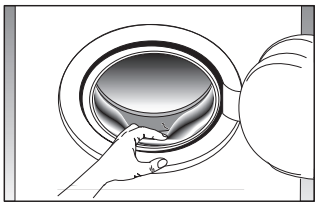

- Remove any foreign objects from the drum and rubber seals.
- Leave the washing machine door open so that the drum can dry out.
- Use chlorine-free cleaning agents; observe the manufacturer's instructions. Never use steel wool.

Detergent drawer

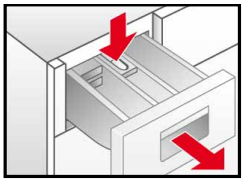

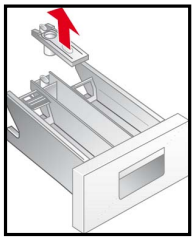

If there are detergent or care product residues:

❒ Pull out the detergent drawer as far as possible.
❒ Press on the zone labelled **PUSH** and take out the detergent drawer.
❒ Clean the detergent drawer guide.
❒ Remove the fabric softener compartment insert.
❒ Clean the detergent drawer and fabric softener compartment insert under running water.
❒ Insert the fabric softener compartment insert.
❒ Insert the detergent drawer.

Descaling the washing machine

This should not be necessary if the correct detergent dosage has been used. If it is necessary, however, proceed according to the descaling agent manufacturer's instructions. Suitable descalers can be obtained via our website or from our after-sales service → page 23.

Detergent solution pump

Information about blockages

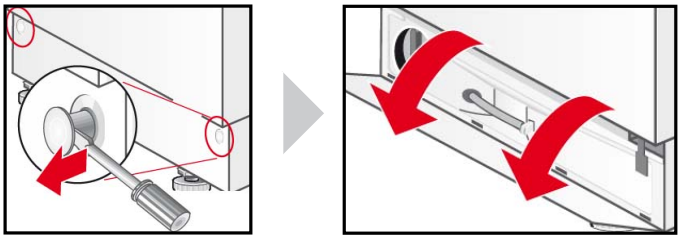

- ❒ Turn the programme selector to **Stop** (Off).
- ❒ Use a screwdriver to release the lock pins.
- ❒ Fold down the service panel and remove to the top.

Draining the water

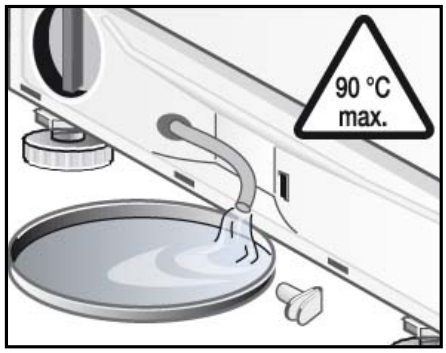

- ❒ Take the drain hose out of the retainer.
- ❒ Remove the sealing cap from the drain hose and allow the detergent solution to flow out.
  - The container for the drained water may have to be emptied several times.
  - When no more water runs out, put the sealing cap back in place.
- ❒ Place the drain hose into the retainer.

Cleaning the detergent solution pump

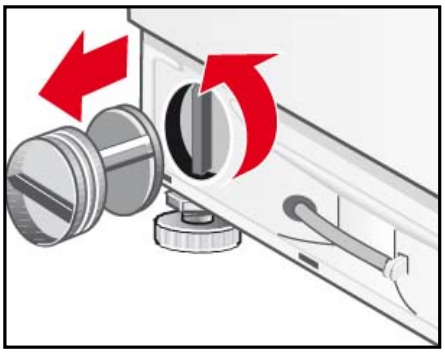

- ❒ Carefully unscrew the pump cover (residual water).
  - Clean the interior, pump cover thread and pump housing (the impeller in the detergent solution pump must be able to rotate).
- ❒ Refit the pump cover and screw it on tightly.
- ❒ Place the service cap in the 4 clip-in slots and secure to the housing using the lock pins.

i To prevent unused detergent from flowing straight into the drain during the next wash:
Pour 1 litre of water into compartment II and start the Empty programme.

Filter in the water supply

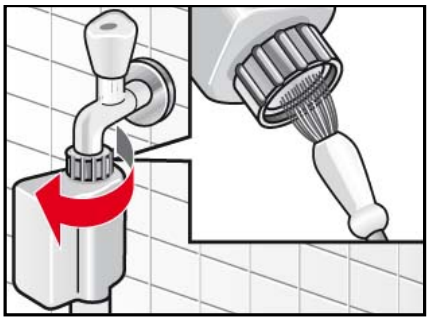

*water supply hose depends on model

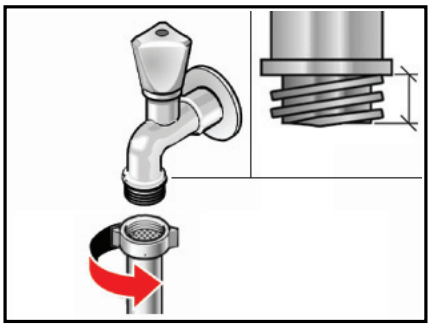

If no (or not enough) water runs into the washing machine, you must first reduce the water pressure in the supply hose:

- ❒ Turn off the tap.
- ❒ Choose any programme (except / (Rinse + Spin)/ (Empty)).
- ❒ Press the Inicio/ Pausa (Start/Pause) button.
- ❒ Allow the programme to run for approximately 40 seconds.
- ❒ Turn the programme selector to **Stop** (Off)..
- ❒ Unplug the mains plug from the socket.
- ❒ Unscrew the water supply hose from the tap.
- ❒ Clean the filter with a small brush.
- ❒ Reconnect the hose.
- ❒ Turn on the tap.
- ❒ Check whether water comes out of the end of the hose.
- ❒ If water is escaping, check that the filter is correctly fitted.

Cleaning the filter on the tap

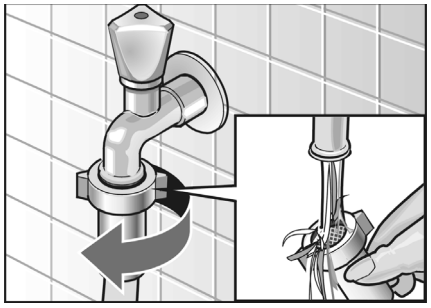

- ❒ Disconnect the hose from the water tap.
- ❒ Clean the filter under running water.
- ❒ Connect the hose.

Cleaning the filter on the washing machine

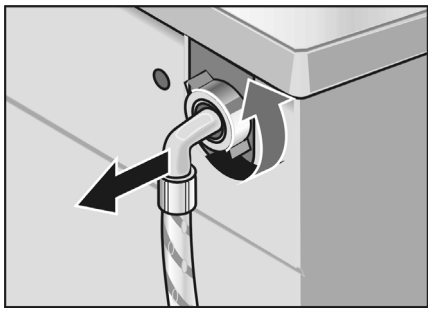

- ❒ Remove the hose from the back of the washing machine.

Cleaning the filter on the washing machine

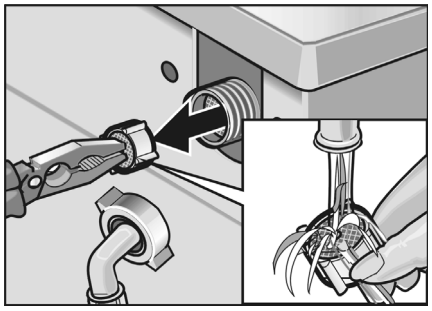

- ❒ Pull out the filter and rinse it under running water.
- ❒ Insert the filter and connect the hose.
- ❒ Turn on the water tap and check whether water comes out. If water is still escaping, check that the filter is correctly seated.
- ❒ Turn off the tap.

What to do if...

Risk of electric shock
Repairs must only be carried out by the after-sales service or authorised technicians.

If repairs are required, or if you cannot rectify a fault yourself with the help of the following table:

- ❒ Turn the programme selector to **Stop** (Off).
- ❒ Disconnect the washing machine from the power supply.
- ❒ Turn off the tap.
- ❒ Call the after-sales service → page 23.

Fault code	
OPEn or E 13	The washing machine door is not closed properly. Try to close the door properly.
E05	Water is not flowing in. See the fault **Water is not flowing in.**
PUMP or E06	The water is not emptied. See the fault **The water is not emptied.**

Other fault codes are only for our customer service staff.
Make a note of the fault code for the after-sales service.

Fault	Possible cause	Remedial action
Programme does not start.	Start button has not been pressed?	Press the **Inicio**/**Pausa** (Start/Pause) button.
	Delayed start time selected?	Not a fault. Washing machine starts after the delay period has elapsed.
	Power failure? Has the delayed start time that was selected been cleared?	Reselect the delay period or start the programme immediately: Press the **Inicio**/**Pausa** (Start/Pause) button.
	The door is not properly closed.	Close the door.
	Plug not inserted properly into socket.	Insert plug correctly.
Washing machine not reacting.	Programme malfunction?	You can use the reset function to return to the original settings. To do this, press and hold the Start button until 0000 appears in the display panel and the three programme progress indicator lamps light up.
The maximum spin speed cannot be set.	The maximum spin speed depends on the programme selected.	Change programme as required.
The water is not emptied.	Drain hose is twisted.	Fit the drain hose correctly.
	Detergent solution pump is blocked.	Clean the detergent solution pump → page 18.

Detergent residues in the detergent drawer.	Damp or lumpy detergent.	Clean and dry the detergent drawer → page 17.
		Use the measuring aid for liquid detergent.
Water is not flowing in.	The mains plug is not correctly plugged in.	Plug in the mains plug correctly.
	The door is not properly closed.	Close the door.
	The tap is not turned on.	Turn on the tap.
	The filter in the water supply hose is blocked	Clean the filter in the water supply hose → page 19.
	The water supply hose is pinched or kinked.	Check the water inlet hose.
Heavy vibrations during spinning.	The washing machine is not correctly levelled.	Level the washing machine → page 25
	The transport safety bolts have not been removed.	Remove the transport safety bolts → page 25.
Constant water supply. Water is emptied immediately afterwards by the drain hose.	Drain hose is fitted too low.	Fit the drain hose correctly → page 25.
No water can be seen in the drum.	Not a fault.	During certain programmes, the water level is below the visible range.
Water leaks from the bottom of the washing machine.	Supply hose screw connection is leaking.	Tighten the screw connection.
	Drain hose is leaking.	Have the drain hose replaced by the after-sales service.
	Detergent solution pump cover not closed properly.	Clean the detergent solution pump → page 18.
Foam escapes from the detergent drawer.	Too much detergent has been used.	Only use detergent that is correct for fabrics, and suitable for use in automatic washing machines. Make sure that you use the correct dosage.
Spin cycle performed several times.	Not a fault. The unbalanced load detection system attempts to redistribute an unbalanced load by starting to spin several times.	Always wash large and small items together.
Washing is not spun properly.	Large items of laundry are not distributed evenly in the drum. Spin speed is automatically reduced for safety reasons.	Always wash large and small items together.

Washing results not satisfactory.	Soiling worse than expected.	Select a suitable programme, e.g. a programme with Prewash. Pretreat stains if necessary.
	Too little or incorrect detergent used.	Use the correct dosage of a suitable detergent, in accordance with the manufacturer's instructions.
	Maximum load exceeded.	Select the correct load for the programme.
Detergent residues on the washing.	Some phosphate-free detergents contain water-insoluble residues which appear on washing as light specks.	Rinse washing again or change to liquid detergent. Brush washing after drying.
Grey residues on the washing.	Soiling caused by ointments, grease or oil	Wash the laundry using the maximum detergent dosage and the maximum permissible temperature – see the care label.
	Detergent dosage too low.	
Programme terminated unexpectedly.	The **Inicio**/**Pausa** (Start/Pause) button has been pressed accidentally.	Press the button again to restart the programme.
The fabric softener is not completely flushed in or too much water remains in the compartment ❀.	The fabric softener compartment insert is not correctly attached or is blocked.	Clean the fabric softener compartment insert and fit it correctly in the **compartment** ❀ → page 17.
No response from the indicator lamps.	Power cut.	The programme continues when power is restored. If you wish to remove the laundry during a power cut, you must first drain out the water → page 18. Check whether: -the plug is plugged into the socket correctly -the circuit breaker (fuse) has tripped; call the after-sales service. .
Washing machine door cannot be opened.	⊘ (Rinse stop) selected.	Select the programme **(Empty)** and press **Inicio**/**Pausa** (Start/Pause).
	The programme is running or the door is locked for safety reasons.	Wait until End appears on the display panel.
	Power cut.	Unlock the washing machine door mechanically.

Emergency release

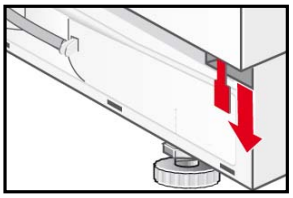

To release the door mechanically in the event of a power cut:

- ❒ Turn the programme selector to **Stop** (Off) and unplug the mains plug from the socket.
- ❒ Open the base panel and drain out the water → page 18.
- ❒ Pull the emergency release downwards and open the door at the same time.
  - – Before opening the door, make sure that there is no water or hot detergent solution in the washing machine.

⚠ Under no circumstances must you open the door with the emergency release while the drum is still turning.

If you cannot correct a fault yourself (switching on/off) or a repair is required:
– Turn the programme selector to **Stop** (Off) and disconnect the mains plug from the socket.
– Turn off the tap and call the after-sales service → page 23.

After-sales service

Before you call the after-sales service, please check whether you can correct the fault yourself → page 20.

You will be charged if a technician is called out, even during the warranty period.

You can find information about your nearest after-sales service here or in the after-sales service directory (depending on the model).

Please give the after-sales service the product number (E no.) and production number (FD) of the appliance.

E-Nr._____ **FD**_____

Enter the numbers of your appliance here.
You can find this information on the rating plate in the frame of the washing machine door.

Please help us to avoid unnecessary call-outs by quoting the product and production numbers. This will also save you the associated additional costs.

Trust the expertise of the manufacturer. Contact us for assistance. In this way, you can rest assured that the repair will be carried out by trained service technicians using original spare parts.

☏ GB 0344 892 8979 (Calls charged at local or mobile rate)

☏ IE 01450 2655 (0.03 € per minute at peak. Off peak 0.0088 € per minute)

Installation instructions

Safety information

The washing machine is heavy - take care when lifting it.

Do not operate the washing machine if it has visible signs of damage. If you are in any doubt, please consult our after-sales service or your retailer.

Do not install the washing machine in areas exposed to frost or outdoors. Frozen hoses may rip or burst. The washing machine may become damaged.

Do not stand the washing machine upside down or on its side. Do not lift the washing machine by any of the protruding parts (e.g. the door).

Remove the transport braces and cross connectors and store in a safe place.

In addition to the instructions provided in this document, special regulations from the relevant water and electricity utility companies may apply.

If in doubt, have a technician connect the appliance.

Included with the appliance

Number	Description
5	Covers for openings left after removing the transport safety bolts
1	Key for removing the transport safety bolts and setting the feet
1	24-40 mm dia. hose clamp for connection to a siphon
1	Door moulding
2	Door hinges with screws
1	Screw with washer for decorative door

On the back of the washing machine/drum:

- Water drain hose
- Water supply hose
- Mains cable with plug
- Instruction manual and booklet containing after-sales service addresses

Moisture may remain in the drum following the final inspection that every washing machine undergoes before leaving the factory.

Removing the transport safety bolts

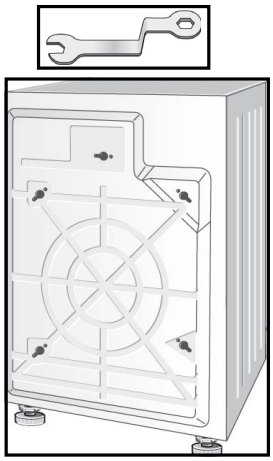

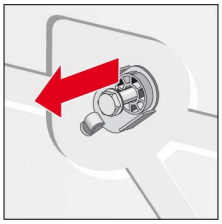

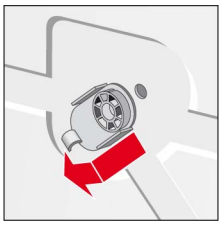

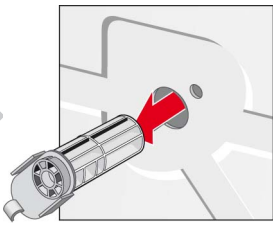

Unscrew all screws using the key provided.

Remove all transport safety bolts completely and take the mains cable out of the retainers.

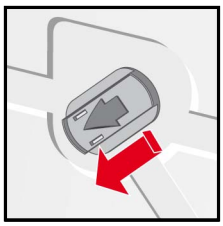

Insert the protective covers.

- *Before using the appliance for the first time, ensure that* **all** *transport safety bolts have been removed and kept safe for any subsequent transport.*
- If you need to transport the appliance at a later date: Always reaffix the transport safety bolts to prevent damage to the washing machine.

Positioning and levelling

- Appliance stability is essential to ensure that the washing machine does not “creep” during spin cycles.
- The installation area must be firm, clean and level.
- Parquet floors and soft floor coverings, e.g. carpets or foam-backed floor coverings, are unsuitable.

Levelling

Intense noise, vibrations and “wandering” may be the result of incorrect levelling.

- *All four appliance feet must stand firmly on the ground.*
- *The washing machine must not wobble.*
- *Check the alignment of the washing machine with a spirit level and adjust if necessary..*
- *The washing machine must not rest against the side panels of the installation recess.*
- *The lock nuts of the front appliance feet must be screwed tightly against the housing.*

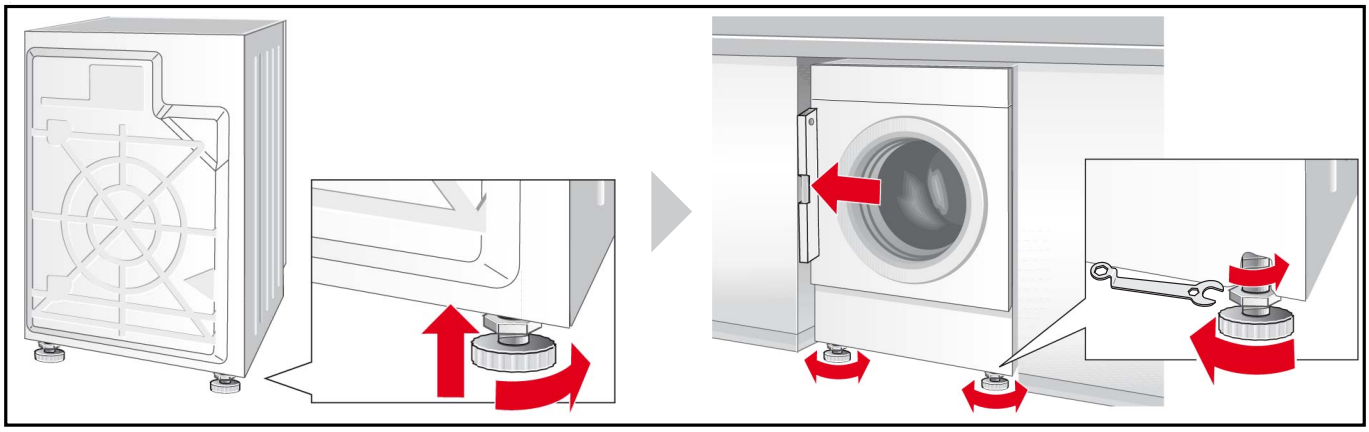

Dimensions

Width x depth x height	596 mm x 585 mm x 818 mm
Weight	76 kg

Hose and cable lengths

Left-hand connection or **Right-hand connection**

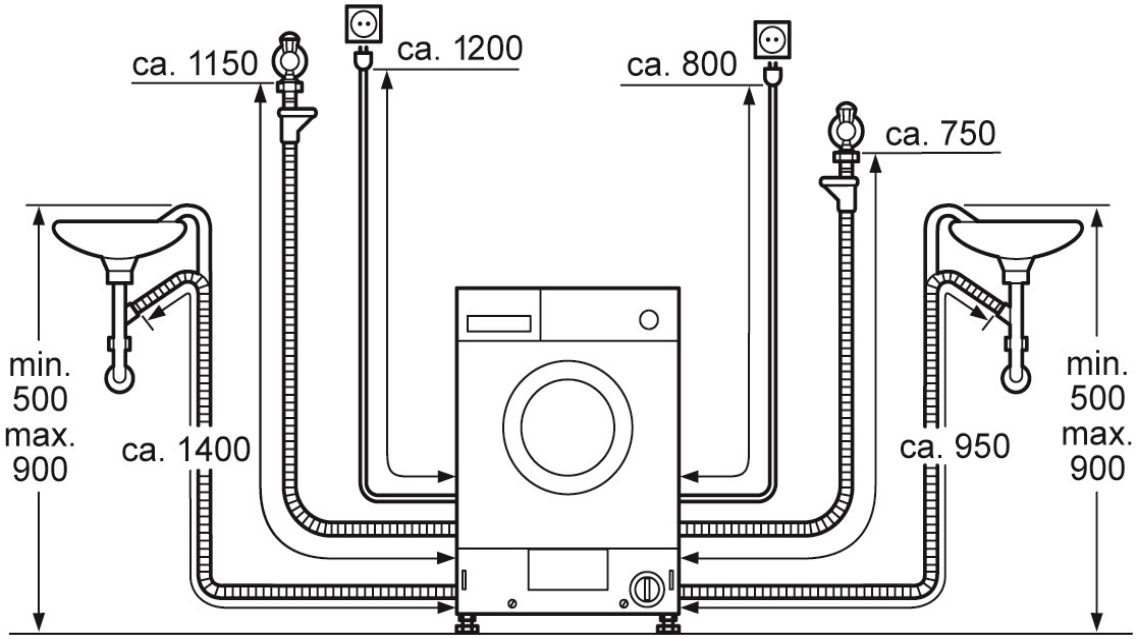

Water connection

- To prevent leaks or water damage, you must observe the instructions in this section.
- Caution: Only operate the washing machine using cold drinking water.
- Do not connect to the mixer tap of an unpressurised hot-water boiler.
- If in doubt, have a technician connect the appliance.
- Do not use a used inlet hose. Only use the inlet hose supplied or one that was purchased from an authorised specialist retailer.
- The water supply and drain hoses can be routed to the left or right, depending on installation conditions.

Water supply

Do not allow the water supply hose to be:
- bent, squashed, modified or cut through (otherwise its strength is no longer guaranteed).

Note the water pressure in the mains supply:
- *The water pressure should be between 50-900 kPa (0.5-9 bar) (at least 8 litres of water flow out per minute when the tap is turned on).*
- *If the water pressure is higher than this, a pressure reducing valve must be installed.*

Connect the supply hose to the cold water tap with ¾" connection.

Only tighten the screw connections by hand. Do not remove the filter from the supply hose.

After connecting the water supply hose:
- Open the water tap carefully, checking the leak tightness of the connection points.
- Caution: The screw connection is under mains water pressure.

Water drainage

Drainage into a siphon

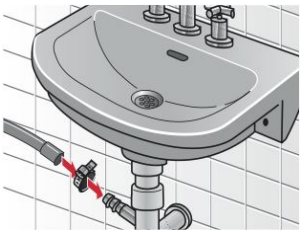

- Do not kink the drain hose or pull it lengthways.
- Height difference between the installation surface and the drain: max. 90 cm, min. 50 cm.

Secure the connection point with a 24-40 mm hose clamp.

Electrical connection

The washing machine must only be connected to an alternating current using a properly installed earthed socket.

Only use earth-leakage circuit breakers with the following symbol:

The power supply and voltage information indicated on the washing machine (rating plate) must be the same.
The connected load and fuse required are specified on the rating plate.

Make sure that:

- the mains plug fits the socket.
- the cable cross-section is adequate.
- the earthing system is properly installed.
- the appliance is not standing on the mains cable.
- the mains plug is accessible at all times.

Changes to the mains cable may only be carried out by a qualified electrician.

Do not use multiple plugs/adapters or extension cables.

Mains plug:
- do not plug in or unplug the mains plug when your hands are wet.
- pull the appliance plug out of the socket at the plug only, not by the cable.
- never unplug the plug during operation.

Fitting the door hinges to the washing machine

Once the washing machine has been installed in a kitchen unit, it can be concealed using a door. If you wish to do this, you must fit the supplied hinges to the washing machine.

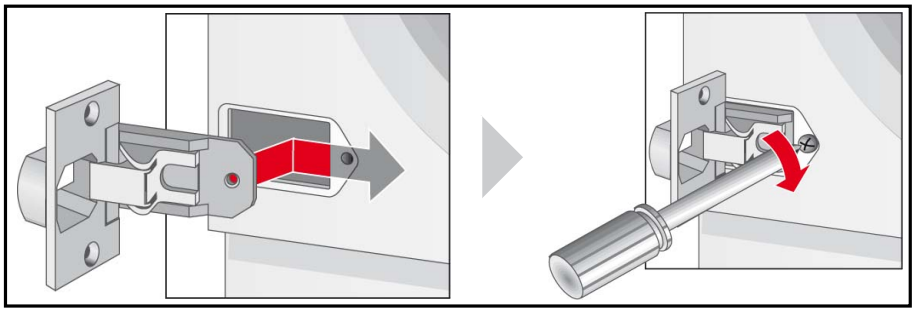

Table of programmes

Observe the information about care labels, fabric type and load quantity.

				Type of laundry	Option*
Programmes*	°C**	Max. load	Max. spin speed***		Water +
Resistentes/Algod. (Cottons)	cold-90	7 kg	1200 rpm*	Hard-wearing fabrics, heat-resistant fabrics made of cotton or linen.	✓
Resistentes/Algod. Color eco/ cor eco (Cottons Eco)	cold-60				✓
Nocturno (Night Wash)	cold-60	4 kg	1000 rpm*	Hard-wearing fabrics made of cotton or linen.	✓
Sintéticos (Easy-Care)	cold-60	3.5 kg	800 rpm*	Easy-care fabrics made of cotton, linen, synthetic fibres or blended fabrics.	✓
Clinic Wash ; (Sensitive Plus)	cold-60		1200 rpm*	Hard-wearing fabrics made of cotton or linen.	✓
Mix	cold-40		1200 rpm*	Fabrics made from cotton or easy-care fabrics.	✓
Sport	cold-40	2 kg	800 rpm*	Fabrics made from microfibres	✓
Rapido 15’ (Short programme)	cold- 30		800 rpm	Easy-care fabrics made of cotton, linen, synthetic fibres or blended fabrics	–
Delicados (Delicate/Silk)	cold-40		600 rpm*	For delicate, washable fabrics, e.g. silk, satin, synthetic fibres or blended fabrics (e.g. curtains).	✓
Lana/Lã (Wool)	cold-40		800 rpm*	Suitable for hand or machine-washable fabrics made from wool or a wool blend.	–

* Programmes and options depend on model
** Temperature: cold- 20- 30- 40- 60- 90
*** Spin speed: 0- 500- 600- 800- 1000- 1200

Consumption rates

Washing

Programme	Load	Power*	Water*	Programme duration*	Residual moisture**
Algodón (cottons) frio (cold)	7 kg	0.23 kWh	59 l	1:51 h	58 %
Algodón (cottons) 20 °C		0.35 kWh	62 l	2:00 h	
Algodón (cottons) 40 °C		0.85 kWh	62 l	2:00 h	
Algodón (cottons) 60 °C		1.25 kWh	70 l	2:30 h	
Algodón(cottons) 90 °C		2.50 kWh	70 l	2:30 h	
Algodón eco (cottons) 40 °C	3,5 kg	0.67 kWh	38 l	2:30 h	
Algodón eco (cottons) 60 °C		0.82 kWh	38 l	2:30 h	
sintéticos (easy-care) 60 °C		0.89 kWh	38 l	1:52 h	30%
sintéticos (easy-care) 40 °C		0.65 kWh	45 l	1:45 h	
delicado (delicates) frio (cold)	2 kg	0.05 kWh	35 l	0:36 h	55 %
delicado (delicates) 30 °C		0.10 kWh	49 l	1:00 h	
lana/la (wool) frio (cold)		0.05 kWh	49 l	0:47 h	40 %
lana/la (wool) 30 °C		0.25 kWh	49 l	1:00 h	

Programme setting for testing in accordance with applicable standard EN60456.
Note on comparative tests: When testing the test programmes, wash the specified load using the maximum spin speed.

*The values may deviate from the indicated values depending on water pressure, water hardness and supply temperature, ambient temperature, type, amount and soiling of the laundry, detergent used, fluctuations in the power supply and which additional functions are selected.

** Information on residual moisture based on programme-dependent spin-speed limit and maximum loads.

PROGRAMME SETTING FOR TESTING AND ENERGY LABELLING IN ACCORDANCE WITH EU DIRECTIVE 2010/30/EU WITH COLD WATER (15 °C). The programme temperature information is based on the temperature stated on the care label for the fabrics. The actual washing temperature may deviate from stated programme temperature for energy-saving reasons.

Algodón (cottons) 60 °C: max spin.
Algodón (cottons) 40 °C: max spin.

Programme	*Option*	*Load*	*Annual energy consumption*	*Annual water consumption*
Algodón (cottons) 40/60 °C	no option	7/3,5 kg	198 kWh	10340 l

Power consumption in “off mode” = 0,20 W
Power consumption in “stand-by mode” = 0,80 W

Index

C

Care information
-Washing 9
Care product 10
Changing the programme 15
Cleaning
-Control panel 17
-Detergent drawer 17
-Detergent solution pump 18
-Drum 17
-Housing 17
-Water supply hose 19
Connection fittings 26
Conservation information 6
Consumption rates 29
Control panel 7
-Cleaning 17

D

delicado (delicates)
-Programmes 29
Delicados (Delicate/Silk)
-Programmes 13, 28
Descaling 17
Detergent 10
-Liquid detergent insert 10, 11
Detergent drawer
-Cleaning 17
-Description 10
Detergent solution pump
-Cleaning 18
Dimensions 25
Display
-Fault message 20
Draining the water 18
Drum
-Cleaning 17

E

Electrical connection 27
Emergency release 22
Empty 13
-Special programmes 13
Emptying water 15
End of the programme 15
Environmental protection 6

F

Fault message 20
Faults 20
Filter
-Water supply hose 19
First wash 8
Function selector buttons 7

H

Hazard warnings
-Detergent 10
Housing
-Cleaning 17

I

Included with the appliance 24
Inicio/Pausa
-Button 14
-Control panel 7
Installation surface 24

L

Lana/Lã (wool)
-Programmes 13
Laundry
-Loading 9
-Preparing for washing 9
-Sorting for washing 8
Levelling 25
Liquid detergent insert 10

P

Power 29
Programme duration 29
Programme progress 14
-Control panel 7
Programme selector 7, 12
Programme termination 16

R

Remedial action 20
Reset function 16
resistentes algod. (cottons)
-Programmes 29
resistentes algod. (cottons) extra
-Programmes 29
Resistentes/Algod. (Cottons)
-Programmes 12, 15
Resistentes/Algod. (cottons) Co
lor eco/cor eco
-Programmes 12, 28
Rinse + Spin
-Special programmes 13, 16
Rinse stop 14, 15
-Control panel 7, 14

S

Safety information 4, 17, 20, 24
Sintéticos (Easy-Care)
-Programmes 12, 28
Special programmes 13
Spin
-Special programmes 13
-Washing options 14

T

Table of programmes 28
Transport safety bolts 25

U

Unbalanced load detection sys
tem 14

W

Washing 15
Washing machine door 15
Washing options
-Indicator lamps 7, 14
Washing programmes 12

Water 29
Water drainage 27
Water supply 26
Water supply hose
    -Cleaning 19
WEEE 6

Robert Bosch Hausgeräte GmbH
Carl-Wery-Straße 34
81739 München
DEUTSCHLAND

WIA24202ES
07.2017
8001063345