

Maxx 4
WFC 2062

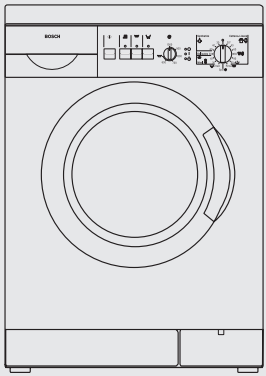

en Instruction Manual and
Installation Instructions

Household Appliances

Internet: http://www.bosch-hausgeraete.de

BOSCH

Table of Contents

Operating Instructions

Safety Instructions 3

Before Using Your Washing Machine For the First Time 5

Preparing, Sorting and Loading the Laundry 6

Laundry Detergents and Additives 7

Selecting Programmes 9

Washing 12

When the Programme has Ended 13

Special Applications 14

Cleaning and Care 15

Troubleshooting Minor Faults 19

Customer Service 21

Consumption Rates 22

Installation Instructions

Installation, Connection and Transport 23

Please read this instruction manual and all other information accompanying the washing machine before operating the appliance.

Please retain all documents for future reference or for a subsequent appliance owner.

Safety Instructions

General

Your washing machine is intended:

- For domestic use only.
- For washing machine-washable fabrics in washing lye.
- For operation using cold tap water and conventional laundry detergents and additives that are suitable for use in washing machines.

Safety Instructions

Never leave children unattended in the proximity of the washing machine.

Keep domestic pets away from the washing machine.
Do not touch the loading door when washing at high temperatures.
Do not insert / remove the mains plug with wet or damp hands.
Handle the plug body only when removing the plug from the socket.
Take care when draining hot washing lye.
Do not climb onto the washing machine or lean against the opened loading door.

⚠ Danger of suffocation!
Keep children away from shipping carton and packaging components. Danger of suffocation from folding cartons and plastic film.

⚠ Danger of fatal injury!
On out-of service appliances, unplug mains plug. Cut off power cord and discard with mains plug.
To prevent playing children from becoming trapped and endangered, ensure that the door locking mechanism is disabled.

Control panel

1. Select a programme

Can be turned in both directions.
Switches on / off the washing machine.
The programme selector cannot be turned when the programme is in progress. The programme sequence is controlled electronically.

2. Control lights illuminate

" ○ " (End) when programme is finished.
" | " (Active) when "⏀" is pressed.
" ⏻ " (Ready) when programme is selected.
Flashing control lights = operating fault.

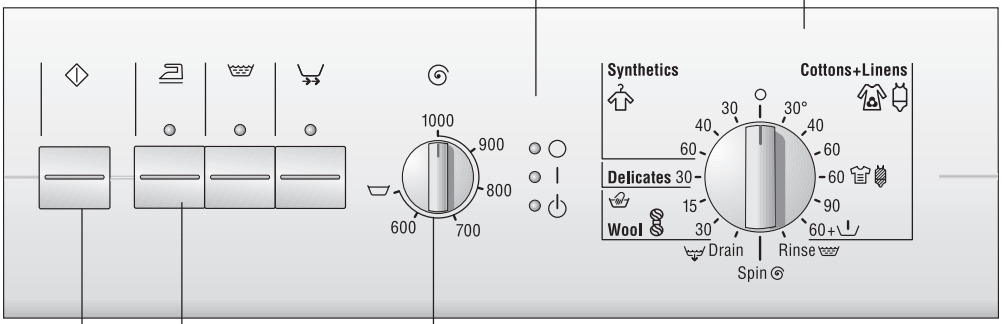

3. Set the spin speed (if desired)
Variable; must click into place at „ ".

4. Press buttons for additional functions
(where required to supplement the programme)
„ " (Less Ironing): Reduces creasing.
„ " (Rinse Plus): Additional rinsing cycle.
„ " (Quick Wash): Shortened programme duration.
It is also possible to combine the additional functions at any time.

The control light above the option button lights up when the respective additional function is active.

To cancel the additional function: Press the button again.

5. Press the "⏀" button

The washing process begins (programme must have been selected).

Before Using Your Washing Machine For the First Time

The washing machine must have been installed and connected properly (refer to Page 23).

Your appliance was tested before leaving the factory. To remove any water left over from testing procedures, the first washing cycle should be carried out without laundry in the machine.

- ❑ Do not load any laundry.
- ❑ Turn on the water tap.
- ❑ Pull out the detergent dispenser up to the end stop.
- ❑ Pour approx. 1 litre / 1 ¾ pt of water into chamber **II** of the detergent dispenser.
- ❑ Half fill the measuring beaker with detergent and pour into chamber **II**. Do not use any special detergents for delicates or woollens (excessive foam).
- ❑ Set the programme selector to "90 °C Cottons + Linens".
  The " ⏻ " control light comes on.
- ❑ Press the "⏻" button.
  The " | " control light comes on.

When the " ○ " control light comes on:

- ❑ Set the programme selector to " ○ ".

Preparing, Sorting and Loading the Laundry

Preparing the laundry

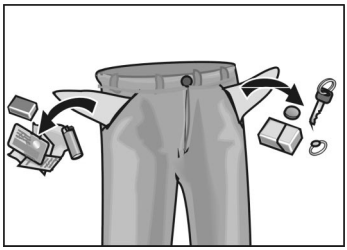

Caution
Loose debris (e.g. coins, paper clips, needles, nails) can damage items of clothing as well as parts of the washing machine (e.g. drum).

- ❑ Empty all pockets on items of clothing.
- ❑ Brush out any sand from pockets and cuffs.
- ❑ Close zip-fasteners and button up bed covers.
- ❑ Remove curtain runners or tie them up in a net / bag.
- ❑ The following items must be washed inside a net / pillow case:
  - – Extremely delicate items, e.g. fine tights, net curtains.
  - – Small items, e.g. small socks or handkerchiefs.
  - – Underwired bras (the wire may come loose during washing and cause damage).
- ❑ When washing trousers, knitwear and woven fabrics, e.g. shirts, T-shirts or sweatshirts, always turn these items inside out.

Sorting the laundry

Caution
Items of clothing can become discoloured. Never wash new multi-coloured items together with other items.

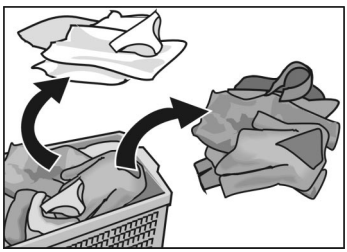

White items may become grey. Always wash white and coloured items separately.

 = do not wash

Loading the laundry

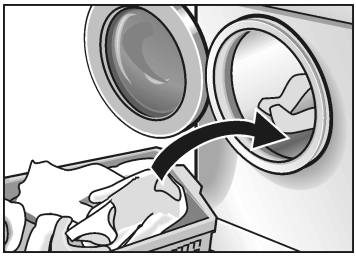

⚠ Risk of explosion!
Items of clothing that have been pretreated with solvent-based cleaning agents, e.g. stain remover and dry cleaning spirit, represent an explosion hazard once loaded into the washing machine. Therefore, these items must first be rinsed thoroughly by hand.

Caution
Loose debris in the washing machine drum can damage the laundry. Before loading the laundry, check that there is no debris in the drum.

- ❑ Open the loading door.
- ❑ Unfold the sorted items of clothing and place them loosely into the drum.
- ❑ Do not exceed the maximum load.
- ❑ Close the loading door.
  Take care not to trap any items of clothing between the loading door and rubber seal.

Laundry Detergents and Additives

Dispensing the correct amount of detergent

⚠ Risk of poisoning!
Keep detergents and additives out of the reach of children.

Dispense the detergent according to:

- ❑ the water hardness. This information can be obtained from your local water authority.
- ❑ the amount of laundry.
- ❑ the amount of soil..
- ❑ the specifications of the detergent manufacturer. Dispensing the correct amount of detergent relieves the strain on the environment and ensures optimum washing results.

Pour liquid detergent into the appropriate dispensing chamber.

Filling laundry detergent and/or additive dispensers

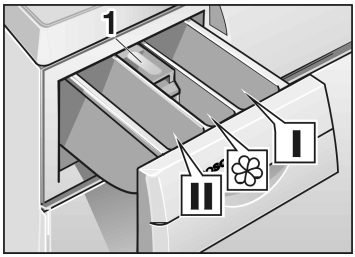

Chamber **I**:
Detergent for prewash or starch.

Chamber **II**:
Detergent for main wash, water softener, bleach, pre-soaking agent or stain removal product.

Chamber ❀:
Additives, e.g. fabric softener or former.

– Fill at least to lower edge of insert **1**.

– If the liquid additive is thick, mix with a little water before dispensing (prevents clogging of the overflow).

Selecting Programmes

Basic programmes

Select the desired programme (refer also to separate “Programme Chart”).

90 °C Cottons + Linens
An energy-intensive programme for heat-resistant fabrics made from cotton or linen.

For the protection of the drainage pipe, the hot washing solution is mixed with cold water before being drained.

60 °C Cottons + Linens (Intensive Stains)
An energy-saving programme for stained or very dirty fabrics.
The extended washing time means that a cleaning result comparable to that of the 90 °C programme is achieved using considerably less energy.

60 °C Cottons + Linens + (with Prewash)
For very dirty, hard-wearing fabrics.

30, 40, 60 °C Cottons + Linens
For hard-wearing fabrics

30, 40, 60 °C Synthetics
For easy-care fabrics made from cotton, synthetics or blended fibres.

30 °C Delicates
For sensitive, easy-care fabrics made from cotton, synthetics , silk or blended fibres, and net curtains.
No spinning between rinsing cycles.

15, 30 °C, Wool
For hand or machine-washable fabrics made from wool or wool blend.

Extra cycle programme selector

Rinse
Separate rinsing cycle with subsequent spin cycle for easy-care fabrics.

Spin
Separate spin cycle. Washing solution or rinsing water is drained prior to the spin cycle.

Drain
Draining of the rinsing water after a wash programme with the "" setting for the gentle treatment of delicate laundry.

Spin speed selector

Basic setting
(Spin speed selector pointing upward)
Laundry is spun at maximum spin speed in the "Cottons/Linens" programme.

In the "Synthetics", "Delicates" and "Wool" programmes, a lower spin speed will automatically be used, irrespective of the position of the button – gentle treatment of delicate fabrics.

Maximum spin speeds

Revolutions per minute	Type of laundry / Extra cycle
1000	Cottons + Linens
800	Synthetics
600	Delicates
800	Wool
800	Rinse
800	Spin

Additional function programme selector

Rinse hold
For delicate laundry and net curtains. The laundry remains lying in the water after the final rinse.
Before the laundry can be unloaded, the "Drain" or "Spin" programme must be performed.

Additional function

Quick Wash
Reduced washing duration – only 2 rinsing cycles.
Suitable for slightly dirty laundry.

Recommended load amount: Up to a maximum of 2 kg.

Rinse Plus

An additional rinse cycle is carried out;
Washing time is extended accordingly.

Recommended applications:
– in areas with very soft water.
– for further improvement of the rinsing results.

Less Ironing
Special spin cycle with post-spin loosening cycle.
The laundry is left lying loosely in the drum, thus reducing creasing.

Observe the maximum load for each type of fabric;
Remove the laundry immediately after the spin cycle.

Washing

Start the programme

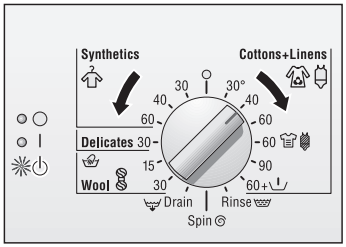

- ❑ Turn on the water tap.
- ❑ Turn the programme selector to the desired programme (refer also to separate “Programme Chart”).
  The “ ⏻ ” control light comes on.
- ❑ Select the desired spin speed or “ ▽ ”.
- ❑ Where required, press the option button(s) for additional function(s).
- ❑ Press the “ ⏻ ” button.
  The “ | ” control light comes on, and the programme starts.

The “ | Active” control light remains lit for the entire duration of the programme.

Changing a programme

If you have accidentally selected the wrong programme:

- ❑ Turn the programme selector to “ ○ ”.
- ❑ Turn the programme selector to the desired programme.
  The “ ⏻ ” control light comes on.
- ❑ Press the “ ⏻ ” button.
  The “ | ” control light comes on, and the new programme starts.

Cancelling active programme

If you wish to prematurely end a programme:

- ❑ Turn the programme selector to “ ○ ”.
- ❑ Turn the programme selector to “ Drain” or “ Spin”.
  The “ ⏻ ” control light comes on.
- ❑ Press the “ ⏻ ” button.
  The “ | ” control light comes on.

When the Programme has Ended

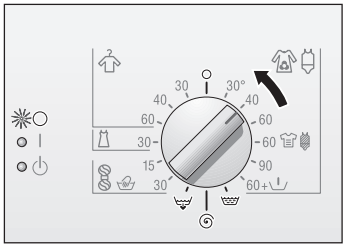

The " ○ " control light comes on.

❑ Turn the programme selector to " ○ ",

and, where required:

❑ Select a programme option ("Drain", "Spin" or "Rinse").

❑ Press the "⏻" button.

❑ At the end of the programme option, turn the programme selector to " ○ ".

Unloading the laundry

❑ Turn off the water tap.

❑ Open the loading door.

If the loading door cannot be opened:
Wait for 2 minutes (the safety function is active)
or
there is still water in the washing machine if the "" option was selected.
In this latter case, select the "Drain" or "Spin" programme.

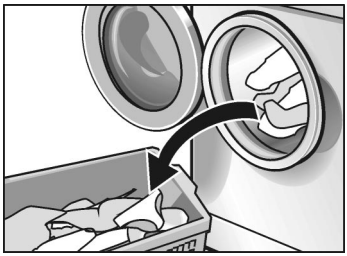

❑ Unload the laundry.

Caution
Remove any debris (e.g. coins, paper clips) from the drum and rubber seal – **risk of rust formation!**

❑ Leave the loading door open to allow the inside of the washing machine to dry out.

Special Applications

Pre-soak

- ❑ Load laundry of the same colour.
- ❑ Add the presoak agent to chamber **II** according to the manufacturer's specifications.
- ❑ Turn the programme selector to "30 °C Cottons + Linens".
  The " " control light comes on.
- ❑ Press the "" button.
  The " " control light comes on, and the programme starts.
- ❑ After approx. 15 minutes, turn the programme selector to " ". The laundry is left to lie in the water.
- ❑ Select a programme after the desired soaking period.

Do not add any additional detergent. The presoak solution continues to be used in the wash programme.

Starching

The laundry must not be treated with fabric softener.

- ❑ Load the laundry.
- ❑ Dispense the correct amount of starch for approx. 15 litres / 3.3 gal. of water. Powdered starch must first be dissolved in water according to the manufacturer's specifications.
- ❑ Turn the programme selector to "Rinse".
- ❑ Set the spin speed ("" is also possible).
- ❑ Press the "" button.

As soon as water starts to enter the machine:

- ❑ Pull out the detergent dispenser slightly.
- ❑ Add the starching solution to chamber **I**.
- ❑ Close the detergent dispenser.

If the "" option is selected, the "Drain" programme must subsequently be selected.

Cleaning and Care

⚠ **Risk of electric shock!**
Always disconnect the appliance from the mains before cleaning.

Never clean the washing machine with a jet of water.

⚠ **Risk of explosion!**
Never use solvents to clean the appliance.

Cleaning the appliance housing and control panel

As required:

- ❑ Use hot soapy water or a mild, non-abrasive cleaning agent.
- ❑ Rub dry with a soft towel.

Cleaning the drum

In the event that rust spots have formed due to left-over debris (e.g. coins, paper clips, needles, nails):

- ❑ Use a chorine-free cleaning agent. Follow the manufacturer's instructions. Never use steel wool.

Descaling the washing machine

Caution
Descaling agents contain acids which can attack parts of the washing machine and discolour the laundry.

Provided that you use the correct amount of detergent, it is not necessary to descale the washing machine.

If, however, descaling the appliance becomes necessary, please follow the instructions provided by the descaling agent manufacturer.

Cleaning the detergent dispenser

In the event that residual detergents or additives have accumulated:

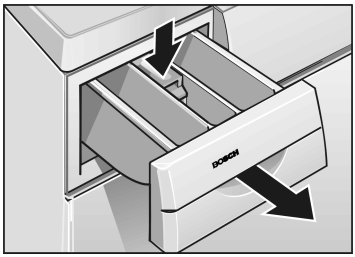

- ❑ Pull out the detergent dispenser up to the end stop, press down the hollow on the insert and remove the detergent dispenser completely.

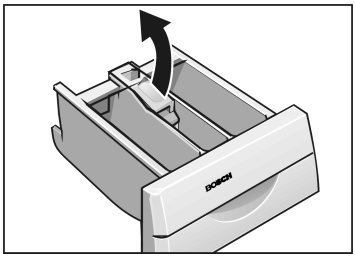

- ❑ Pull up the insert.
- ❑ Rinse the detergent dispenser under hot running water.

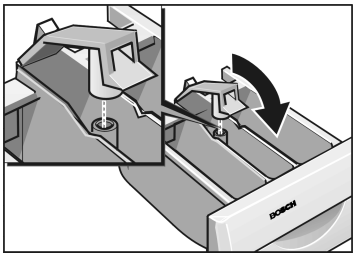

- ❑ Push down the insert until it clicks into place.
- ❑ Insert the detergent dispenser.

Cleaning the drain pump

This is necessary if the washing solution cannot be completely drained. The pump is blocked by either loose debris or fluff which accumulates if fluff-giving fabrics are washed at high temperatures.

Draining the washing solution

(Up to 20 litres / 4.4 gal. Have a suitable container ready.)

⚠ Risk of scalding!
Allow the hot washing solution to cool.

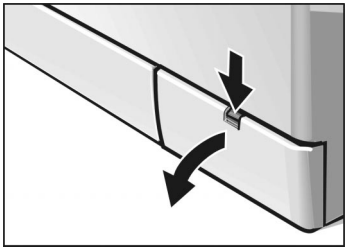

- ❑ Turn the programme selector to " ○ ".
- ❑ Fold down the cover panel.

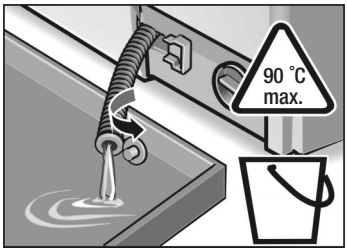

- ❑ Remove the drain hose from its holder and pull the hose out of the housing.
- ❑ Pull down the closing cap and allow the washing lye to flow into a suitable container.
- ❑ Push up the closing cap and place the drain hose back in its holder.

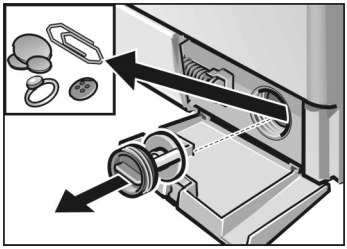

- ❑ Carefully remove the pump cap.
- ❑ Remove any loose debris / fluff from inside the pump and clean the pump. The pump impeller must be able to rotate.
  Clean any residual lye or fluff from the thread of the pump cap and pump housing.
- ❑ Attach and tighten the pump cap.
- ❑ Attach and close the cover plate.

To avoid unused detergent from flowing into the drain during the next wash cycle:

- ❑ Pour 1 litre / 1 ¾ pt of water into chamber **II**.
- ❑ Select the "Drain" programme.

Cleaning water inlet strainers

This is necessary if very little or no water flows into the washing machine.

First release the water pressure in the supply hose:

- ❑ Turn off the water tap.
- ❑ Turn the programme selector to any programme (except "Spin" and "Drain").
- ❑ Press the "⏻" button, and allow the programme to run for approx. 40 seconds.

Cleaning the strainer at the water tap

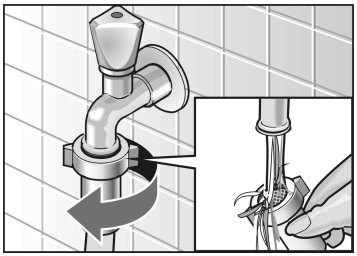

- ❑ Disconnect the hose from the water tap.
- ❑ Rinse the strainer under flowing water.
- ❑ Reconnect the hose.

Cleaning the strainer on the washing machine

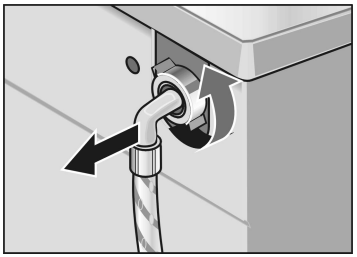

- ❑ Disconnect the hose from the back of the washing machine.

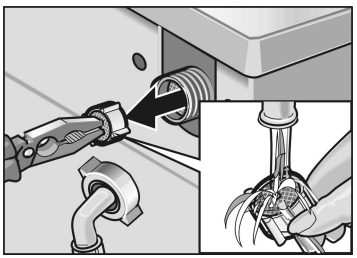

- ❑ Pull out the strainer and rinse under running water.
- ❑ Insert the strainer and reconnect the hose.
- ❑ Turn on the water tap and check whether water is still discharged. If water is still discharged, check that the strainer is attached properly.
- ❑ Turn off the water tap.

Troubleshooting Minor Faults

⚠ Risk of electric shock!
Repairs must only be carried out by our Customer Service or an authorized technician.

If repairs are needed, and assuming that you cannot eliminate the fault yourself with the aid the following table:

- ❑ Turn the programme selector to "○".
- ❑ Disconnect the washing machine from the mains.
- ❑ Turn off the water tap.
- ❑ Call Customer Service (refer to Page 21).

Fault	Cause	Action
The loading door cannot be opened.	"" was selected.	Select "Drain" or "Spin".
	Safety function is active.	Wait for 2 minutes.
Detergent residue in the detergent dispenser.	Detergent was damp or lumpy.	Clean and dry the detergent dispenser (refer to Page 16).
		Use the dispensing aid for liquid detergents.
Control lights do not come on.	A fuse has triggered.	Switch on / replace the fuse.
		Call Customer Service if this fault is repeated.
	Power failure.	An interrupted programme will be resumed when power returns. If you wish to unload the laundry, proceed as in "Cleaning the drain pump", Page 17.
	Plug is loose or not inserted.	
Programme does not start. The "⏻" control light flashes.	Loading door not closed.	Check whether laundry is trapped in door.
		Close the loading door (a click should be heard).

Fault	Cause	Action
Programme does not start.	"⏻" button not pressed.	Press the "⏻" button.
Water does enter the machine or detergent is not washed away. The " | " control light flashes.	Water tap not turned on.	Turn on water tap.
	Supply hose kinked or trapped.	
	Strainer in supply hose clogged.	Clean the strainer (refer to Page 18).
Detergent in chamber **I** is not washed away.	A programme without Prewash was selected.	Select "60 °C Cottons + Linens + I".
Water cannot be seen in drum.	This is not a fault. The water lies below the visible part of the drum.	
Washing solution is not completely drained. The " ○ " control light flashes.	Loose debris is blocking the pump.	Clean the pump (refer to Page 17).
	Fluff-producing laundry was washed at a high temperature. The water drainage pipe or drain hose is blocked.	Clean the water drainage pipe and/or drain hose.
Water is flowing out from underneath the machine.	The thread of the supply hose is not tight.	Tighten the thread.
	Leak in the drain hose.	Replace the drain hose.
Foam coming out of the detergent dispenser.	To much detergent.	Mix 1 tablespoon of fabric softener with ½ litre / 1 pt of water and pour into chamber **II** of the detergent dispenser.
		Reduce the amount of detergent next time.
The programme takes longer than usual.	This is not a fault. The imbalance compensation system is attempting to balance the load by distributing the laundry more evenly.	Wash large and small items together to reduce imbalances.
	The foam detection feature has activated an additional rinsing cycle to reduce the amount of foam.	Add a more appropriate amount of detergent next time.

Fault	Cause	Action
Repeated spinning at short intervals.	This is not a fault. The imbalance compensation system is attempting to balance the load through repeated spins.	
Unsatisfactory washing result.	The degree of dirt was higher than supposed.	Select a more suitable programme.
	Not enough detergent.	Add detergent according to the manufacturer's specifications.
Detergent residue on the laundry.	Some phosphate-free detergents contain water-insoluble residues that may appear as light spots on the laundry.	Select "Rinse" immediately, or brush off spots when laundry is dry.
Grey residues on the laundry.	Dirt accumulation from ointments, fats or oils.	Add the maximum amount of detergent and select the highest permissible temperature next time.

Customer Service

Before calling the Customer Service, please make sure that you cannot eliminate the fault yourself (refer to Page 19).

This is because consultation provided by our technicians, even within the warranty period, will lead to costs being incurred by yourself.

Your nearest Customer Service centre can be found in the index supplied. When calling the Customer Service, please specify the product number (E-Nr.) and production number (FD-Nr.) of your appliance.

These numbers are shown on the rating plate which can be found on the frame of the open door and also on the identification plate, enclosed by a thick line, on the front of the machine behind the nameplate.

Identification plate

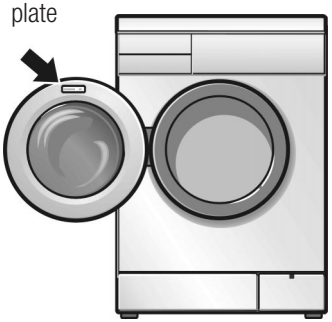

E-Nr. _____ **FD**_____

Please note the two numbers in the space provided above.

Consumption Rates

Normal programme (without additional functions)	Load	Consumption rates **		
		Electricity	Water	Duration
40 °C Cottons + Linens*	4.0 kg	0.45 kWh	50 l	130 min.
60 °C Cottons + Linens	4.0 kg	0.7 kWh	50 l	130 min.
60 °C Cottons + Linens*	4.0 kg	0.76 kWh	45 l	135 min.
90 °C Cottons + Linens (the hot washing solution is mixed with cold water before being drained)	4.0 kg	1.7 kWh	57 l	130 min.
40 °C Synthetics*	2.0 kg	0.4 kWh	45 l	78 min.
30 °C Delicates	2.0 kg	0.3 kWh	50 l	45 min.
30 °C Wool*	2.0 kg	0.2 kWh	35 l	50 min.

* Calculated from test programmes pursuant to EN 60456 and IEC 60456

** The consumption rates may deviate from the stated values depending on water pressure and hardness, room temperature, type and amount of laundry, detergents used, fluctuations in the mains voltage and selected additional functions.

Installation, Connection and Transport

Safety information

⚠ Risk of injury!

The washing machine is heavy. Take care when lifting it.

Caution
Frozen hoses can tear / burst. Do not install the washing machine outdoors or in an area prone to frost.

Take care not to damage the washing machine. Do not hold onto protruding parts (e.g. loading door) when lifting.

In addition to the safety information listed here, the local water and electricity supplier may have special requirements.

If in any doubt, have the appliance connected by an authorized technician.

Standard accessories

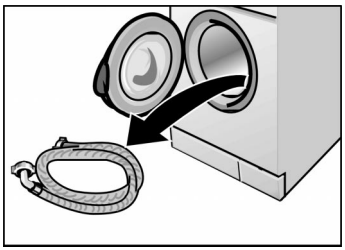

Inside the drum:

– Water-inlet hose.

Moisture in the drum is due to the final inspection which every washing machine undergoes before it leaves the factory.

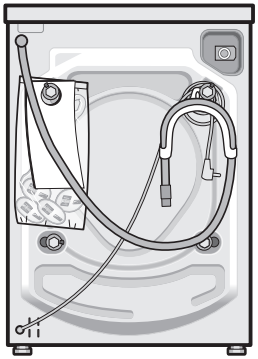

On the rear of the washing machine:

– Water drainage hose.
– Elbow for attaching the drain hose, e.g. into a wash basin
– Power cord.
– Spanner.
– Covers for holes left by removing the transport bolts.

Depending on the connection situation, the following part is also required:

– 1 hose clip Ø 24–40 mm (DIY store) is also required for connection to a siphon.

Useful tools

The following tools are helpful:

– Ring wrench (SW 13)
– Spirit level

Dimensions

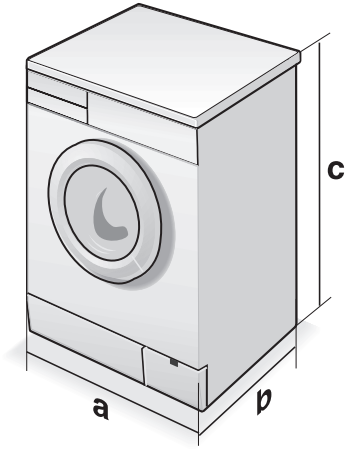

a = 595 mm

b = 400 mm

c = 857 mm

Approx. weight = 65 kg

Installation area

Appliance stability is important so that the washing machine does not “wander” during the spin cycles.

The installation area must be solid and even. Soft floor surfaces, such as carpets or surfaces with foam backing, are not suitable.

If the washing machine is to be installed on a wood joist ceiling:

- ❑ If possible, place the washing machine in a corner of the room.
- ❑ Screw a water-resistant wooden board (at least 30 mm thick) to the floor.
- ❑ Affix the feet of the washing machine using holding brackets *.

If the washing machine is to be placed on a pedestal:

- ❑ Affix the feet of the washing machine using holding brackets *.

* Holding brackets (set) can be obtained from a specialist store or the Customer Service (order no. WMZ 2200).

Built-under or built-in appliance installation

The appliance must be built under or built in prior to connecting the power supply.

The appliance can be built into or under a kitchen work surface. For this purpose, a recess width of 60 cm is required.

- ❑ The washing machine must only be installed under a one-piece worktop that is permanently attached to the surrounding cabinets.

Caution
For safety reasons in built-under installation, a metal cover* must be assembled by a specialist in place of the appliance cover plate.

* The metal cover (kit) can be obtained from a specialist store or the Customer Service (order no.WMZ 2410).

Removing the transport bolts

Caution
The transport bolts must always be removed before using the appliance for the first time and must be retained for any subsequent transport (e.g. when moving).

- ❑ Loosen all four transit bolts with the A/F 13 wrench until they are freely movable.
- ❑ If not all parts have been removed and have fallen into the bottom of the washing machine: open the door, pull the drum forwards slightly, reach in and remove the parts.

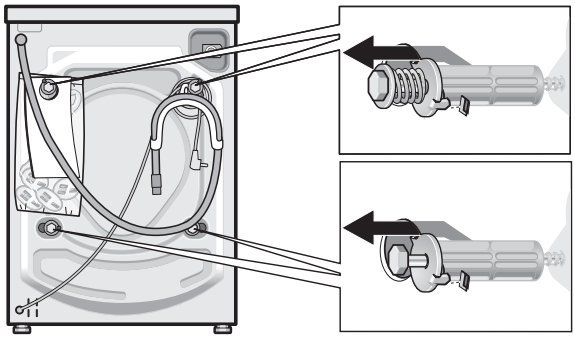

- ❑ Insert the covers.

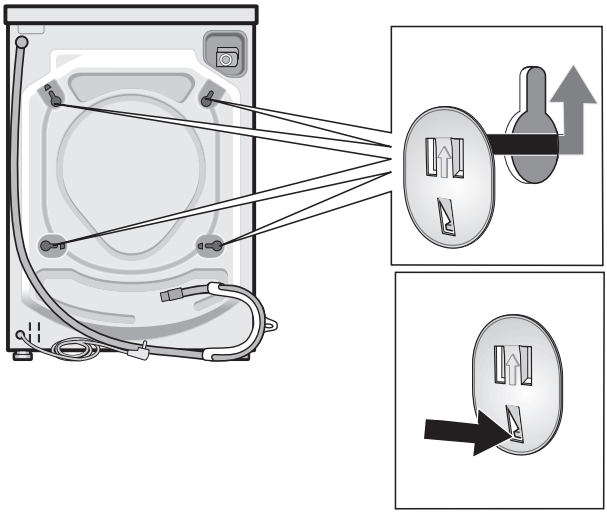

Hose and cable lengths

Left-hand connection

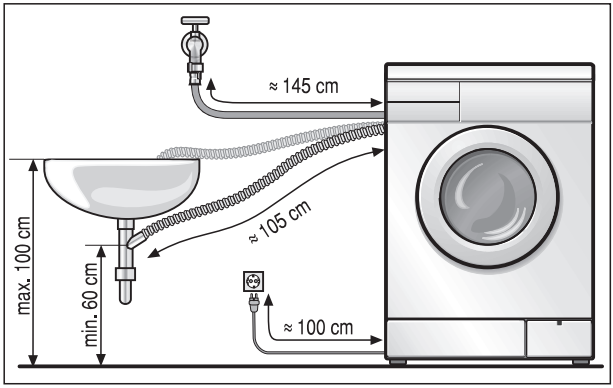

Right-hand connection

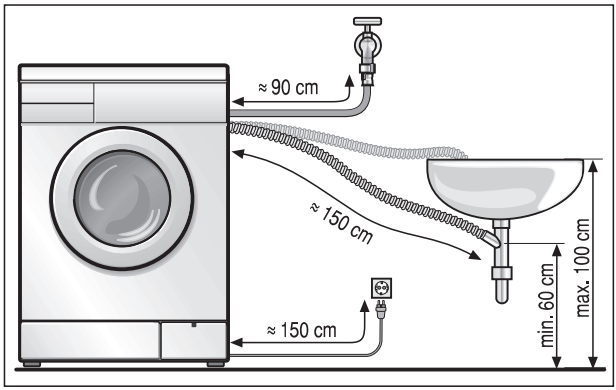

Other hoses

Available from specialist dealers:

– Extended supply hose (approx. 2.20 m).

Water connection

Water supply

Caution

The washing machine must only be operated with cold tap water. Do not connect the appliance to the mixer tap of an unpressurized hot-water boiler.

If in any doubt, have the water connection carried out by an authorized technician.

The water supply hose must not be:

- Bent or squashed.
- Modified or cut through (stability can no longer be guaranteed).

Plastic threads must only be tightened by hand. Do not remove the strainer from the water supply hose.

Observe the water pressure in the supply network:

- The water pressure should be between 1 and 10 bars (when the tap is turned on, at least 8 litres of water is discharged per minute).
- A pressure reducing valve must be installed if the maximum water pressure is exceeded.

Connect the water supply hose

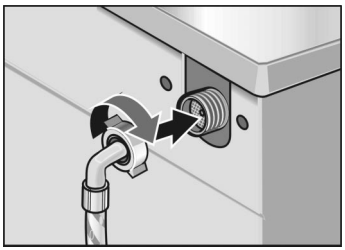

❑ To the back of the washing machine, and...

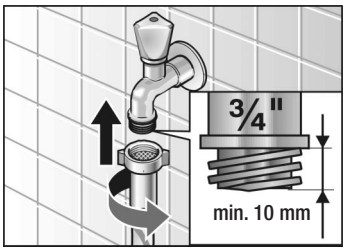

❑ To the water tap.

❑ After connection:
Turn on the water tap completely and check that the connection points are water-tight.

Water drainage

Caution
Do not bend or pull the water drainage hose.

Height difference between the placement area and drainage point: Minimum 60 cm, maximum 100 cm.

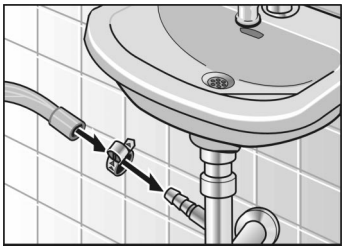

Drainage into a siphon:

❑ Secure the connection point with a hose band clip of 24-40 mm dia. (from specialist store).

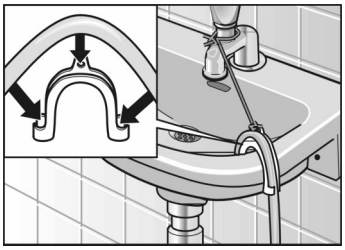

Drainage into a wash basin:

Caution
The plug must not block the drain of the wash basin.

❑ Secure the water drainage hose so that it does not slide out.

❑ When water is being drained, check that the water flow is fast enough.

Levelling procedure

All four appliance feet must be firmly on the ground. The washing machine must not wobble.

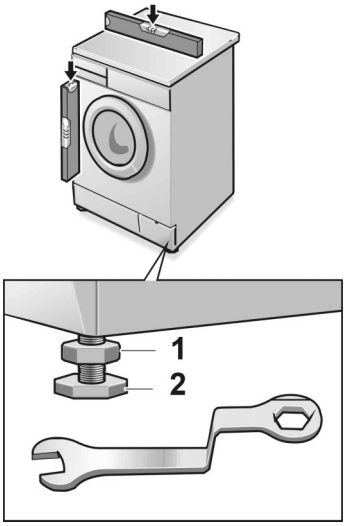

Level the washing machine with the assistance of the four adjustable feet and a spirit level:

❑ Loosen the counter-nut **1** using the wrench.

❑ Adjust the height by means of turning the appliance foot **2**.

❑ Tighten the counter-nut.

Electrical connection

Caution
The washing machine must only be connected to alternating current and using a properly installed socket outlet with earthing contact.

The mains voltage must correspond to the voltage specification on the washing machine (nameplate). Connection specifications as well as the required fuses are stipulated on the appliance nameplate.

Make sure that:

- the mains plug fits the socket outlet.
- the cable cross-section is permissible.
- the earthing system is properly installed.

Replacing the mains cable (where necessary) must only be carried out by an authorized electrician. Replacement mains cables can be obtained from the Customer Service.

Do not use multiple plugs / connectors or extension cables.

In the event that an earth-leakage circuit breaker is to be used, only use types marked with the following symbol: . Only this symbol can guarantee compliance with all current regulations.

Do not insert / remove the mains plug with wet or damp hands.

Handle the plug body only when removing the plug from the socket.

Transport, e.g. when moving

Before transporting the washing machine:

- Turn off the water tap,
- Drain any residual washing solution (refer to Page 17),
- Release the water pressure in the supply hose (refer to Page 18),
- Disconnect the washing machine from the mains.
- Dismantle the supply and drainage hose,
- Install the transport bolts.

Having transported the appliance and ensured proper installation and connection, allow the "Drain" programme to run through before starting the first wash programme.

Preparing and inserting the transport bolts

❑ Remove the covers.

❑ Preparing the transit bolt:
Pull the bolt out of the sleeve until the end of the bolt is flush with the end of the sleeve.

❑ Insert and tighten the bolts.
The lug on the washer must be located in the groove in the rear panel of the housing.

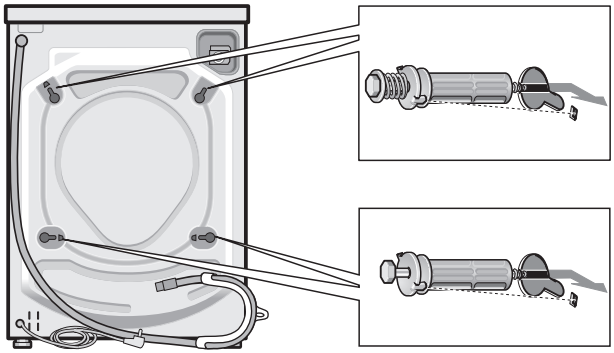

ROBERT BOSCH HAUSGERÄTE GMBH

0403 en
5550 009 375