BOSCH

Register your new device on MyBosch now and get free benefits:
bosch-home.com/welcome

MyBosch

MultiTalent 3
Compact food processor

MCM3...AU

[en] Instruction manual Compact food processor

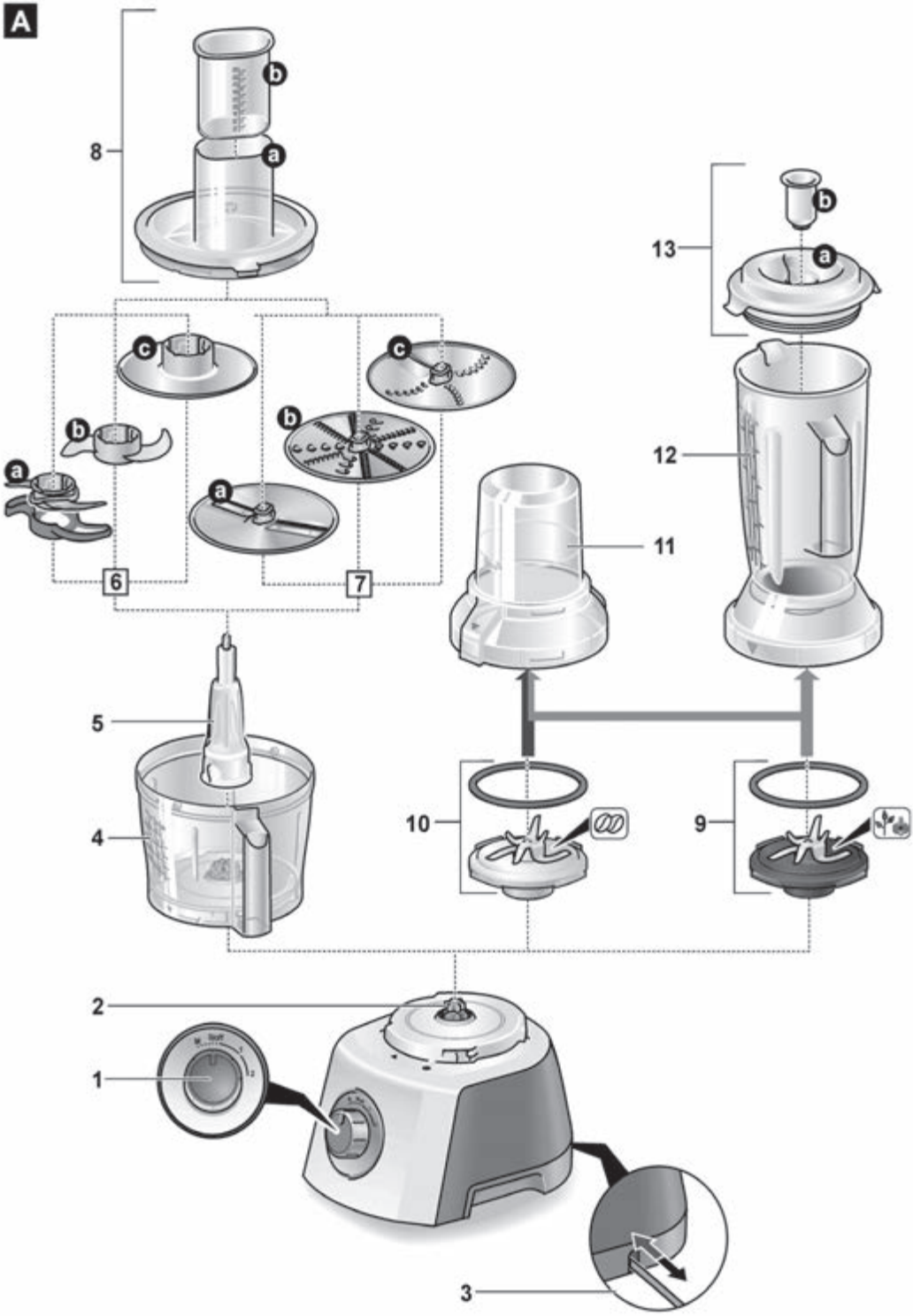
A
8
b
a
13
b
a
c
c
b
b
a
a
12
11
6
7
5
4
10
9
2
1
3

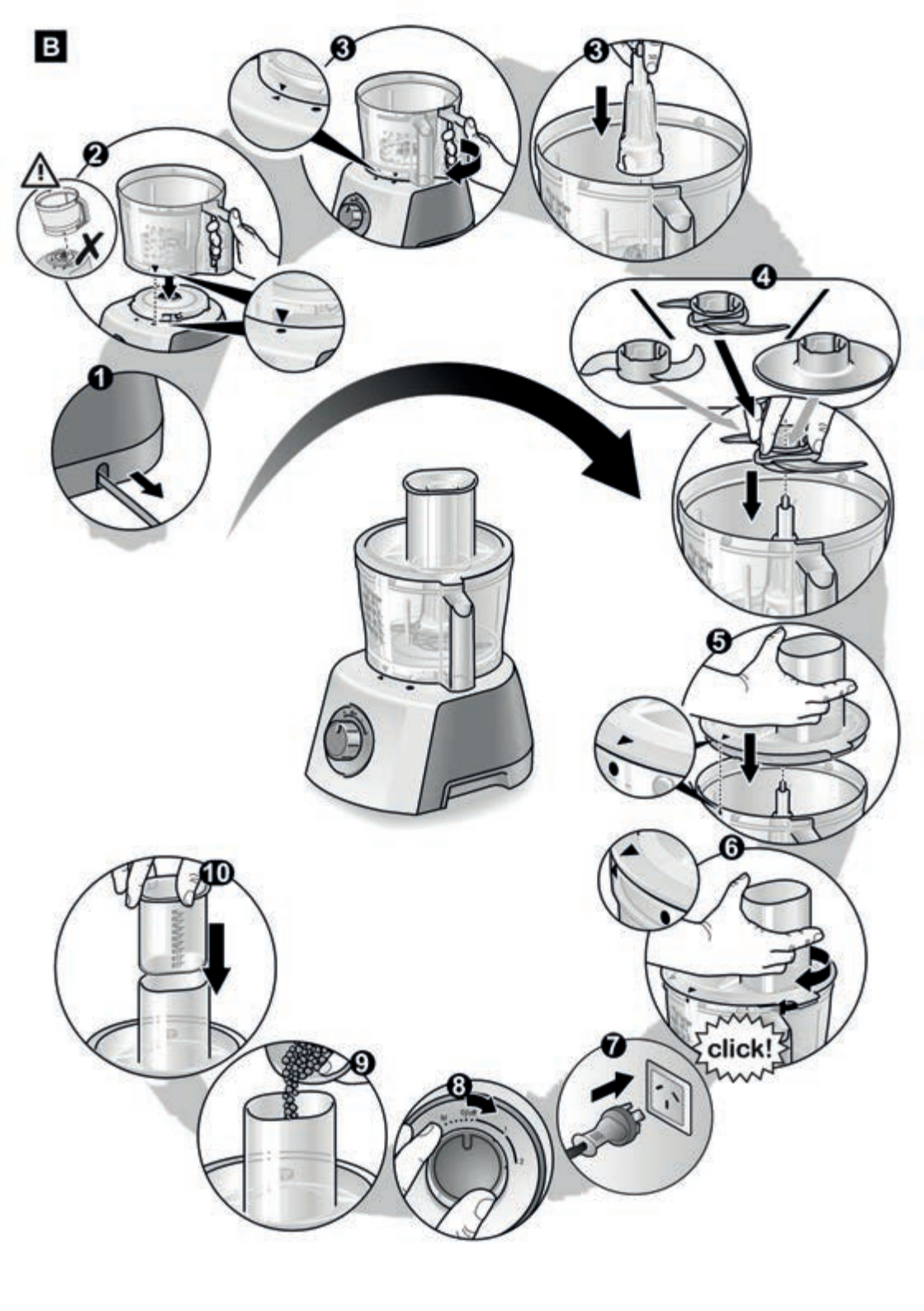
B
1
2
3
3
4
5
6
click!
7
8
9
10

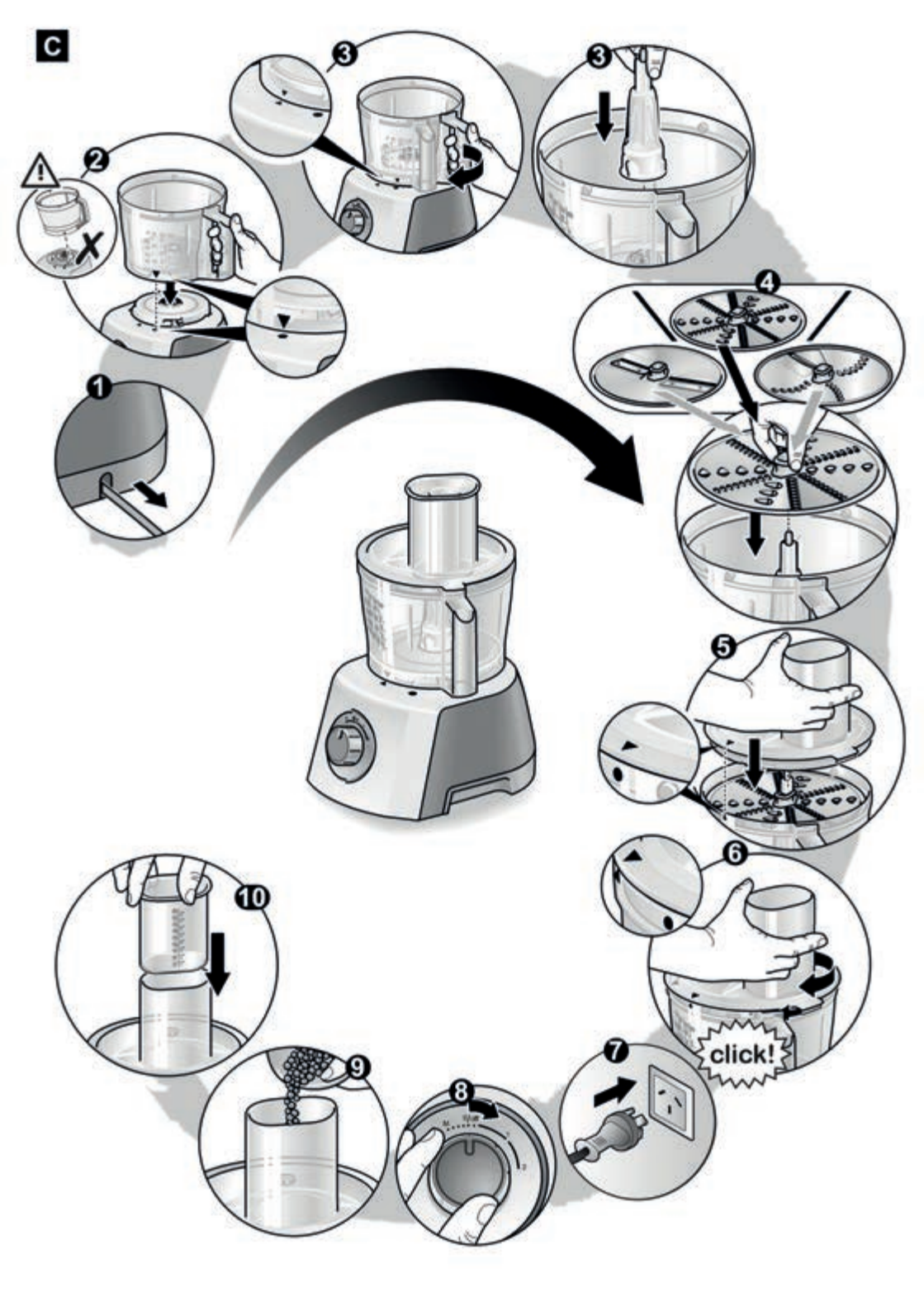
C
1
2
3
3
4
5
6
click!
7
8
9
10

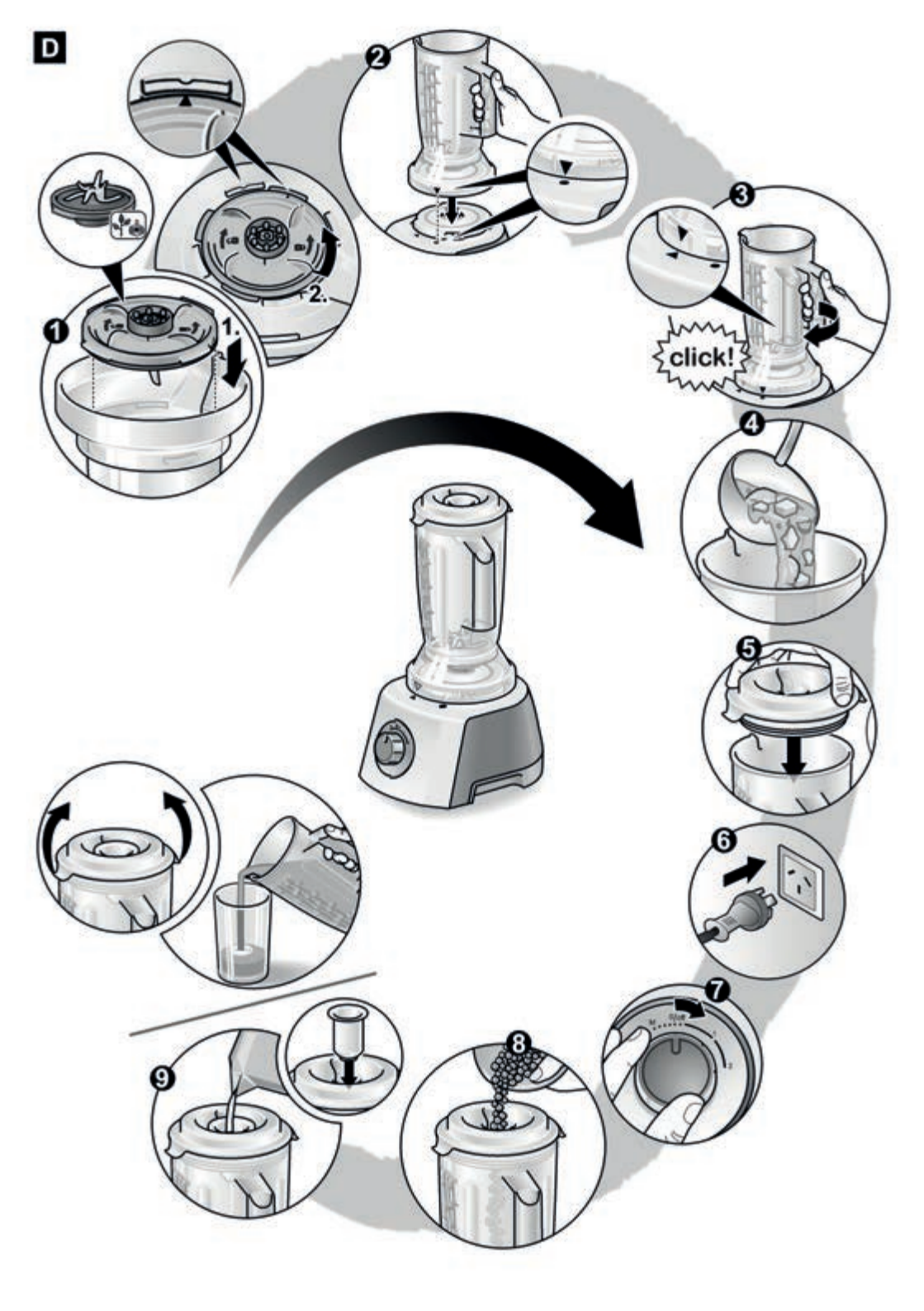
D
1
1.
2.
2
3
click!
4
5
6
7
8
9

E

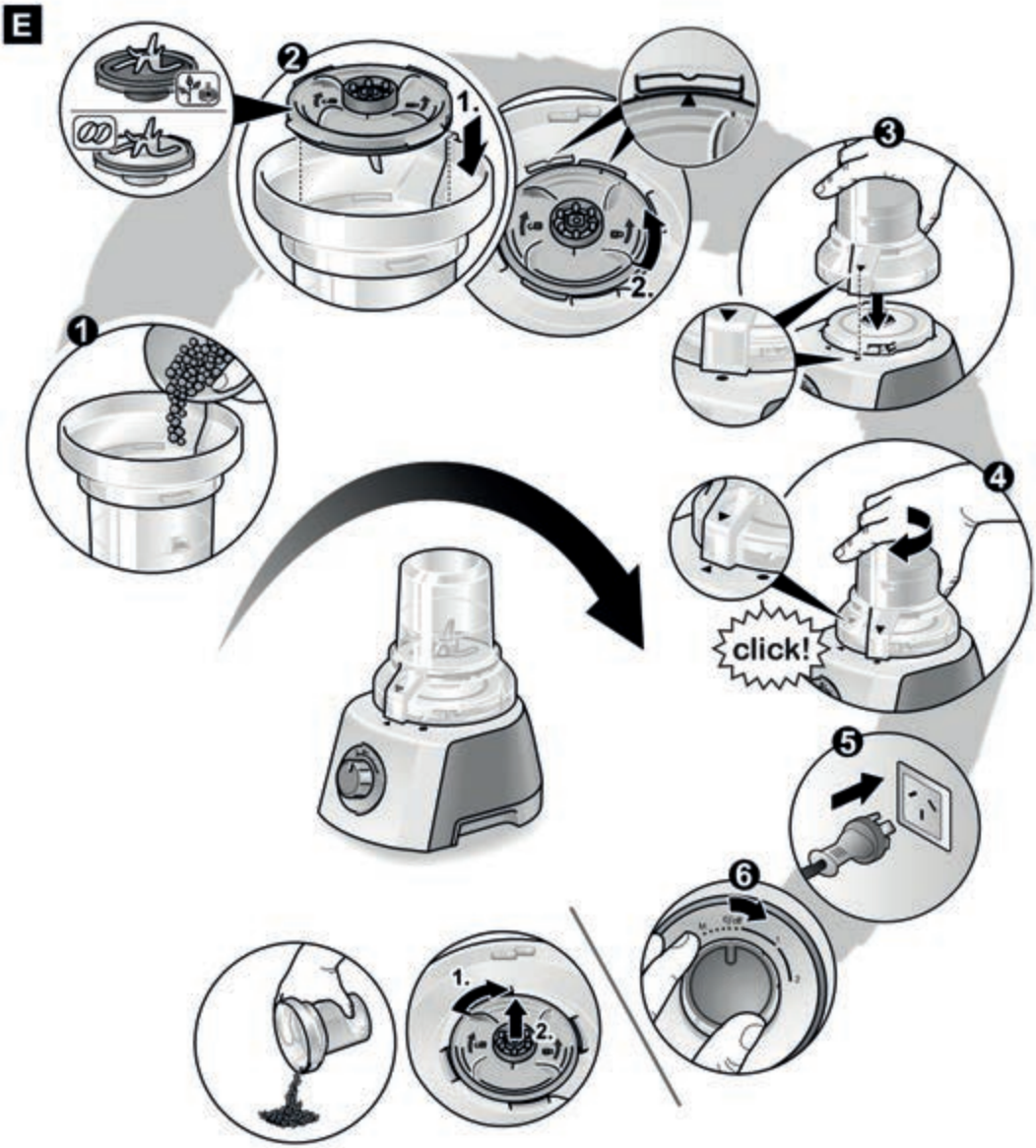

F

			MAX		
(1 cm)		X	120 g	15 s	2
(1 cm)		X	100 g	5-15 s	2
		X	50 g	(1-3) x 1 s	M
		X	15 x	(2-5) x 1 s	M
		X	10 g	(2-5) x 1 s	M
		X	50 g	(4-10) x 1 s	M
	X		60 g	40-60 s	2
	X		100 g	40-60 s	2
	X		50 g	40-60 s	2

G

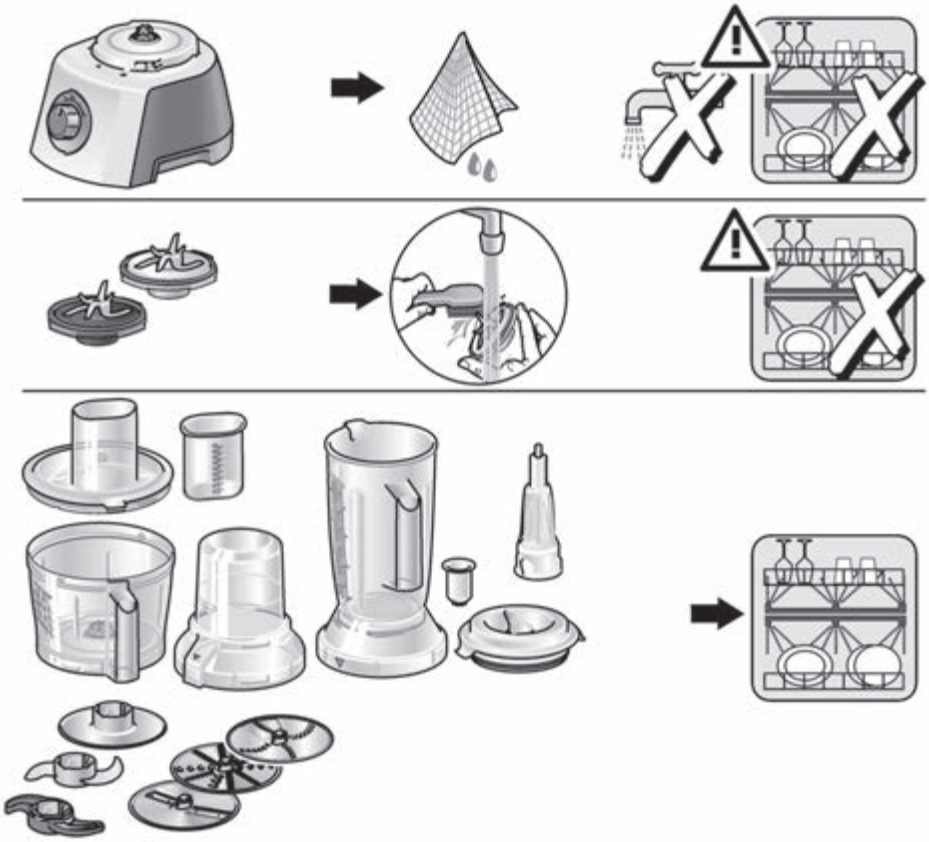

H

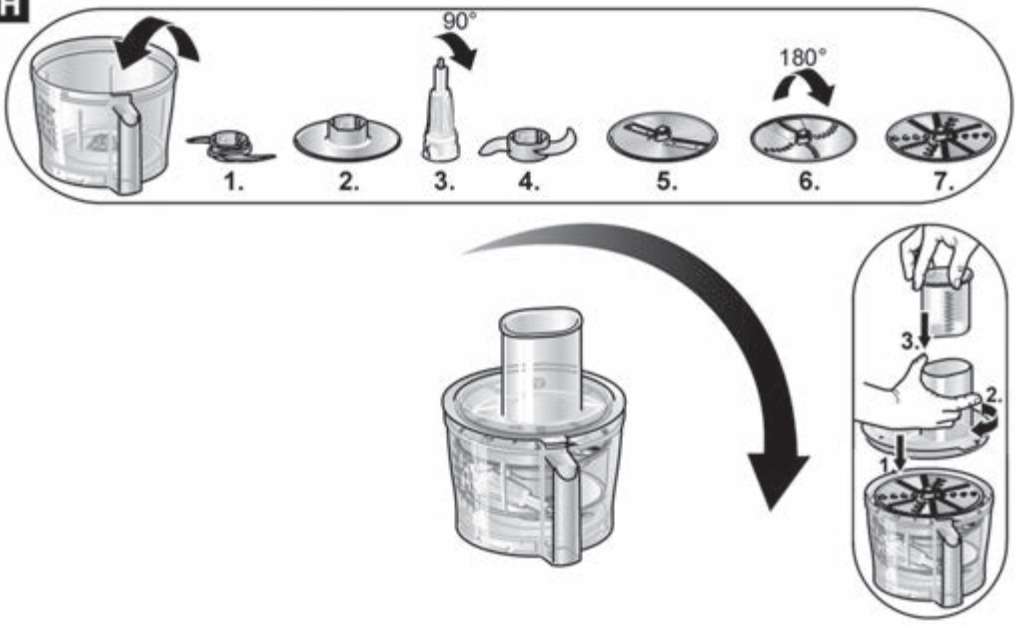

I

MCM3501MAU	✔	✔	✔	✔	✔	✔	✔	

MCM3501MAU	✔	✔	✔	✔

Intended use

This appliance is intended for domestic use and the household environment only. Use the appliance only for processing normal amounts of food and for normal amounts of time in domestic use. The appliance is suitable for mixing, kneading, beating, cutting and shredding food. The appliance must not be used for processing other substances or objects. Additional applications are possible if other accessories approved by the manufacturer are used. Only use the appliance with approved genuine parts and accessories. Never use the accessory parts for other appliances.
Only use the appliance indoors at room temperature and up to 2000 m above sea level.

Important safety notices

Read and follow the instruction manual carefully and keep for later reference! Enclose these instructions when you give the appliance to someone else. If the instructions for correct use of the appliance are not observed, the manufacturer's liability for any resulting damage will be excluded.
This appliance can be used by persons with reduced physical, sensory or mental capabilities or lack of experience and / or knowledge if they are given supervision or instruction concerning use of the appliance in a safe way and if they understand the hazards involved. Keep children away from the appliance and connecting cable and do not allow them to use the appliance. Do not let children play with the appliance. Cleaning and user maintenance must not be performed by children.
Connect and operate the appliance only in accordance with the specifications on the rating plate. Do not use the appliance if the power cord and/or appliance are damaged.
Before replacing accessories or additional parts, which move during operation, switch off the appliance and disconnect from the power supply. Always disconnect the appliance from the supply if it is left unattended and before assembling, disassembling or cleaning.
Do not place the power cord over sharp edges or hot surfaces.
To prevent injury, a damaged power cord must be replaced by the manufacturer or his customer service or a similarly qualified person.
Only our customer service may repair the appliance.

Safety instructions for this appliance

⚠ Risk of injury

⚠ Risk of electric shock

If the power is interrupted, the appliance remains switched on and restarts when the power is restored.
Never immerse the base unit in liquids or place under running water and do not clean in the dishwasher.
Before rectifying a fault, pull out the mains plug.

⚠ Risk of injury from the rotating tools!

While the appliance is operating, never place fingers in the mixing bowl. Always use the pusher for adding ingredients.
After switching off, the drive continues running for a short time. Change tools only when the drive is at a standstill.

⚠ Risk of injury from sharp blades/rotating drive!

Never reach into the attached blender jug!
Do not remove/attach the blender jug until the drive has stopped. Do not remove/attach the universal cutter jug until the drive has stopped.

⚠ Risk of injury from sharp blades!

Do not touch blades of the universal blade with bare hands. When not in use, always store the universal blade in the blade guard. Clean them with a brush.
Do not grip the sharp blades or edges of the cutting discs. Grip the discs by the plastic part in the centre only!
Do not place fingers in the feed tube. Only use the pusher when adding more ingredients. Do not touch blades of the blade insert with bare hands. Clean them with a brush.

⚠ Risk of scalding!

If processing hot liquids, steam escapes through the funnel in the lid. Add a max. 0,4 litres of hot or frothing liquid.

⚠ Risk of injury!

Never assemble accessories on the base unit.

⚠ Important!

It is essential to clean the appliance thoroughly after each use or after it has not been used for an extended period. ➔ *“Cleaning and servicing” see page 15*

Explanation of the symbols on the appliance or accessory

	Caution! Rotating tools. Do not place fingers in the feed tube.
	Lock blade insert in the blender or universal cutter jug.
	Remove blade insert from the blender or universal cutter jug.
	Blade insert with blender/cutting blade
	Blade insert with grinding blade

Congratulations on the purchase of your new Bosch appliance. You can find further information about our products on our website.

Contents

Intended use 10
Important safety notices..... 10
Overview 12
Operation 12
Cleaning and servicing..... 15
Troubleshooting 16
Storage..... 16
Disposal..... 16
Guarantee 16
Recipes / Ingredients / Processing 17

Overview

The instructions describe different features of the appliance. **Figure I** shows an overview of the model.

Fig. A
Base unit

1 Rotary switch
0/off = Stop
M = Instantaneous switching at maximum speed, hold switch for required blending duration.
Settings 1–2, Operating speed:
1 = low speed – slow,
2 = high speed – fast.

2 Drive

3 Cord store

4 Bowl

5 Tool holder

6 Tools*
- **a** Universal blade with blade guard
- **b** Kneading hook
- **c** Beating disc

7 Cutting discs*
- **a** Slicing reversible disc – thick/thin
- **b** Shredding reversible disc – coarse/fine
- **c** Reversible slicing/shredding disc

8 Lid
- **a** Filler opening
- **b** Pusher

Accessories*

9 Blade insert with blender/cutting blade and seal

10 Blade insert with grinding blade and seal

11 Universal cutter jug

12 Blender jug

13 Lid for blender
- **a** Filler opening
- **b** Funnel-shaped stopper

* for some models

If the universal cutter is not included, it can be ordered from customer service (order no. 12005833).

Operation

Before operating the appliance and accessories for the first time, clean thoroughly; see “Cleaning and servicing”.

Preparation

- Place the base unit on a smooth, clean surface.
- Pull cable out of the base unit to the required length.

Important information

– Use only the rotary switch to switch the appliance on or off.
– Never switch the appliance off by rotating the bowl, the blender or a tool.
– Do not switch the appliance on unless tools or accessories have been completely attached.

Bowl with accessories/tools

⚠ **Risk of injury from the rotating tools!**
While the appliance is operating, never place fingers in the mixing bowl. Always use the pusher for adding ingredients. After switching off, the drive continues running for a short time. Change tools only when the drive is at a standstill.

Warning!
When working with the bowl, the appliance cannot be switched on until the bowl has been attached and the lid has been attached and screwed on tight.

Universal blade

for cutting, mincing, mixing.

⚠ **Risk of injury from sharp blades!**
Do not touch blades of the universal blade with bare hands. When not in use, always store the universal blade in the blade guard. Grip the universal blade by the edge of the plastic handle only.

Kneading hook

for kneading dough and mixing-in ingredients that ought not be cut (e.g. raisins and chocolate chips).

Beating disc

for cream, egg white and mayonnaise.

Fig. B

- Attach the bowl (arrow on bowl on dot on the appliance ⏷●) and rotate as far as possible in a clockwise direction (⏷▲).
- Insert tool holder into the bowl.
- Insert universal blade, whisking disc or kneading hook into the tool holder and release.
  Note position of the tools when inserting them! Press tools all the way down.

Warning!
Do not add ingredients until the tools have been inserted.

- Add ingredients.
- Attach lid with pusher (match arrow on lid on dot on bowl ⏷●) and rotate in a clockwise direction (⏷▲). Lid lug must be located fully in the slot in the bowl handle.
- Insert the mains plug.
- Set the rotary switch to the desired setting.
- To add more ingredients, set the rotary switch to **0/off**.
- Remove the pusher and add ingredients through the feed tube. Pusher can be used as a measuring cup.

Cutting discs

⚠ **Risk of injury from sharp blades!**
Do not grip the sharp blades or edges of the cutting discs. Grip the discs by the plastic part in the centre only! Do not place fingers in the feed tube. Only use the pusher when adding more ingredients.

Slicing reversible disc – thick/thin

for slicing fruit and vegetables.
Process at setting 1.

Identification on the reversible slicing disc:
“grob” for the thick cutting side,
“fein” for the thin cutting side

Warning!
The reversible slicing disc is not suitable for slicing hard cheese, bread, rolls or chocolate. Slice boiled, waxy potatoes only when they are cold.

Shredding reversible disc – coarse/fine

for shredding vegetables, fruit and cheese, except for hard cheese (e.g. Parmesan).
Process at setting 1.

Designation on the reversible shredding disc:
“2” for the coarse shredding side
“4” for the fine shredding side

Warning!
The reversible shredding disc is not suitable for shredding nuts. Shred soft cheese with the coarse side only at setting 2.

Reversible slicing/shredding disc
for slicing and shredding fruit, vegetables and cheese.
Process at setting 2.

Note: Do not process any hard foods using the slicing/grating reversible disc as this may blunt the blade. Use the slicing reversible disc (thick/thin) for this purpose.

Fig. C

- Attach the bowl (arrow on bowl on dot on the appliance) and rotate as far as possible in a clockwise direction ( ).
- Insert tool holder into the bowl.

Depending on the required use:

- Place cutting disc on tool holder. Turn required slicing/shredding side face up. Place disc on the disc holder so that the drivers on the tool holder grip the opening in the discs.
- Attach lid with pusher (match arrow on lid on dot on bowl) and rotate in a clockwise direction ( ). Lid lug must be located fully in the slot in the bowl handle.
- Insert the mains plug.
- Set the rotary switch to the desired setting.
- Fill with contents which are to be sliced or shredded.
- When adding contents which are to be sliced or shredded, apply only light pressure to the pusher. Remove the pusher and add ingredients through the feed tube.

Warning!
Empty the bowl before it becomes so full that the cutting or grating contents reach the carrier disc.

After using the appliance

- Set the rotary switch to **0/off**.
- Remove mains plug.
- Rotate the lid in an anti-clockwise direction and remove.
- Remove tool:
  Take tool holder together with universal blade, whisking disc or kneading hook out of the bowl. Remove the tools from the tool holder.
- Take out the cutting discs by the plastic stud in the centre. Take tool holder out of the bowl.
- Rotate bowl anti-clockwise and remove.
- Clean all parts, see “Cleaning and servicing”.

Blender

Blade insert with blender/cutting blade for mixing liquid or semi-solid food, for cutting/chopping raw fruit and vegetables, for puréeing food.

⚠ Risk of injury from sharp blades / rotating drive!
Never place fingers in the attached blender! Do not remove/attach the blender until the drive is at a standstill. Do not touch blades of the blade insert with bare hands. Clean them with a brush.

⚠ Risk of scalding!
If processing hot liquids, steam escapes through the funnel in the lid. Add a max. 0,4 litres of hot or frothing liquid.

Warning!
Blender may be damaged. Do not process deep-frozen ingredients (except ice cubes). Do not operate blender when empty.

Fig. D

- Place seal on the blade insert. Ensure that the seal is positioned correctly.

Important information
If the seal is damaged or not correctly positioned, liquid may run out.

- Insert blade insert with blender/cutting blade into the blender jug and lock anti-clockwise ( ). Rotate the blade insert at least until the arrow matches up with the marking on the blender jug.
- Turn blender jug over (blade insert face down).
- Attach the blender jug (match arrow on the jug to the dot on the appliance) and rotate as far as possible in a clockwise direction ( ).

- Add ingredients.
  Maximum capacity, liquid = 1.0 litres (frothing or hot liquids max. 0.4 litres).
  Optimal processing capacity – solids = 80 g.
- Attach lid and press firmly. Hold lid while working.
- Insert the mains plug.
- Set the rotary switch to the desired setting.
- To add more ingredients, set the rotary switch to **0/off**.
- Remove the lid and add ingredients

or

- remove the funnel and gradually add solid ingredients through the refill opening

or

- pour liquid ingredients through the funnel.

After using the appliance

- Set the rotary switch to **0/off**.
- Remove mains plug.
- Rotate the blender in an anti-clockwise direction and remove.
- Remove lid.
- Loosen blade insert clockwise (🔓) and remove from the blender jug.
- Clean all parts, see “Cleaning and servicing”.

Universal cutter

Use (depending on model):

– With the blade insert with blender/cutting blade for cutting and chopping meat, hard cheese, onions, herbs, garlic, fruit, vegetables.

– With the blade insert with grinding blade for grinding and cutting fairly small quantities of spices (e.g. pepper, cumin, juniper, cinnamon, dried anise, saffron), grain (e.g. wheat, millet, linseeds), coffee and sugar. It is not intended for grinding very dry, solid foods larger than coffee beans such as nutmeg, dry ginger … .

⚠ **Risk of injury from sharp blades / rotating drive!**

Do not remove/attach the universal cutter until the drive has stopped. Do not touch blades of the blade insert with bare hands.

Fig. F shows guide values for the maximum quantities and processing times when working with the universal cutter.

Fig. E

- Put down universal cutter jug with the opening face up.
- Add food, which is to be cut, in the jug. Note **MAX** mark on the jug!
- Place seal on the blade insert. Ensure that the seal is positioned correctly.

Important information

If the seal is damaged or not correctly positioned, liquid may run out.

- Insert blade insert (/) into the universal cutter jug and lock anti-clockwise (🔓). Rotate the blade insert at least until the arrow matches up with the marking on the universal cutter jug.
- Turn universal cutter over (blade insert face down).
- Attach the universal cutter (arrow on jug on dot on the appliance) and rotate all the way clockwise ( ).
- Insert the mains plug.
- Set the rotary switch to the desired setting.

Note: The longer the appliance remains switched on, the finer the ingredients are cut. Recommendations on using the accessories can be found in the section “Recipes/ Ingredients/Processing”.

After using the appliance

- Set the rotary switch to **0/off**.
- Remove mains plug.
- Rotate universal cutter anti-clockwise and remove.
- Turn universal cutter over (blade insert face up).
- Loosen blade insert clockwise (🔓) and remove from the universal cutter jug.
- Empty jug.
- Clean all parts, see “Cleaning and servicing”.

Cleaning and servicing

The appliance requires no maintenance. Thorough cleaning protects the appliance from damage and keeps it functional.
An overview of cleaning the individual parts can be found in **Fig. G**.

⚠ **Risk of electric shock**
Never immerse the base unit in water or place under running water.

Warning!
Surfaces may be damaged. Do not use abrasive cleaning agents.

Note: If processing e.g. carrots and red cabbage, the plastic parts will become discoloured by a red film which can be removed with a few drops of cooking oil.

Cleaning the base unit

- Remove mains plug.
- Wipe the base unit with a damp cloth. If required, use a little detergent.
- Then dry the base unit.

Cleaning the bowl and accessories

⚠ **Risk of injury from sharp blades!**
Do not touch blades of the universal blade with bare hands. When not in use, always store the universal blade in the blade guard. Clean them with a brush. Do not grip the sharp blades or edges of the cutting discs. Grip the discs by the plastic part in the centre only!

All parts are dishwasher-proof. Do not wedge plastic parts in the dishwasher as they could warp.

Cleaning the blender / universal cutter

⚠ **Risk of injury from sharp blades!**
Do not touch blades of the blade insert with bare hands. Clean them with a brush.

The blender jug (without blade insert), lid and funnel are dishwasher-proof.
Do not clean the blade insert in the dishwasher, but under running water (do not soak in water). Remove seal for cleaning.

Troubleshooting

⚠ **Risk of injury!**
Before rectifying a fault, pull out the mains plug.

Fault:
Appliance does not start or appliance switches off during operation.

Possible cause:
Bowl or lid or the accessory has not been attached correctly or has become detached.

Remedial action:
- Set the rotary switch to **0/off**.
- Correctly attach bowl/lid or accessory and screw on all the way.
- Switch the appliance on again.

Important information
If the fault cannot be eliminated, please contact customer service (see customer service addresses at the end of this booklet).

Storage

Fig. H
The tools can be stored in the bowl to save space.

Disposal

Dispose of packaging in an environmentally-friendly manner. This appliance is labelled in accordance with European Directive 2012/19/EU concerning used electrical and electronic appliances (waste electrical and electronic equipment – WEEE). The guideline determines the framework for the return and recycling of used appliances as applicable throughout the EU. Please ask your specialist retailer about current disposal facilities.

Guarantee

The guarantee conditions for this appliance are as defined by our representative in the country in which it is sold. Details regarding these conditions can be obtained from the dealer from whom the appliance was purchased. The bill of sale or receipt must be produced when making any claim under the terms of this guarantee.

Changes reserved.

Recipes / Ingredients / Processing

Tool	Speed	Time	Recipes / Ingredients / Processing
or	low	approx. 1-2 min	**Yeast dough** – Max. 500 g flour – 25 g yeast or 1 packet of dried yeast – 220 ml milk (room temperature) – 1 egg – 1 pinch of salt – 80 g sugar – 60 g butter – Graded rind of half a lemon ■ Add all ingredients (except the milk) to the bowl. ■ Set rotary switch to a low speed for 10 seconds. ■ Add milk and stir at low speed for about 1½ minutes. Ingredients should be at the same temperature. When the dough has a smooth appearance, place in a warm location.
	M		**Onions, garlic** – from 1 onion, quartered, up to 300 g – from 1 clove of garlic up to 300 g ■ Process until it has been chopped to the required size.
	high		**Hard cheese (e.g. parmesan)** – 10 g to 200 g ■ Cut the cheese into cubes. ■ Process until it has been chopped to the required size.
	high		**Chocolate** – 50 g to 200 g ■ Cut or break the chocolate into pieces. ■ Process until it has been chopped to the required size.
	high		**Parsley** – 10 g to 50 g ■ Process until it has been chopped to the required size.
	high		**Meat, liver** (for mince, steak tartare, etc.) – 50 g to 500 g ■ Remove bones, gristle and sinews. Dice the meat. Making sausage meat, stuffing and pâté: ■ Put meat (beef, pork, veal, poultry, or even fish, etc.) together with other ingredients and spices into the bowl and mix into a dough.
	high	approx. 1.5-2 min	**Strawberry sorbet** – 250 g frozen strawberries – 100 g icing sugar – 180 ml cream ■ Put all ingredients in the bowl. Switch on immediately, otherwise the mixture will go lumpy. Mix until a creamy sorbet forms.
	low		**Beaten egg white** – 2 to 6 egg whites ■ Beat at a low speed.

Tool	Speed	Time	Recipes / Ingredients / Processing
	high		**Whipped cream** – 200 g to 400 g ■ Whisk at high speed.
	low/ high		**Mayonnaise** – 1 egg – 1 tsp. mustard – 150-200 ml oil – 1 tbs. lemon juice or vinegar – 1 pinch of salt – 1 pinch of sugar Ingredients should be at the same temperature. ■ Mix all ingredients (except oil) for several seconds at setting 1. ■ Switch appliance to setting 2, slowly pour oil through the feed tube and mix until the mixture emulsifies. **Eat the mayonnaise immediately, do not store.**
	high/**M**		**Nuts, almonds** – 50 g to 200 g ■ Remove shells completely, otherwise the blender blade will be blunted. ■ Process until it has been chopped to the required size.
	high/**M**		**Puréeing fruit or vegetables** – Apple sauce, spinach, carrot and tomato purée; raw or cooked ■ Put ingredients and spices into the blender and purée.
	high		**Chocolate-milk** – 80 g–100 g cooled chocolate – approx. 400 ml hot milk ■ Chop up the chocolate in the blender, add the hot milk and mix briefly.
	M		**Honey and hazel nut spread (CNCM12C)** – 20 g hazelnuts – 80 g blossom honey (room temperature) ■ Put the nuts in the universal cutter jug and cut with the blender/ cutting blade for 5 seconds on setting **M**. ■ Remove the universal cutter jug, turn it over and take out the blade insert. ■ Add the honey. Close the universal cutter jug again with the blade and put on the base unit. ■ Wait until all the honey has run down over the blade. Then mix everything for 5 seconds on setting **M**.
	Fig. F shows guide values for the maximum quantities and processing times when working with the universal cutter jug and the blade inserts.		

Kundendienst – Customer Service

DE Deutschland, Germany
BSH Hausgeräte Service GmbH
Zentralwerkstatt für kleine Hausgeräte
Trautskirchener Strasse 6-8
90431 Nürnberg

Online Auftragsstatus, Filterbeutel-Konfigurator und viele weitere Infos unter:
www.bosch-home.com

Reparaturservice, Ersatzteile & Zubehör, Produkt-Informationen:
Tel.: 0911 70 440 040
mailto:cp-servicecenter@bshg.com

AE United Arab Emirates, الإمارات العربيّة المتّحدة
BSH Home Appliances FZE
Round About 13, Plot Nr MO-0532A
Jebel Ali Free Zone - Dubai
Tel.: 04 881 44 01*
mailto:service.uae@bshg.com
www.bosch-home.com/ae
* Sun-Thu 8am to 5pm (exclude public holidays)

AL Republika e Shqiperise, Albania
Elektro-Service sh.p.k
Rruga Kasem Shima, Kodi postar-1050
Prane Ures Mezezit
1023 Tirane
Tel.: 4 227 8130; -131
mailto:info@elektro-servis.com

EXPERT Service
Rruga e Kavajes,
Kulla B Nr 223/1 Kati I
1023 Tirane
Tel.: 4 480 6061; 4 227 4961
Cel: +355 069 60 45555
mailto:info@expert-servis.al

AM Armenia, Հայաստան
ZIG ZAG LLC
Charenci str. 25
Yerevan 375025
Tel.: 010 55 60 10
mailto:service@zigzag.am
www.zigzag.am

AT Österreich, Austria
BSH Hausgeräte Gesellschaft mbH
Werkskundendienst für Hausgeräte
Quellenstrasse 2a
1100 Wien

Online Reparaturannahme, Ersatzteile und Zubehör und viele weitere Infos unter: www.bosch-home.at
Reparaturservice, Ersatzteile & Zubehör, Produktinformationen
Tel.: 0810 550 511
mailto:vie-stoerungsannahme@bshg.com
Wir sind an 365 Tagen rund um die Uhr für Sie erreichbar.

AU Australia
BSH Home Appliances Pty. Ltd.
Gate 1, 1555 Centre Road
Clayton, Victoria 3168
Tel.: 1300 369 744*
mailto:customersupport.au@bshg.com
www.bosch-home.com.au
* Mo-Fr: 24 hours

AZ Azärbaycan Respublikası, Azerbaijan
Baku Service Company MMC
Azadliq Pr. 116
Baku
Tel.: 12 530 90 35
mailto:info@ser-cen.az
www.ser-cen.az

Yurd Service MMC
50, Bakikhanov Str.
Baku, AZ1007
Tel.: 12 480 33 01
mailto:info-service@yurd.az
www.yurd.az

Optimal Elektronika MMC
Hasanoghlu 7B
Baku, AZ1072
Tel.: 12 954
mailto:xanim.muradova@optimal.az
www.optimal.az

BA Bosna i Hercegovina, Bosnia-Herzegovina
"HIGH" d.o.o.
Gradačačka 29b
71000 Sarajevo
Tel./Fax: 033 21 35 13
mailto:centralniservis@yahoo.com

BE Belgique, België, Belgium
BSH Home Appliances S.A. – N.V.
Avenue du Laerbeek 74
Laarbeeklaan 74
1090 Bruxelles – Brussel
Tel.: 02 475 70 01
mailto:bru-repairs@bshg.com
www.bosch-home.be

BG Bulgaria
BSH Domakinski Uredi Bulgaria EOOD
Business center FPI, floor 5,
Cherni vrah Blvd. 51B
1407 Sofia
Tel.: 0700 208 17
mailto:informacia.servis-bg@bshg.com
www.bosch-home.bg

BH Bahrain, مملكة البحرين
Khalaifat Est.
BLD 898, R 533, TASHAN 405
Manama
Tel.: 01 740 05 53*
mailto:service@khalaifat.com
* Sat-Thu 7am to 5pm (exclude public holidays)

BY Belarus, Беларусь
ООО "БСХ Бытовая техника"
тел.: 495 737 2961
mailto:mok-kdhl@bshg.com

CA Canada
BSH Home Appliances Ltd.
Tel.: 800 554 9043
www.bosch-home.ca

CH Schweiz, Suisse, Svizzera, Switzerland
BSH Hausgeräte AG
Bosch Hausgeräte Service
Fahrweidstrasse 80
8954 Geroldswil

Reparaturservice, Ersatzteile & Zubehör, Produktinformationen
Tel.: 0848 888 200
mailto:ch-service@bshg.com
mailto:ch-spareparts@bshg.com
www.bosch-home.ch

CN China, 中国
BSH Home Appliances Service Jiangsu Co. Ltd.
19F, Jinling Asia Pacific Tower,
No.2 Hanzhong Road, Gulou District,
210005 Nanjing, Jiangsu Province
Service Tel.: 400 8855 888*
mailto:careline.china@bshg.com
www.bosch-home.cn
* phone rate depends on the network used

CY Cyprus, Κύπρος
BSH Ikiakes Syskeves-Service
39, Arh. Makaariou III Str.
2407 Egomi/Nikosia (Lefkosia)
Tel.: 777 78 007
mailto:EGO-CYCustomerService@bshg.com

CYN Turkish Rep. Of North Cyprus
Argas Limited Company
37 Osman Paşa Cad. K. Çiltlik
Lefkoşa
Tel.: 0228 40 70
mailto:argas.teknik@yar-group.com

Semson Ticaret Sti. Ltd.
Bedrettin Demirel Cad. no 17
Girne
Tel.: 0816 04 94
mailto:m.defterali@ercantangroup.com

CZ Česká Republika, Czech Republic
Více informací (např. záruční podmínky, prodloužená záruka aj.) naleznete na webových stránkách www.bosch-home.com/cz/ nebo nás kontaktujte na +420 251 095 511

BSH domácí spotřebiče s.r.o.
Radlická 350/107c
158 00 Praha 5
Tel.: +420 251 095 043
mailto:opravy@bshg.com
www.bosch-home.com/cz

DK Danmark, Denmark
BSH Hvidevarer A/S
Telegrafvej 4
2750 Ballerup
Tel.: 44 89 80 18
mailto:BSH-Service.dk@bshg.com
www.bosch-home.dk

EE Eesti, Estonia
SIMSON OÜ
Türi tn.5
11313 Tallinn
Tel.: 0627 8730
mailto:servicenet@servicenet.ee
www.simson.ee

Renerki Kaubanduse OÜ
Tammsaare tee 134B (Euronicsi kaupluses)
12918 Tallinn
Tel.: 0651 2222
mailto:klienditeenindus@renerk.ee
www.renerk.ee

Eliser OÜ
Mustamäe tee 24
10621 Tallinn
Tel.: 0665 0090
mailto:hooldus@eliser.ee
www.kodumasinate-remont.ee

ES España, Spain
BSH Electrodomésticos España S.A.
Servicio Oficial del Fabricante
Parque Empresarial PLAZA,
C/ Manfredonia, 6
50197 Zaragoza
Tel.: 976 305 713
mailto:CAU-Bosch@bshg.com
www.bosch-home.es

FI Suomi, Finland
BSH Kodinkoneet Oy
Itälahdenkatu 18 A, PL 123
00201 Helsinki
Tel.: 0207 510 705
mailto:Bosch-Service-FI@bshg.com
www.bosch-home.fi
Soittajahinta on kiinteästä verkosta ja matkapuhelimesta 8,35 snt/puh + 16,69 snt/min.

FR France
BSH Electroménager S.A.S.
50 rue Ardoin – CS 50037
93406 SAINT-OUEN cedex
Service interventions à domicile:
01 40 10 11 00
Service Consommateurs:
0 892 698 010 Service 0,40 € / min + prix appel
mailto:soa-bosch-conso@bshg.com
Service Pièces Détachées et Accessoires:
0 892 698 009 Service 0,40 € / min + prix appel
www.bosch-home.fr

GB Great Britain
BSH Home Appliances Ltd.
Grand Union House
Old Wolverton Road
Wolverton
Milton Keynes MK12 5PT
To arrange an engineer visit, to order spare parts and accessories or for product advice please visit
www.bosch-home.co.uk
or call Tel.: 0344 892 8979*
* Calls are charged at the basic rate, please check with your telephone service provider for exact charges.

GE Georgia, საქართველო
Elit Service Ltd.
Vake-Saburtalo district,
Intersection of Al. Kazbegi ave.
and Kavtaradze Str. 0186
Kavtaradze str. 1
Tbilisi
Tel.: 32 300 020
mailto:info@es.ge

GR Greece, Ελλάς
BSH Ikiakes Siskeves A.B.E.
Central Branch Service
17 km E.O. Athinon-Lamias & Potamou 20
14564 Kifisia
Τηλέφωνο: 210 4277 500; -701
mailto:nkf-CustomerService@bshg.com
www.bosch-home.gr

HK Hong Kong, 香港
BSH Home Appliances Limited
香港新界荃灣青山公路388號中染大廈23樓07室
Unit 07, 23/F, CDW Building,
388 Castle Peak Road,
Tsuen Wan, New Territories,
Hong Kong
Tel.: 2626 9655 (HK)
Toll free 0800 863 (Macao)
mailto:bosch.hk.service@bshg.com
www.bosch-home.com.hk

HR Hrvatska, Croatia
BSH kućanski uređaji d.o.o.
Ulica grada Vukovara 269F
10000 Zagreb
Tel.: 01 5520 888
mailto:informacije.servis-hr@bshg.com
www.bosch-home.com/hr

HU Magyarország, Hungary
BSH Háztartási Készülék Kereskedelm Kft.
Árpád fejedelem útja 26-28
1023 Budapest
Call Center: +06 80 200 201
mailto:BSH-szerviz@bshg.com
www.bosch-home.com/hu

IE Republic of Ireland
BSH Home Appliances Ltd.
M50 Business Park
Ballymount Road Upper
Walkinstown
Dublin 12
To arrange an engineer visit, to order spare parts and accessories or for product advice please call
Tel.: 01450 2655*
www.bosch-home.ie
* Calls are charged at the basic rate, please check with your telephone service provider for exact charges.

IL Israel
C/S/B/ Home Appliance Ltd.
1, Hamasger St.
North Industrial Park
Lod, 7129801
Tel.: 08 9777 222
mailto:csb-serv@csb-ltd.co.il
www.bosch-home.co.il

IN India, Bhārat, भारत
BSH Household Appliances Mfg. Pvt. Ltd.
Arena House, Main Bldg, 2nd Floor,
Plot No. 103, Road No. 12,
MIDC, Andheri East
Mumbai 400 093
Toll Free 1800 266 1880*
www.bosch-home.com/in
* Mo-Sat 8am to 8pm (exclude public holidays)

IS Iceland
Smith & Norland hf.
Noatuni 4
105 Reykjavik
Tel.: 0520 3000
www.sminor.is

IT Italia, Italy
BSH Elettrodomestici S.p.A.
Via. M. Nizzoli 1
20147 Milano (MI)
Tel.: 02 412 678 100
mailto:info.it@bosch-home.com
www.bosch-home.com/it

KG Kyrgyzstan, Кыргыз Республикасы
OcOO Alfa Systems
Jibek Jolu str. 40
Bishkek
Tel.: 0702 98 53 53
mailto:alfas-service@mail.ru

KR Republic Korea,
Daehan Minguk, 대한민국
Empel Co.,Ltd
1201 ACE Hightechcity 1-Dong 775
Gyeonglin-ro Yeongdeungpo-gu
Seoul
Tel.: 1899-4636
mailto:hsshim@empel.co.kr

Dongsuh Foods Corporation
Dongsuh Bldg., 324, Dongmak-ro, Mapo-gu
Seoul
Tel.: 080-023-9114
mailto:khjo@dongsuh.co.kr

KZ Kazakhstan, Қазақстан
BSH Home Appliances LLP
Dostyk 117/6,
Business Center “Khan Tengri”
Almaty
Hotline: 5454*
mailto:ALA-Service@bshg.com
* Toll free from mobile only

LB Lebanon, لبنان
Teheni, Hana & Co.
Boulevard Dora 4043 Beyrouth
P.O. Box 90449
Jdeideh, 1202 2040
Tel.: 01 255 211
mailto:Info@Teheni-Hana.com

LT Lietuva, Lithuania
Senuku prekybos centras UAB
Jonavos g. 62
44192 Kaunas
Tel.: 037 212 146
www.senukai.lt

UAB “AG Service”
R. Kalantos g. 32
52494 Kaunas
Tel.: 0700 556 55
mailto:servisas@agservice.lt
www.agservice.lt

Baltic Continent Ltd.
Lukšio g. 23
09132 Vilnius
Tel.: 870 055 595
mailto:info@balticcontinent.lt
www.balticcontinent.lt

UAB Emtoservis
Savanorių pr. 1 (Centrinė būstinė)
03116 Vilnius
Tel.: 870 044 724
mailto:svc@emtoservis.lt
www.emtoservis.lt

LU Luxembourg
BSH électroménagers S.A.
13-15, ZI Breedeweues
1259 Senningerberg
Tel.: 26 349 811
Reparaturen: lux-repair@bshg.com
Ersatzteile: lux-spare@bshg.com
www.bosch-home.com/lu

LV Latvija, Latvia
SIA “General Serviss”
Bulļu iela 70c
1067 Riga
Tel.: 067 42 52 32
mailto:info@serviscentrs.lv
www.serviscentrs.lv

BALTIJAS SERVISS
Brivibas gatve 201
1039 Riga
Tel.: 067 07 05 20; -36
mailto:info@baltijasserviss.lv
www.baltijasserviss.lv

Sia Elektronika-Serviss
Tadaiķu iela 4
1004 Riga
Tel.: 067 71 70 60
mailto:serviss@elektronika.lv
www.elektronika.lv

MD Moldova
S.R.L. “Rialto-Studio”
Площадь Дмитрия Кантемира, 1, этаж 3,
2069 Кишинев
тел.: (37322) 84 00 50, 84 00 54
mailto:service@rialto.md

ME Crna Gora, Montenegro
Elektronika komerc
Oktobarske revolucije 129
81000 Podgorica
Tel./Fax: 020 674 631
Mobil: 069 324 812
mailto:ekobosch.servis@t-com.me

MK Macedonia, Македония
GORENEC
Jane Sandanski 69 lok. 3
1000 Skopje
Tel.: 02 2454 600
Mobil: 070 233 689
mailto:gorenec@yahoo.com

MT Malta
Oxford House Ltd.
Notabile Road
Mriehel BKR 14
Tel.: 021 442 334
www.oxfordhouse.com.mt

MV Raajjeyge Jumhooriyyaa, Maledives
Lintel Investments and
Management Services Pvt. Ltd.
Ma. Maadheli, Majeedhee Magu
Malé
Tel.: 03 010 200
mailto:mohamed.zuhuree@lintel.com.mv
www.lintel.com.mv

NL Nederlande, Netherlands
BSH Huishoudapparaten B.V.
Taurusavenue 36
2132 LS Hoofddorp

Storingsmelding/Onderdelenverkoop:
Tel.: 088 424 4010
mailto:bosch-contactcenter@bshg.com
mailto:bosch-onderdelen@bshg.com
www.bosch-home.nl

NO Norge, Norway
BSH Husholdningsapparater A/S
Grensesvingen 9
0661 Oslo
Tel.: 22 66 05 54; -06 00
mailto:Bosch-Service-NO@bshg.com
www.bosch-home.no

NZ New Zealand
BSH Home Appliances Ltd.
Level 3, Air NZ Building,
Smales Farm Business Park
74 Taharoto Road, Takapuna
Auckland 0622
Tel.: 0800 245 700*
mailto:aftersales.nz@bshg.com
www.bosch-home.co.nz
* Mo-Fr 8.30am to 5pm (exclude public holidays)

PK Pakistan, پاکستان
MEGA Home Appliances
Plaza 46-A, Commercial Sector XX,
Phase 3, DHA
Lahore
Tel.: 0800-BOSCH (26724)*
Tel.: 42 371 32 682-5 Ext: 8005*
mailto:customer.care@megahome.pk
www.megahome.pk
* Mo-Sat 9am to 6pm (exclude public holidays)

PL Polska, Poland
BSH Sprzęt Gospodarstwa
Domowego sp. z o.o.
Al. Jerozolimskie 183
02-222 Warszawa
Centrala Serwisu
Tel.: +48 42 271 5555
mailto:Serwis.Fabryczny@bshg.com
www.bosch-home.pl

PT Portugal
BSHP Electrodomésticos,
Sociedade Unipessoal, Lda.
Rua Alto do Montijo, nº 15
2790-012 Carnaxide
Tel.: 214 250 730
mailto:bosch.electrodomesticos.pt@bshg.com
www.bosch-home.pt

RO România, Romania
BSH Electrocasnice srl.
Sos. Bucuresti-Ploiesti,
nr. 19-21, sect.1
13682 Bucuresti
Tel.: 021 203 9748
mailto:service.romania@bshg.com
www.bosch-home.ro

RU Russia, Россия
ООО «БСХ Бытовые Приборы»
Сервис от производителя
Малая Калужская, 15
119071 Москва
Тел.: 8 (800) 200 29 61
mailto:hotlineru@bshg.com
www.bosch-home.com

SA Kingdom Saudi Arabia, المملكة العربية السعودية
Abdul Latif Jameel Electronics and
Airconditioning Co. Ltd.
BOSCH Service centre, Kilo 5 Old Makkah Road
(Next to Toyota), Jamiah Dist.,
P.O. Box 7997
Jeddah 21472
Tel.: 800 127 9999*
mailto:ALJECC8@ALJ.COM
www.aljelectronics.com.sa
* Sat-Thu 8.00am to 11.00pm (exclude public holidays)

SE Sverige, Sweden
BSH Home Appliances AB
Landsvägen 32
169 29 Solna
Tel.: 0771 19 70 00 local rate
mailto:Bosch-Service-SE@bshg.com
www.bosch-home.se

SG Singapore, 新加坡
BSH Home Appliances Pte. Ltd.
38C Jalan Pemimpin, #01-01
Singapore 577180
Tel.: 6751 5000*
mailto:bshsgp.service@bshg.com
www.bosch-home.com.sg
* Mo-Fr 9am to 6pm, Sat 9am to 1pm
(exclude public holidays)

SI Slovenija, Slovenia
BSH Hišni aparati d.o.o.
Litostrojska 48
1000 Ljubljana
Tel.: 01 5830 700
mailto:informacije.servis-slo@bshg.com
www.bosch-home.com/si

SK Slovensko, Slovakia
Viac informácií (napr. záručné
podmienky, predĺžená záruka a i.) nájdete
na webových
ránkach www.bosch-home.com/sk/ alebo
nás kontaktujte na +420 251 095 511

BSH domácí spotřebiče s.r.o.
organizačná zložka Bratislava
Trnavská cesta 50
821 02 Bratislava
Príjem opráv
Tel.: +421 238 106 115
mailto:opravy@bshg.com

TH Thailand, ราชอาณาจักรไทย
BSH Home Appliances Limited
Ital Thai Tower, 2034/31-39, 1st floor,
New Petchburi Road
Bangkapi, Huay Kwang
Bangkok, 10310
Tel.: 02 495 2424*
www.bosch-home.com/th
* Mo-Sat 8am to 6pm (exclude public holidays)

TJ Tadschikistan, Ҷумҳурии Тоҷикистон
P.E. Suhrob Muhitdinov
Shamsi street no: 67/A
Dushanbe
Tel.: 091 867 80 43
mailto:sino2003@list.ru

Vostok Co. Ltd.
Yakkacinarskaya street No: 144/4
Dushanbe
Tel.: 44 600 78 72
mailto:Lola.Mirzoeva@vostok.tj
www.volna.tj

TM Türkmenistan, Turkmenistan
Bayram Anna Yuryewna
Stariya marka, Atabeyeva str.
Spectrum mağaza
Ashgabat
Tel.: 012 26 94 16
mailto:steptm@mail.ru

TR Türkiye, Turkey
BSH Ev Aletleri Sanayi
ve Ticaret A.S.
Fatih Sultan Mehmet Mahallesi
Balkan Caddesi No: 51
34771 Ümraniye, Istanbul
Tel.: 0 216 444 6333*
mailto:careline.turkey@bshg.com
www.bosch-home.com/tr
* Çağrı merkezini sabit hatlardan aramanın bedeli şehir içi ücretlendirme, Cep telefonlarından ise kullanılan tarifeye gore değişkenlik göstermektedir

TW Taiwan, 台湾
我們期盼您不斷的鼓勵與指導，
任何咨詢或服務需求，歡迎洽詢客服專線
BSH Home Appliances Private Limited
台北市內湖區洲子街80號11樓
11F., No.80, Zhouzi St., Neihu Dist.
Taipei City 11493
Tel.: 0800 368 888
mailto:bshtzn-service@bshg.com
www.bosch-home.com.tw

UA Ukraine, Україна
ТОВ “БСХ Побутова Техніка”
тел.: 0 800 300 152*
mailto:BSH-serviceua@bshg.com
www.bosch-home.com.ua
* Безкоштовна Інфо-Лінія Пн-Пт з 9.00 до 18.00

UZ O‘zbekiston Respublikasi, Republic of Uzbekistan
Elektronik Magnat
Beruni street No: 5/6
Tashkent
Tel.: 712 156 333
mailto:magnat.service.uzb@gmail.com

XK Kosovo
Service-General SH.P.K.
rr.Magjistralja Ferizaj Prishtine
70000 Ferizaj
Tel.: 00381 (0) 290 330 723
mailto:servicegeneral527@gmail.com

XS Srbija, Serbia
BSH Kućni aparati d.o.o.
Milutina Milankovića br. 9ž
11070 Novi Beograd
Tel.: 011 353 70 08
mailto:informacije.servis-sr@bshg.com
www.bosch-home.rs

ZA South Africa
BSH Home Appliances (Pty) Ltd.
96 Fifteenth Road, Randjespark
1685 Midrand - Johannesburg
Tel.: 086 002 6724
mailto:bsh@iopen.co.za
mailto:appliianceserviceza@bshg.com
www.bosch-home.com/za

Thank you for buying a Bosch Home Appliance!

Register your new device on MyBosch now and profit directly from:

- **Expert tips & tricks for your appliance**
- **Warranty extension options**
- **Discounts for accessories & spare-parts**
- **Digital manual and all appliance data at hand**
- **Easy access to Bosch Home Appliances Service**

Free and easy registration – also on mobile phones:
www.bosch-home.com/welcome

Looking for help? You´ll find it here.

Expert advice for your Bosch home appliances, need help with problems or a repair from Bosch experts.
Find out everything about the many ways Bosch can support you:
www.bosch-home.com/service
Contact data of all countries are listed in the attached service directory.

Robert Bosch Hausgeräte GmbH
Carl-Wery-Straße 34
81739 München
GERMANY
www.bosch-home.com

8001180029 (000225)