BOSCH
Invented for life

	DFS067A51B (Available in Q2 2021) **$10,400** **60cm telescopic hood**
	60 cm · Energy A · EcoSilence Drive · 10 Year Warranty · Silence
Performance	• Suitable for exhaust or re-circulated air operation • 3 speeds plus intensive settings • EcoSilence Drive™ technology
Functions	• Push button electronic controls • 2 x 1.5W LED lights
Features	• Automatically run on for 10 minutes • Automatically switches back from intensive to normal setting
Design	• Slimline telescopic design • Hidden installation available
Technical information	• Extraction capacity: 728m³/h (EN 61591) • 120 or 150mm diameter pipe • Total connected load: 0.144kW (13A) • Appliances dimensions (H x W x D): 426 x 598 x 290 mm
Supplied accessories	• 2 dishwasher-safe metal grease filters • Design handle bar with logo
Optional accessories	• Charcoal recirculating kit (DSZ4565 Price: $1,000) • Lowering frame (DSZ4660 Price: $1,000)
Country of origin	• Germany

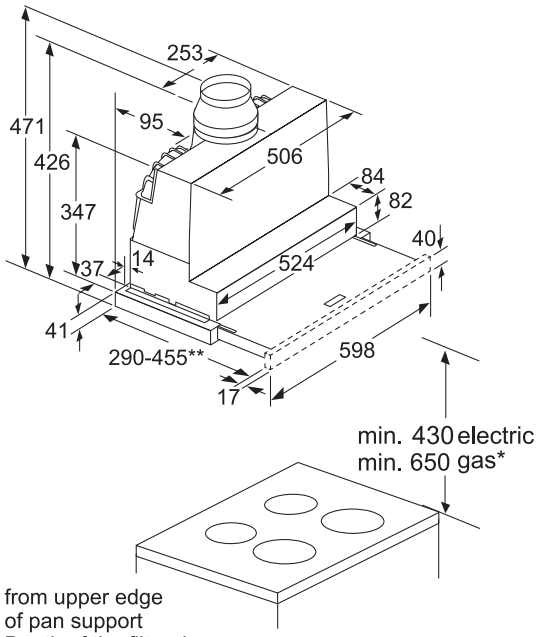

* from upper edge of pan support
** Depth of the filter drawer can be adjusted by up to 29 mm

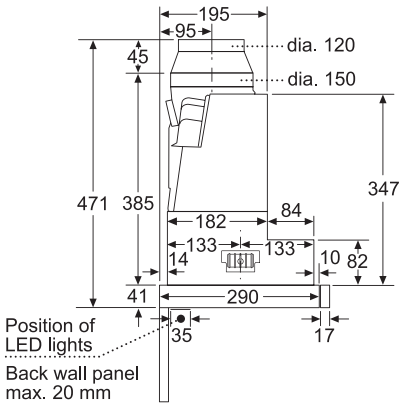

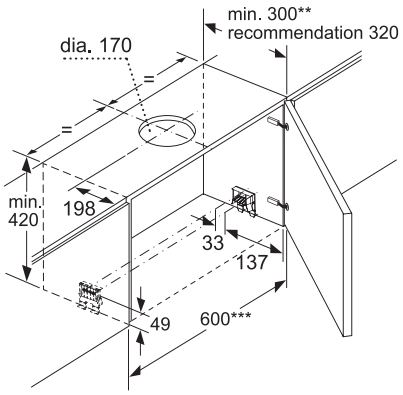

** min. 350 with Lowering Frame (DSZ4660)
*** 600 is cabinet exterior dimension. Cabinent interior dimension should range from 562 to 568

Measurements in mm

BSH Home Appliances Limited
Customer Contact Hotline: 2626 9655 (Hong Kong) / 0800 863 (Macau local call only)
www.bosch-home.com.hk

• Specifications and technical information are subject to change.
• Right of technical modification reserved, colours may vary slightly from illustrations.
©2021 by BSH Home Appliances Limited. Reproduction, complete or in part, only with the express permission of BSH.